INTERNATIONAL TECHNOLOGY CORPORATION

Project No. 519200
July 1995

00934
47

Final Report – Volume IX

Ash Landfill Immediate Response
Seneca Army Depot
Romulus, New York

Contract No. DACW45-94-D-0054
Delivery Order No. 01

Prepared for:
U.S. Army Corps of Engineers
Omaha District
215 N. 17th Street
Omaha, Nebraska 68102-4978

Prepared by:
IT Corporation
140 Allen's Creek Road
Suite 150
Rochester, NY 14618
(716) 271-6430

RESPONSIVE TO THE NEEDS OF ENVIRONMENTAL MANAGEMENT

Appendix J

On-Site Meteorological Data

FREQUENCY OF WIND SPEED AND WIND DIRECTION

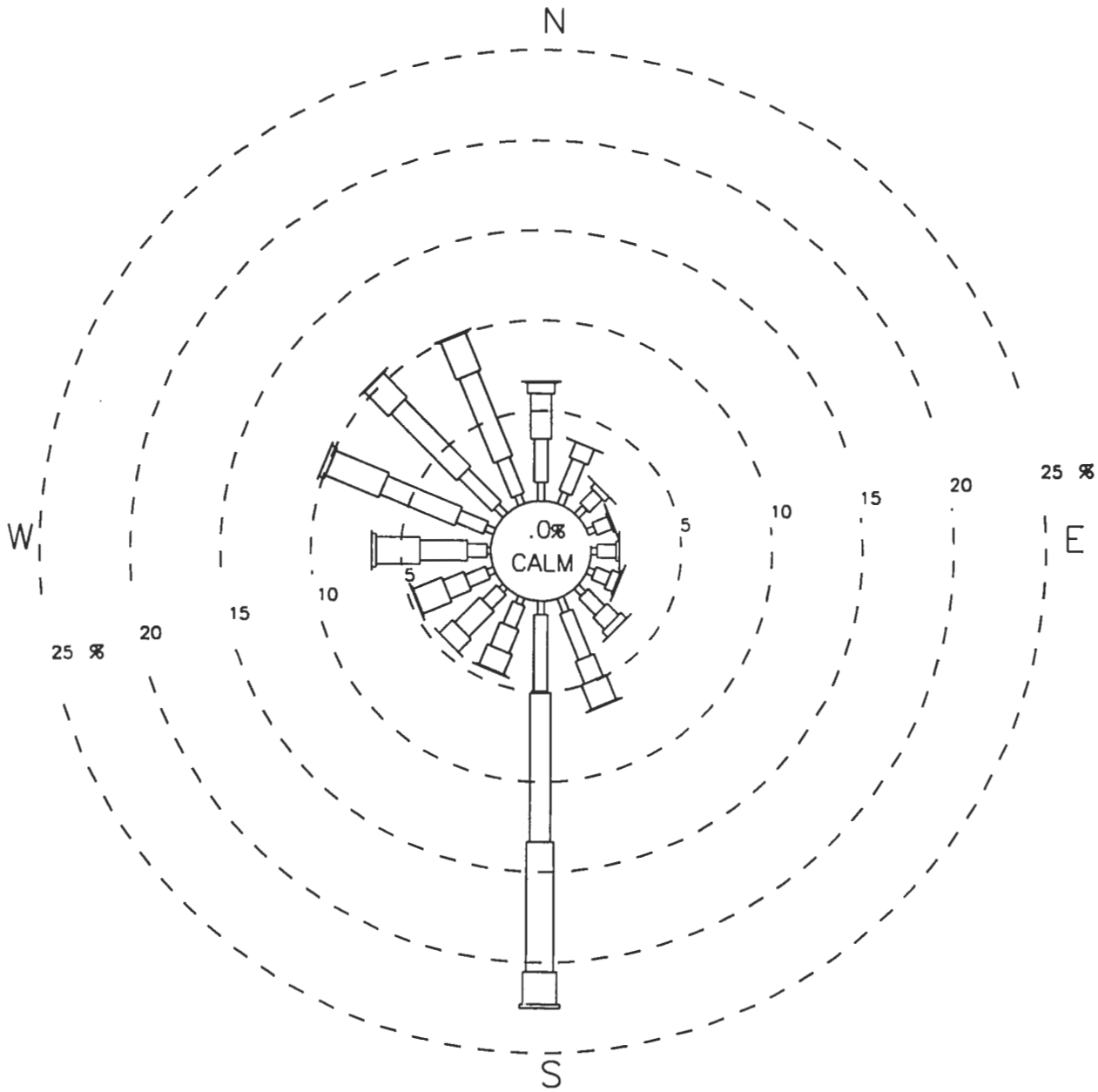

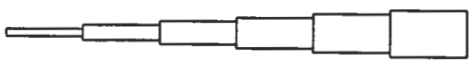

1-3	4-6	7-10	11-16	17-21	22-99
(9 %)	(28 %)	(37 %)	(23 %)	(3 %)	(0 %)

WIND SPEED SCALE (KNOTS)

NOTE – WIND DIRECTION IS THE DIRECTION WIND IS BLOWING FROM

SENECA ARMY DEPOT
ASH LANDFILL AREA
ROMULUS, NEW YORK
IT PROJECT NO. 519200
CUMULATIVE WINDROSE
FINAL REPORT– WINDROSE

FREQUENCY OF WIND SPEED AND WIND DIRECTION

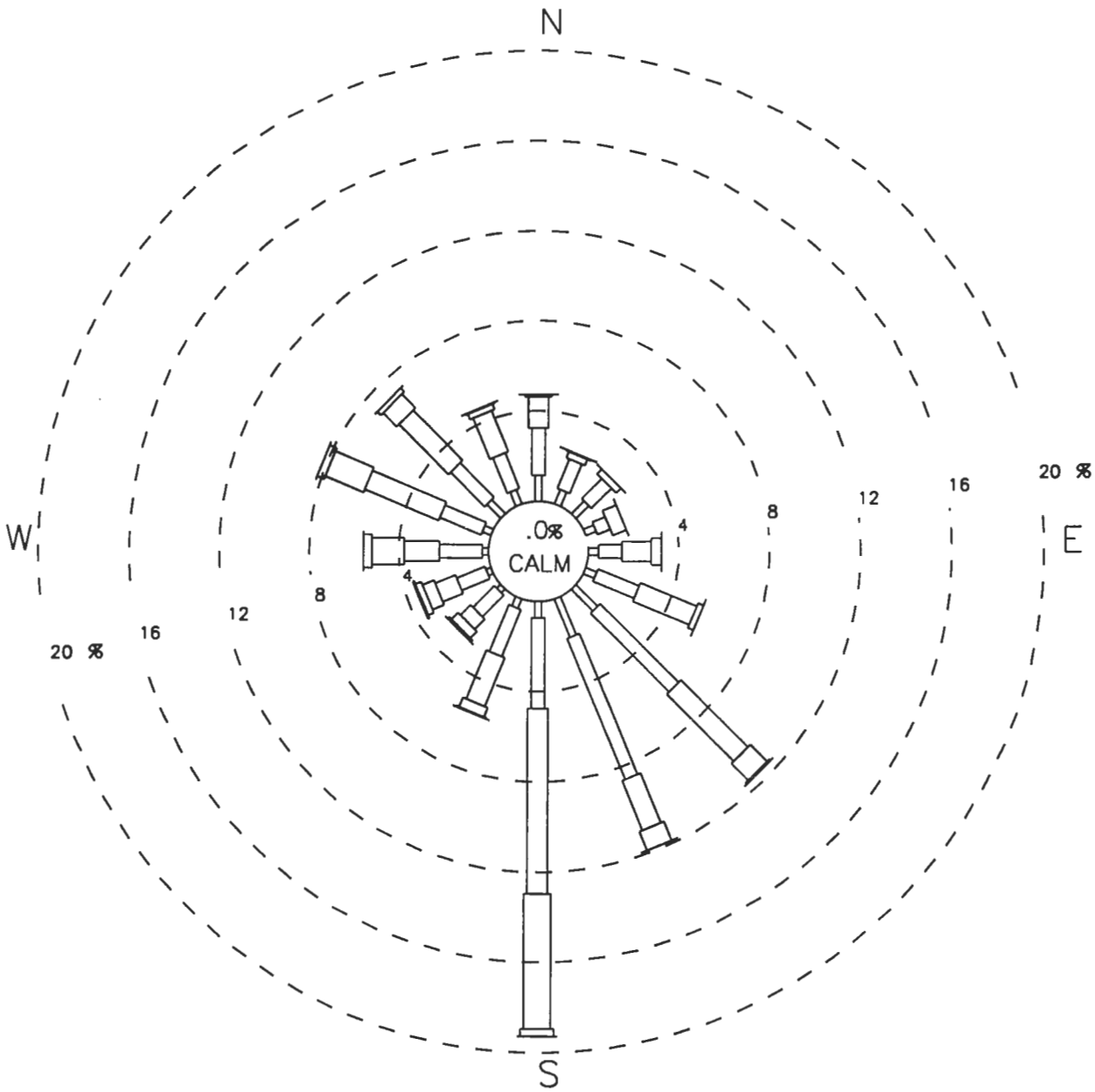

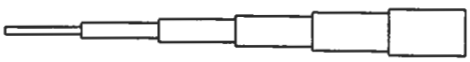

1-3 (11 %) 4-6 (37 %) 7-10 (35 %) 11-16 (16 %) 17-21 (2 %) 22-99 (0 %)

WIND SPEED SCALE (KNOTS)

NOTE – WIND DIRECTION IS THE DIRECTION WIND IS BLOWING FROM

SENECA ARMY DEPOT
ASH LANDFILL AREA
ROMULUS, NEW YORK
IT PROJECT NO. 519200
MID-PROJECT DATA
FINAL REPORT- WINDROSE

FREQUENCY OF WIND SPEED AND WIND DIRECTION

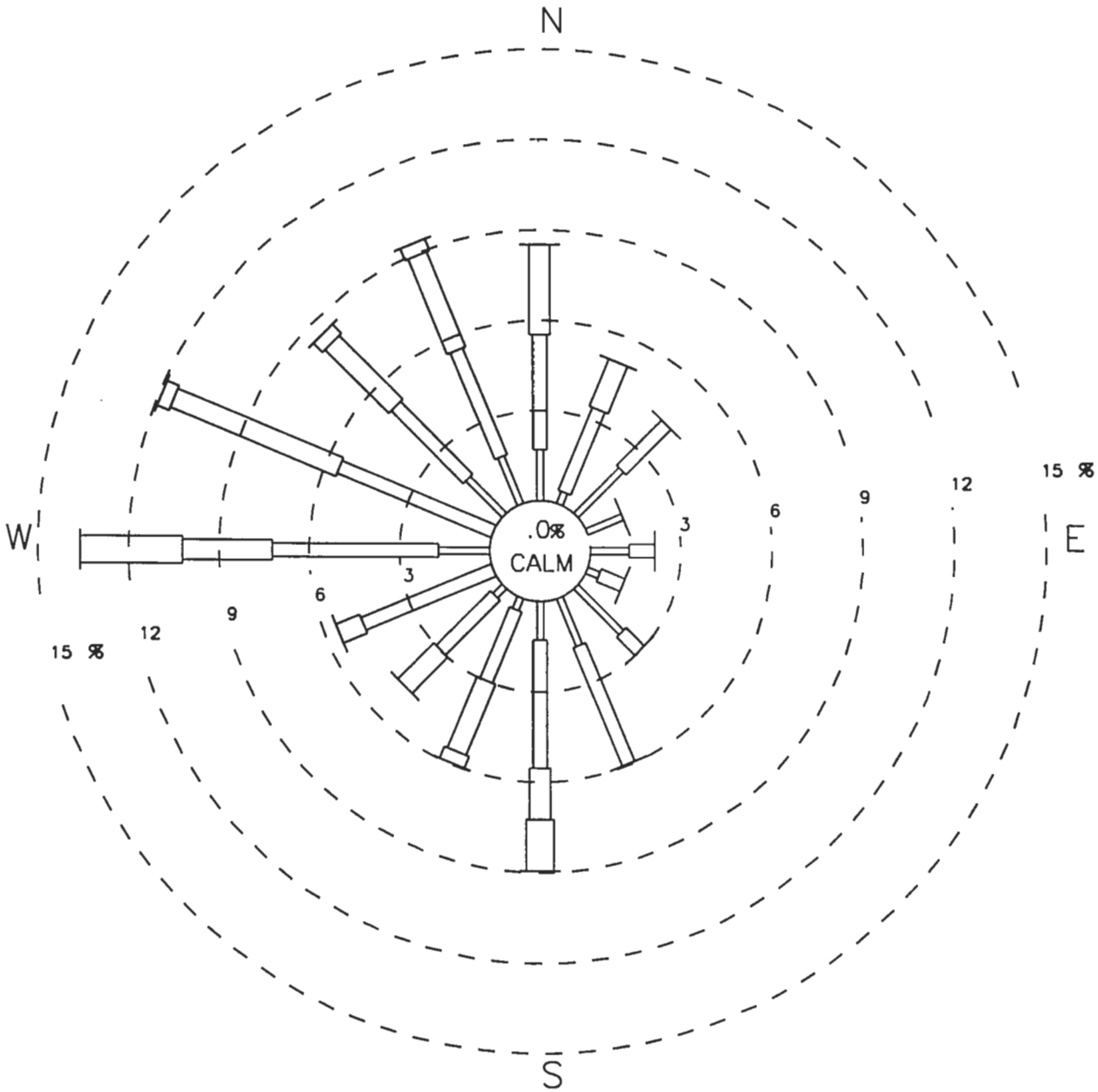

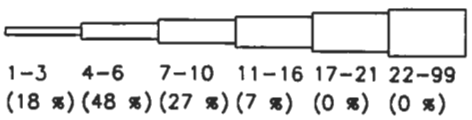

WIND SPEED SCALE (KNOTS)

NOTE – WIND DIRECTION IS THE DIRECTION WIND IS BLOWING FROM

SENECA ARMY DEPOT
ASH LANDFILL AREA
ROMULUS, NEW YORK
IT PROJECT NO. 519200
BASELINE DATA
FINAL REPORT– WINDROSE

Day	DATE JD	TIME 24H	WS MPH	WD Deg	SIGMA Deg	AT DegF	RH %	RN inch	BP inHg
28-Aug	240	1000	16.16	183.6	10.53	73.6	91.7	0 B	29.16
28	240	1100	14.54	179.6	9.4	74 (4)	91	0 B	29.15
28	240	1200	16.07	178.1	10.07	79.1 (4)	79.6	0 B	29.12
28	240	1300	14.17	194	12.45	80.1	73.3	0 B	29.12
28	240	1400	10.76	215.3	12.72	79	71.8	0 B	29.13
28	240	1500	10.54	203.6	15.86	75.7	83.7	0 B	29.07
28	240	1600	10.74	219.7	13.96	75.3	82.6	0 B	29.07
28	240	1700	11.33	200.5	12.84	71.9	91	0 B	29.09
28	240	1800	11.97	175.6	12.26	70.6	100.3	0 B	29.06
28	240	1900	11.17	192.1	10.65	70.9	100.3	0 B	29.05
28	240	2000	9.44	240.9	30.4	70.9	98.1	0 B	29.08
28	240	2100	3.133	320.1	25.45	67.92	99.6	0 B	29.12
28	240	2200	6.042	290.1	14.85	67.37	94.9	0 B	29.13
28	240	2300	8.45	294.4	14.99	65.8	90.9	0 B	29.13
29	241	0	7.83	300.1	17.22	63.83	87.5	0 B	29.14
29	241	100	6.404	279.5	13.73	61.81	90.9	0 B	29.16
29	241	200	7.31	275.2	14.21	60.43	91.7	0 B	29.16
29	241	300	5.98	274.4	15.2	58.58	90.4	0 B	29.16
29	241	400	5.026	269.6	13.28	56.56	93.7	0 B	29.15
29	241	500	5.779	265.9	11.95	55.59	93.5	0 B	29.15
29	241	600	5.96	258.6	13.8	54.74	94.7	0 B	29.17
29	241	700	6.392	259.6	15.12	56.63	89	0 B	29.21
29	241	800	6.547	269.2	19.71	60.46	79.5	0 B	29.24
29	241	900	8.43	289.6	21.19	62.82	73.2	0 B	29.25
29	241	1000	9.29	303	20.59	65.17	67.98	0 B	29.27
29	241	1100	9.47	297.1	22.23	66.97	61.56	0 B	29.28
29	241	1200	10.55	293.6	18.72	68.48	55.19	0 B	29.28
29	241	1300	10.59	289.8	22.31	69.74	52.05	0 B	29.27
29	241	1400	8.9	294.2	23.86	68.96	54.1	0 B	29.27
29	241	1500	10.19	284	16.65	69.15	53.53	0 B	29.26
29	241	1600	9.28	266.6	15.73	70.2	54.02	0 B	29.26
29	241	1700	8.34	261	15.52	69.35	57.13	0 B	29.25
29	241	1800	6.864	257.4	14.2	67.42	63.52	0 B	29.26
29	241	1900	5.343	250.2	13.02	64.71	72.4	0 B	29.25
29	241	2000	3.487	245.8	14.89	61.16	84.6	0 B	29.24
29	241	2100	4.302	229	13.83	61.24	87.8	0 B	29.25
29	241	2200	5.783	268.1	14.65	61.82	84.1	0 B	29.26
29	241	2300	6.646	294.2	14.95	61.17	81.4	0 B	29.28
30	242	0	5.62	291.1	15.33	59.19	88	0 B	29.3
30	242	100	4.76	284.4	15.33	57.61	92	0 B	29.31
30	242	200	4.784	275.8	14.69	56.31	94.6	0 B	29.31
30	242	300	5.775	271.4	13.8	55.61	91.1	0 B	29.32
30	242	400	5.704	274.1	15.34	54.76	88.5	0 B	29.33
30	242	500	3.158	231	18.27	52.04	94.9	0 B	29.34
30	242	600	4.2	256.3	20.26	51.5	95.1	0 B	29.36
30	242	700	5.723	256.5	18.43	55.58	84.9	0 B	29.41
30	242	800	7.21	263	15.98	58.88	77.7	0 B	29.45
30	242	900	7.36	276.8	20.36	62.3	71.1	0 B	29.47
30	242	1000	7.65	296.7	22.48	65.41	64.76	0 B	29.48
30	242	1100	8.23	283.2	21.29	67.41	57.94	0 B	29.48
30	242	1200	7.96	281.8	25.02	69.4	50.73	0 B	29.48
30	242	1300	7.28	311	24.93	71	48.08	0 B	29.47
30	242	1400	8.93	309.7	20.46	71.5	42.16	0 B	29.46
30	242	1500	7.75	306.2	18.85	72.4	40.86	0 B	29.45
30	242	1600	6.308	296.9	23.97	72.2	42.24	0 B	29.45
30	242	1700	4.235	313.8	15.96	71.1	47.32	0 B	29.44
30	242	1800	2.348	337	10.16	67.56 (4)	66.68	0 B	29.42
30	242	1900	4.457	98.9	6.352	61.71 (4)	96.3	0 B	29.4

Day	DATE JD	TIME 24H	WS MPH	WD Deg	SIGMA Deg	AT DegF	RH %	RN inch	BP inHg
30	242	2000	4.08	117	11.17	58.8	97.1	0 B	29.38
30	242	2100	3.22	134	12.12	57.71	95	0 B	29.38
30	242	2200	4.469	160.8	11.79	59.91	89.2	0 B	29.38
30	242	2300	6.442	168.7	10.18	60.35	92.7	0 B	29.37
31	243	0	6.924	170.9	10.4	60.6	94.7	0 B	29.35
31	243	100	6.113	168.1	11.07	60.8	92.1	0 B	29.34
31	243	200	3.826	161.1	20.58	60.23	90.7	0 B	29.32
31	243	300	7.25	167.3	11.96	59.84	95.5	0 B	29.3
31	243	400	5.904	170.2	13.25	58.8	100.3	0 B	29.3
31	243	500	4.457	102.2	40.14	57.3	100.3	0 B	29.28
31	243	600	4.797	100.7	22.19	57.16	100.3	0 B	29.27
31	243	700	5.1	117.2	10.99	57.66	100.3	0 B	29.27
31	243	800	5.407	131.7	12.59	58.25	100.3	0 B	29.25
31	243	900	5.593	124.7	10.95	59.63	100.3	0 B	29.24
31	243	1000	10.34	175.9	10.64	62.85	100.3	0 B	29.24
31	243	1100	11.54	179.8	9.67	65.09	97.5	0 B	29.24
31	243	1200	9	174.2	12.84	67.88	91.7	0 B	29.24
31	243	1300	8.3	172.9	12.35	70.6	86	0 B	29.24
31	243	1400	7.86	182.2	10.09	69.98	91.2	0 B	29.24
31	243	1500	3.879	178.9	15.48	67.57	100.1	0 B	29.23
31	243	1600	2.151	84.4	32.66	67.46	100.3	0 B	29.22
31	243	1700	2.505	91.1	17.7	70.7	98	0 B	29.21
31	243	1800	3.069	103.9	13.5	71.3	97.2	0 B	29.21
31	243	1900	3.322	207.2	25.03	68.37	100.2	0 B	29.21
31	243	2000	5.448	281.4	23	67.18	100.3	0 B	29.22
31	243	2100	4.591	282.7	12.87	66.51	100.4	0 B	29.24
31	243	2200	3.031	308.4	25.64	64.63	100.3	0 B	29.23
31	243	2300	1.658	187.3	13.63	62.09	100.3	0 B	29.22
1-Sep	244	0	1.726	176.7	27.35	61.47	100.3	0 B	29.22
1	244	100	3.219	274.2	40.57	62.67	100.3	0 B	29.23
1	244	200	3.387	268.4	19.84	60.99	100.3	0 B	29.23
1	244	300	4.954	252.6	21.46	61.89	100.4	0 B	29.24
1	244	400	6.648	271.3	13.66	62.83	100.4	0 B	29.25
1	244	500	9.28	269	14.72	62.07	100.4	0 B	29.26
1	244	600	6.669	271.4	19.34	60.83	100.4	0 B	29.28
1	244	700	8.71	291.8	15.68	61.16	100.4	0 B	29.31
1	244	800	8.96	328.4	12.38	60.3	100.4	0 B	29.34
1	244	900	10.2	330.8	12.47	58.91	100.4	0 B	29.37
1	244	1000	10.41	336.6	12.13	59.52	100.4	0 B	29.4
1	244	1100	11.08	329.1	13.45	60.04	97.4	0 B	29.42
1	244	1200	11.51	306.4	14.53	61.67	88.5	0 B	29.45
1	244	1300	12.02	310.1	17.11	63.49	84.4	0 B	29.46
1	244	1400	11.62	326.9	17.07	64.96	79.3	0 B	29.47
1	244	1500	10.65	331.7	14.83	64.37	76.5	0 B	29.46
1	244	1600	9.42	325.6	15.77	65.02	71.8	0.03 B	29.46
1	244	1700	9.56	326.1	15.07	65.2	67.88	0 B	29.47
1	244	1800	6.95	337.3	11.41	62.27 (4)	73.3	0 B	29.47
1	244	1900	4.244	346.2	8.33	56.55 (4)	90.7	0 B	29.45
1	244	2000	3.953	8.13	9.12	51.87	100.2	0 B	29.45
1	244	2100	1.43	322.7	19.94	48.75	100.3	0 B	29.45
1	244	2200	1.709	259.2	25.79	48.31	100.3	0 B	29.46
1	244	2300	4.233	297.4	13.3	53.3	99.4	0 B	29.48
2	245	0	3.54	296.4	12.7	50.67	100.4	0 B	29.5
2	245	100	3.961	301.6	10.14	49.62	100.3	0 B	29.5
2	245	200	3.593	307.3	11.71	49.76	100.3	0 B	29.5
2	245	300	4.092	318.5	13.8	49.1	100.3	0 B	29.51
2	245	400	3.43	333.1	17.9	47.44	100.3	0 B	29.51
2	245	500	3.45	54.69	9.95	45.24	100.3	0 B	29.52

Day	DATE JD	TIME 24H	WS MPH	WD Deg	SIGMA Deg	AT DegF	RH %	RN inch	BP inHg
2	245	600	2.71	49.49	10.19	46.29	100.4	0 B	29.54
2	245	700	2.971	354.7	11.47	49.81 (4)	100.3	0 B	29.57
2	245	800	4.536	341.5	15.55	55.51 (4)	96.8	0 B	29.62
2	245	900	5.634	359.7	17.44	58.16 (4)	85.4	0 B	29.64
2	245	1000	3.929	26.81	50.19	63.24 (4)	63.73	0 B	29.67
2	245	1100	5.024	334.2	37.04	64.43	60.11	0 B	29.67
2	245	1200	6.329	318.7	25.38	64.32	57.6	0 B	29.66
2	245	1300	6.762	292	25.84	65.71	56.87	0 B	29.64
2	245	1400	8.62	8.76	22.08	66.32	57.91	0 B	29.64
2	245	1500	6.685	19.92	16.72	63.46	64.34	0 B	29.62
2	245	1600	6.517	319.6	18.75	64.27	59.8	0 B	29.61
2	245	1700	4.186	340.5	15.17	63.15	66.92	0 B	29.61
2	245	1800	5.645	347.1	20.13	62.28 (4)	70.4	0 B	29.61
2	245	1900	4.822	15.15	6.229	57.19 (4)	84.4	0 B	29.6
2	245	2000	3.407	64.34	8.97	48.97 (4)	99.7	0 B	29.58
2	245	2100	2.383	71.7	11.55	45.62	100.3	0 B	29.59
2	245	2200	2.957	72.2	7.33	44.31	100.3	0 B	29.59
2	245	2300	2.83	148.2	11.77	44.46	100.4	0 B	29.61
3	246	0	3.935	164.5	8.87	45.18	100.4	0 B	29.61
3	246	100	3.764	174.4	8.43	47.44	100.4	0 B	29.61
3	246	200	4.111	169.7	9.53	47.82	100.4	0 B	29.62
3	246	300	3.688	165.3	9.56	47.08	100.4	0 B	29.62
3	246	400	4.45	168.6	10.82	46.64	100.4	0 B	29.62
3	246	500	4.064	163.1	12.05	47.32	100.4	0 B	29.62
3	246	600	5.293	128	10.41	47.18	100.3	0 B	29.63
3	246	700	4.397	161.1	12.93	48.88	100.3	0 B	29.66
3	246	800	6.221	175.8	11.44	51.34	100.4	0 B	29.68
3	246	900	7.33	179.1	11.79	54.01 (4)	100.3	0 B	29.68
3	246	1000	5.824	191.5	23.58	59.15 (4)	87.7	0 B	29.72
3	246	1100	3.961	189.4	48.62	65.95 (4)	66.84	0 B	29.74
3	246	1200	4.851	155.7	38	68.7	56.99	0 B	29.73
3	246	1300	4.42	1.849	34.83	68.05	58	0 B	29.71
3	246	1400	4.77	39.21	35.82	68.97	51.32	0 B	29.7
3	246	1500	5.546	2.701	49.38	70.5	44.38	0 B	29.69
3	246	1600	9.15	8.38	15.68	67.76	57.73	0 B	29.68
3	246	1700	7.11	16.98	15.56	65.59	59.29	0 B	29.67
3	246	1800	5.544	2.52	11.85	64.93 (4)	65.65	0 B	29.66
3	246	1900	4.778	16.56	5.288	58.46 (4)	82.8	0 B	29.65
3	246	2000	5.686	34.27	5.67	53.15 (4)	98.2	0 B	29.64
3	246	2100	5.844	44.35	6.516	52.27	100.3	0 B	29.64
3	246	2200	4.411	47.84	7.02	50.69	100.3	0 B	29.64
3	246	2300	0.732	135.7	7.47	47	100.3	0 B	29.64
4	247	0	1.815	46.49	12.85	45.13	100.3	0 B	29.64
4	247	100	3.069	52.16	8.99	44.39	100.4	0 B	29.63
4	247	200	2.706	107.6	9.1	44.5	100.4	0 B	29.63
4	247	300	1.717	98.2	14.46	43.53	100.4	0 B	29.62
4	247	400	1.895	52.85	16.42	44.78	100.4	0 B	29.62
4	247	500	2.708	96	18.17	44.41	100.4	0 B	29.62
4	247	600	4.015	44.46	7.6	46.83	100.4	0 B	29.65
4	247	700	2.484	95.2	11.99	48.86	100.4	0 B	29.68
4	247	800	2.327	338.4	18.48	53.13	100.3	0 B	29.72
4	247	900	3.326	309.9	25.91	57.05	98	0 B	29.74
4	247	1000	4.316	350	40.49	61.97	85.7	0 B	29.75
4	247	1100	7.44	19.96	21.4	65.35	69.88	0 B	29.74
4	247	1200	7.49	18.51	23.14	67.22	65.11	0 B	29.73
4	247	1300	6.54	12.56	24.4	67.38	58.96	0 B	29.71
4	247	1400	8.79	359.1	18.68	67.67	57.18	0 B	29.7
4	247	1500	8.26	358.2	16.34	65.22	63.72	0 B	29.67

Day	DATE JD	TIME 24H	WS MPH	WD Deg	SIGMA Deg	AT DegF	RH %	RN inch	BP inHg
4	247	1600	10.52	12.86	12.44	67.05	59.28	0 B	29.66
4	247	1700	11.11	4.149	11.33	65.25	63.47	0 B	29.65
4	247	1800	8.91	1.876	9.68	62.16 (4)	68.48	0 B	29.64
4	247	1900	5.625	2.075	5.735	55.57 (4)	85.3	0 B	29.62
4	247	2000	3.344	10.88	11.11	49.67 (4)	98.5	0 B	29.6
4	247	2100	2.583	7.43	8.85	45.27	100.3	0 B	29.59
4	247	2200	2.322	24.3	14.57	44.6	100.3	0 B	29.58
4	247	2300	1.007	128.8	8.03	43.13	100.4	0 B	29.57
5	248	0	0.577	264.7	12.39	43.27	100.4	0 B	29.56
5	248	100	2.406	172.3	7	42.31	100.4	0 B	29.55
5	248	200	1.918	164.7	9.59	42.14	100.4	0 B	29.54
5	248	300	4.906	122	12.66	42.77	100.3	0 B	29.53
5	248	400	2.701	146.5	20.73	41.26	100.3	0 B	29.52
5	248	500	3.377	184.9	11.65	41.78	100.3	0 B	29.51
5	248	600	4.301	166.4	8.82	44.49	100.3	0 B	29.52
5	248	700	2.253	132.3	16.37	46.94	100.4	0 B	29.55
5	248	800	2.516	209.7	24.96	50.73 (4)	100.3	0 B	29.59
5	248	900	3.264	332.1	31.73	57.22 (4)	85.9	0 B	29.62
5	248	1000	3.94	14.86	48.12	61.91	74.7	0 B	29.63
5	248	1100	5.617	12.13	30.02	64.88	61.34	0 B	29.61
5	248	1200	5.21	347.9	55.19	67.97	49.1	0 B	29.58
5	248	1300	6.426	305.8	38.5	66.81	53.03	0 B	29.55
5	248	1400	7.18	312.3	36.9	68.1	50.16	0 B	29.52
5	248	1500	8.7	335.8	21.72	67.76	53.25	0 B	29.49
5	248	1600	8.67	346.4	14.9	65.19	60.82	0 B	29.48
5	248	1700	7.48	352.2	10.65	63.64	65.8	0 B	29.46
5	248	1800	6.362	339.3	10.8	63.45 (4)	64.47	0 B	29.45
5	248	1900	5.918	353.7	5.171	56.53 (4)	82.1	0 B	29.42
5	248	2000	5.521	3.177	4.846	51.8	93.8	0 B	29.39
5	248	2100	3.051	325.3	12.56	50.46 (4)	94.9	0 B	29.38
5	248	2200	1.112	8.14	10.21	45.31 (4)	100.3	0 B	29.36
5	248	2300	2.003	168.4	29.39	43.76	100.4	0 B	29.36
6	249	0	3.144	131.5	34.92	43.75	100.4	0 B	29.33
6	249	100	3.555	191	12.08	44.59	100.4	0 B	29.33
6	249	200	4.605	181.4 (2)	7.29	46.85	100.4	0 B	29.32
6	249	300	4.172	180.6 (2)	9.35	46.19	100.4	0 B	29.31
6	249	400	4.123	180.4 (2)	14.15	46.39	100.4	0 B	29.3
6	249	500	4.384	190.1	15.39	46.09	100.4	0 B	29.29
6	249	600	4.577	193.8	18.58	46.26	100.4	0 B	29.29
6	249	700	4.588	197	15.1	47.7	100.4	0 B	29.3
6	249	800	8.73	185.1	10.02	52.29	100.3	0 B	29.32
6	249	900	6.914	192.8	16.13	57.24 (4)	91.5	0 B	29.34
6	249	1000	4.252	191.7	34.93	63.64 (4)	72.9	0 B	29.37
6	249	1100	5.169	269.9	46.77	67.34	51.95	0 B	29.36
6	249	1200	5.474	297.1	41.37	67.42	50.93	0 B	29.33
6	249	1300	5.098	310.8	46.67	69.33	47.76	0 B	29.31
6	249	1400	6.293	330.1	33.96	70.7	45.17	0 B	29.31
6	249	1500	6.008	316.5	26.12	69.35	45.4	0 B	29.29
6	249	1600	8.11	282.6	18.06	69.37	41.52	0 B	29.27
6	249	1700	5.664	294	16.63	66.75	45.48	0 B	29.26
6	249	1800	5.64	283.4	14.21	64.98	53.02	0 B	29.25
6	249	1900	5.775	292.8	13.06	62.44	65.03	0 B	29.24
6	249	2000	4.148	337.1	12.86	57.86	93.8	0 B	29.24
6	249	2100	4.498	88	11.42	55.92	100.3	0 B	29.23
6	249	2200	4.685	130.2	10.46	55.81	100.3	0 B	29.22
6	249	2300	4.839	162.4	9.39	56.69	100.3	0 B	29.21
7	250	0	6.124	178.5	9.5	57.23	100.3	0 B	29.2
7	250	100	8.36	184.7	10.48	58.74	99.3	0 B	29.19

Day	DATE JD	TIME 24H	WS MPH	WD Deg	SIGMA Deg	AT DegF	RH %	RN inch	BP inHg
7	250	200	7.19	205.2	11.8	59.12	96.4	0 B	29.18
7	250	300	6.749	212	10.7	59.23	96.7	0 B	29.18
7	250	400	6.538	230.9	9.3	59.21	100.3	0 B	29.18
7	250	500	5.868	225.2	10.06	59.26	100.3	0 B	29.19
7	250	600	4.625	238.4	13.43	57.62	100.3	0 B	29.2
7	250	700	4.271	248.4	16.66	58.73	100.3	0 B	29.23
7	250	800	8.05	254	18.52	61.84	90.9	0 B	29.26
7	250	900	13.35	268.5	14.75	63.2	80.7	0 B	29.28
7	250	1000	11.94	272	16.57	64.4	78.3	0 B	29.29
7	250	1100	12.99	276.2 (2)	16.06	66.64	71.9	0 B	29.3
7	250	1200	12.74	276.5 (2)	17.86	67.22	69.09	0 B	29.31
7	250	1300	14.14	276.4 (2)	17.3	68.3	65.23	0 B	29.3
7	250	1400	15.08	270.9	16.16	69.53	61.05	0 B	29.31
7	250	1500	13.16	278.8	16.89	68.83	60.07	0 B	29.31
7	250	1600	11.66	279.7	17.71	68.31	60.78	0 B	29.31
7	250	1700	11.74	288.6	17.64	68.01	54.47	0 B	29.31
7	250	1800	9.81	275.3	16.32	66.5	57.2	0 B	29.32
7	250	1900	4.952	246.6	12.63	61.79	72.6	0 B	29.31
7	250	2000	4.507	228.6	12.34	58.16	85	0 B	29.31
7	250	2100	5.963	223.8	13.69	58.38	85.8	0 B	29.31
7	250	2200	7.43	231.4	13.97	59.3	84.4	0 B	29.32
7	250	2300	6.166	219.3	14.13	58.3	88.7	0 B	29.32
8	251	0	7.22	232.9	15.15	59.59	83.9	0 B	29.33
8	251	100	4.431	256.3	20.55	57.05	96.6	0 B	29.35
8	251	200	7.5	188.6	13.38	55.75	100.3	0 B	29.32
8	251	300	8.45	198.2	12.09	56.81	100.3	0 B	29.33
8	251	400	11.25	201.2	13.14	57.45	100.3	0 B	29.33
8	251	500	10.61	202.5	12.08	58.26	99.6	0 B	29.32
8	251	600	7.58	192.1	11.39	57.27	100.3	0 B	29.33
8	251	700	9.23	201.8	11.76	58.5	100.3	0 B	29.35
8	251	800	9.6	213	12.71	61.86 (4)	94.8	0 B	29.37
8	251	900	9.59	235.1	14.55	66.88 (4)	82	0 B	29.38
8	251	1000	12.36	259	14.13	70.8	69.64	0 B	29.4
8	251	1100	15.08	262.1	13.85	72.6	64.87	0 B	29.39
8	251	1200	15.11	264.2	14.46	74.2	62.18	0 B	29.39
8	251	1300	14.08	261.2	13.89	75.4	59.99	0 B	29.38
8	251	1400	11.76	270.8	14.62	75.2	59.58	0 B	29.37
8	251	1500	8.83	319	21.66	74.1	63.9	0 B	29.36
8	251	1600	5.406	9.99	22.57	74.3 (4)	67.44	0 B	29.35
8	251	1700	10.44	7.07	18.37	63.53 (4)	92.9	0 B	29.35
8	251	1800	4.811	105.7	25.47	62.54	99.8	0 B	29.33
8	251	1900	2.52	139.6	20.52	60.92	100.3	0 B	29.33
8	251	2000	4.245	151.7	9.67	60.75	100.3	0 B	29.33
8	251	2100	5.337	171.1	13.3	61.11	100.4	0 B	29.33
8	251	2200	7.31	175	8.16	61.82	100.4	0 B	29.32
8	251	2300	8.7	177.1	8.31	62.04	98.9	0 B	29.31
9	252	0	8.18	172	11.25	63.31	88.6	0 B	29.31
9	252	100	7.19	176.4	10.33	63.99	89.4	0 B	29.3
9	252	200	5.716	326	57.1	63.64	87.7	0 B	29.31
9	252	300	5.387	181	18.36	61.2	92.4	0 B	29.28
9	252	400	7.66	171.9	8.82	61.37	93.4	0 B	29.27
9	252	500	6.768	182.6	11.52	61.27	98.7	0 B	29.28
9	252	600	6.684	214.6	12.84	61.68	97.7	0 B	29.27
9	252	700	6.128	259.7	28.37	61.89	98.6	0 B	29.3
9	252	800	5.815	256.7	14.96	63.44	97.1	0 B	29.32
9	252	900	9.83	282.2	17.44	67.27	85.3	0 B	29.37
9	252	1000	8.74	281.4	19.42	69.45	69.15	0 B	29.38
9	252	1100	8.73	266.7	20.45	72	56.17	0 B	29.38

Day	DATE JD	TIME 24H	WS MPH	WD Deg	SIGMA Deg	AT DegF	RH %	RN inch	BP inHg
9	252	1200	10.07	306.6	19.83	73.3	55.51	0 B	29.38
9	252	1300	9.82	317.9	18.1	71.3	62.73	0 B	29.37
9	252	1400	9.9	312.1	15.85	73.2	58.04	0 B	29.36
9	252	1500	10.59	325.2	17.25	72.7	58.41	0 B	29.35
9	252	1600	11.09	350.3	13.46	70.6	60.27	0 B	29.34
9	252	1700	9.06	351.6	11.97	69.32 (4)	61.58	0 B	29.35
9	252	1800	7.32	349.7	7.8	64.02 (4)	70.3	0 B	29.34
9	252	1900	6.254	351.5	7.76	60.14	84	0 B	29.33
9	252	2000	5.561	338.8	9.86	59.87	83.5	0 B	29.35
9	252	2100	4.595	320.3	11.11	57.61	90.2	0 B	29.36
9	252	2200	4.683	312.4	12.7	57.35	88.9	0 B	29.37
9	252	2300	6.124	310.1	15.03	57.85	81.9	0 B	29.38
10	253	0	5.436	312.9	12.36	56.17	88	0 B	29.39
10	253	100	4.44	343.4	14.38	53.83	97.7	0 B	29.39
10	253	200	3.694	335.5	8.72	51.88	100.3	0 B	29.39
10	253	300	3.297	350.3	14.54	50.21	100.3	0 B	29.39
10	253	400	2.675	341.2	10.69	48.65	100.4	0 B	29.4
10	253	500	2.119	347.5	7.02	44.87	100.3	0 B	29.4
10	253	600	3.124	322.9	9.31	44.89	100.4	0 B	29.42
10	253	700	3.328	318.3	11.23	48.68 (4)	100.4	0 B	29.45
10	253	800	6.69	316.9	14.9	55.66 (4)	89.7	0 B	29.51
10	253	900	9.53	326.5	16.25	58.46	80.9	0 B	29.54
10	253	1000	10.22	315.7	19.58	59.62	73.8	0.01 B	29.54
10	253	1100	11.12	325.8	18.2	60.46	66.31	0 B	29.55
10	253	1200	11.06	325.9	20.09	61.25	64.57	0 B	29.54
10	253	1300	12.26	319	16.69	62.39	58.97	0 B	29.55
10	253	1400	12.39	327.8	17.49	63.52	56.61	0 B	29.55
10	253	1500	12.9	329.4	16.95	62.52	56.9	0 B	29.54
10	253	1600	11.25	336.1	19.7	61.53	58.97	0 B	29.54
10	253	1700	10.1	340.4	13.11	61.1	60.82	0 B	29.53
10	253	1800	7.83	323.4	15.25	60.42 (4)	61.97	0 B	29.54
10	253	1900	4.527	340	10.68	54.35 (4)	76.4	0 B	29.51
10	253	2000	0.702	0.419	5.431	49.35	98.3	0 B	29.49
10	253	2100	3.009	274.3	17.85	51.85	98	0 B	29.51
10	253	2200	3.061	287.9	13.41	52.78	93	0 B	29.51
10	253	2300	3.416	282	11.65	51.68	95.8	0 B	29.5
11	254	0	3.681	286.9	19.03	52.72	95.5	0 B	29.51
11	254	100	4.708	320.1	10.89	53.42	95	0 B	29.53
11	254	200	3.701	328.7	11	52.54	99.8	0 B	29.52
11	254	300	5.169	332.8	11.06	52.88	96.1	0 B	29.52
11	254	400	3.995	320.1	11.04	52.4	95.9	0 B	29.52
11	254	500	5.066	316.6	12.86	52.97	93.2	0 B	29.53
11	254	600	4.699	316.5	12.14	51.48	97.3	0 B	29.54
11	254	700	5.071	320.2	11.85	50.99	99.5	0 B	29.56
11	254	800	8.7	319	14.57	55.58	90.8	0 B	29.59
11	254	900	10.5	327.5	15.93	57.43	83.4	0 B	29.6
11	254	1000	9.43	325.8	15.15	57.63	76.7	0 B	29.6
11	254	1100	9.45	329.2	15.28	57.4	74.7	0 B	29.6
11	254	1200	10.59	332.1	15.64	58.99	70.3	0 B	29.6
11	254	1300	10.55	321.9	16.3	60.17	68.39	0 B	29.61
11	254	1400	10.33	325.6	16.82	60.48	68.46	0 B	29.6
11	254	1500	10.15	320.7	15.11	60.77	68.73	0 B	29.59
11	254	1600	9.32	324	16.58	61.41	69.86	0 B	29.59
11	254	1700	8.28	312.2	16.5	61.11	69.41	0 B	29.58
11	254	1800	6.382	329.6	14.16	58.58	76.6	0 B	29.56
11	254	1900	3.484	303.1	12.21	53.85 (4)	88.1	0 B	29.54
11	254	2000	1.678	323.2	15.9	47.53 (4)	99.9	0 B	29.52
11	254	2100	2.214	169.6	9.21	44.17	100.3	0 B	29.52

Day	DATE JD	TIME 24H	WS MPH	WD Deg	SIGMA Deg	AT DegF	RH %	RN inch	BP inHg
11	254	2200	1.592	177.6	18.5	44.92	100.4	0 B	29.53
11	254	2300	1.856	194.5	29.07	44.07	100.4	0 B	29.53
12	255	0	2.298	171.1	12.52	44.52	100.4	0 B	29.52
12	255	100	2.954	159.5	17.08	43.94	100.4	0 B	29.5
12	255	200	5.245	184.2	9.73	48.28	100.4	0 B	29.5
12	255	300	4.63	201.2	26.92	49.48	100.4	0 B	29.51
12	255	400	5.758	186.9	12.06	49.52	100.3	0 B	29.51
12	255	500	5.434	187.6	10.28	49.14	100.3	0 B	29.54
12	255	600	4.471	190.3	12.23	48.1	100.3	0 B	29.55
12	255	700	6.038	203.3	23.05	50.37	100.3	0 B	29.56
12	255	800	7.48	192.6	12.91	54.2	100.4	0 B	29.6
12	255	900	6.654	199.1	15.36	58.29	94.8	0 B	29.61
12	255	1000	5.657	196.9	23.73	62.91	82.7	0 B	29.61
12	255	1100	7.51	304.1	28.16	67.48	71.5	0 B	29.6
12	255	1200	9.23	305.2	20.03	69.4	63.3	0 B	29.58
12	255	1300	8.51	302.7	24.51	71.9	56.29	0 B	29.56
12	255	1400	7.55	308.8	20.87	71.7	63.16	0 B	29.55
12	255	1500	6.155	299.7	17.28	71.1	67.6	0 B	29.53
12	255	1600	6.122	282.5	17.71	71.4	68.56	0 B	29.51
12	255	1700	7.72	267.1	14.87	73.3	66.17	0 B	29.5
12	255	1800	5.51	270.5	13.77	71.2	72.2	0 B	29.49
12	255	1900	3.821	262.3	11.25	66.27	85.7	0 B	29.47
12	255	2000	4.492	206.4	18.9	62.28	98.3	0 B	29.45
12	255	2100	5.197	196.6	11.68	62.56	99.1	0 B	29.44
12	255	2200	5.935 (1)	183.3	8.82	61.15	100.4	0 B	29.44
12	255	2300	6.031 (1)	189.1	9.4	61.87	100.3	0 B	29.44
13	256	0	5.98 (1)	201	10.34	61.8	100.4	0 B	29.44
13	256	100	7.45	198.8	11.68	62.36	100	0 B	29.43
13	256	200	7.93	195.5	10.79	62.65	97	0 B	29.41
13	256	300	8.88	190.7	10.26	63.63	92.2	0 B	29.41
13	256	400	8.74	189.4	10.2	63.78	91	0 B	29.4
13	256	500	7.84	192.7	10.57	63.98	93.6	0 B	29.41
13	256	600	6.31	198.9	10.61	63.83	93.4	0 B	29.42
13	256	700	8	208.9	11.32	64.79	90	0 B	29.43
13	256	800	8.36	212	10.71	66.85	85.5	0 B	29.44
13	256	900	8.35	208	10.71	69.07	82.2	0 B	29.45
13	256	1000	9.04	204.9	11.16	72.6	75.6	0 B	29.47
13	256	1100	8.74	200.8	11.61	75.6	71.6	0 B	29.46
13	256	1200	6.698	240.9	19.07	79.2	65.79	0.02 B	29.45
13	256	1300	7.52	269.3	16.82	81.2	63.35	0 B	29.43
13	256	1400	9.14	251.3	15.13	81	62.56	0 B	29.4
13	256	1500	7.32	245.6	13.89	78.2	68.04	0 B	29.38
13	256	1600	6.626	263.6	15.21	77.6	69.76	0 B	29.37
13	256	1700	4.141	271.8	14.8	76.6	72.8	0 B	29.36
13	256	1800	5.434	222.7	10.79	75.2	75.8	0 B	29.34
13	256	1900	5.625	203.9	12.05	73.1	78.2	0 B	29.33
13	256	2000	7.41	189.7	9.93	72.2	79.8	0 B	29.33
13	256	2100	8.64	185.8 (2)	9.12	71.6	82	0 B	29.32
13	256	2200	9.32	186.4 (2)	8.89	71.1	83.2	0 B	29.3
13	256	2300	7.96	185.5 (2)	9.83	71.5	82	0 B	29.3
14	257	0	6.468	186 (2)	12.73	69.97	89.7	0 B	29.29
14	257	100	12.5	255.7	18.77	72.1	81.9	0 B	29.3
14	257	200	7.7	241.3	18.82	69.33	96.2	0 B	29.3
14	257	300	4.882	268.2	17.72	67.01	100.3	0 B	29.29
14	257	400	4.991	261.8	14.28	66.68	100.3	0 B	29.29
14	257	500	5.358	242	14.02	66.15	100.3	0 B	29.29
14	257	600	2.749	194.7	20.83	66.01	100.3	0 B	29.3
14	257	700	2.075	207	17.25	65.32	100.3	0 B	29.31

Day	DATE JD	TIME 24H	WS MPH	WD Deg	SIGMA Deg	AT DegF	RH %	RN inch	BP inHg
14	257	800	2.185	212.9	19.46	65.67	100.3	0 [B]	29.33
14	257	900	1.457	238.2	10.24	66.19	100.3	0 [B]	29.34
14	257	1000	3.659	253.7	22.07	67.85	100.3	0 [B]	29.35
14	257	1100	4.617	257.5	18.74	69.28	100.4	0 [B]	29.36
14	257	1200	5.753	314.8	15.06	67.93	100.3	0 [B]	29.37
14	257	1300	7.27	346	14.79	67.85	100.3	0 [B]	29.37
14	257	1400	8.16	346.3	12.74	67.65	100.3	0 [B]	29.38
14	257	1500	6.995	343.5	16.5	67.98	100.3	0 [B]	29.38
14	257	1600	5.946	334	13.86	67.95	100.3	0 [B]	29.39
14	257	1700	4.906	318.9	16.66	67.66	100.3	0 [B]	29.39
14	257	1800	3.365	303.8	14.15	67.06	100.3	0 [B]	29.4
14	257	1900	3.498	354.5	7.07	62.7	100.3	0 [B]	29.39
14	257	2000	4.929	27.25	6.277	59.82	100.3	0 [B]	29.39
14	257	2100	3.481	45.76	10.06	58.29	100.3	0 [B]	29.4
14	257	2200	2.017	12.24	13.85	56.36	100.3	0 [B]	29.4
14	257	2300	3.146	104.8 [(2)]	16.29	54.48	100.3	0 [B]	29.4
15	258	0	2.17	103.8 [(2)]	11.9	53.52	100.3	0 [B]	29.4
15	258	100	2.522	103.3 [(2)]	10.87	52.29	100.3	0 [B]	29.4
15	258	200	3.23	113.9	11.27	52.86	100.3	0 [B]	29.4
15	258	300	1.542	149.8	9.34	54.74	100.3	0 [B]	29.4
15	258	400	1.552	142.9	16.31	57.55	100.3	0 [B]	29.41
15	258	500	3.483	110.7	9.97	57.8	100.3	0 [B]	29.41
15	258	600	3.123	105.4	11.21	57.8	100.3	0 [B]	29.42
15	258	700	4.14	97.9	12.45	57.8	100.3	0 [B]	29.44
15	258	800	4.387	128.2	24.19	57.6	100.3	0 [B]	29.45
15	258	900	3.68	168.1	21.37	61.12 [(4)]	100.3	0 [B]	29.47
15	258	1000	3.392	207.7	34.57	66.2 [(4)]	100	0 [B]	29.49
15	258	1100	3.928	101.5	41.4	71.6 [(4)]	86.6	0 [B]	29.49
15	258	1200	4.101	105.7	60.08	74.2	78.1	0 [B]	29.49
15	258	1300	5.876	91.1	30.53	75.8	71.6	0 [B]	29.46
15	258	1400	4.53	103.7	55.7	76.7	68.31	0 [B]	29.45
15	258	1500	5.592	73.1	15.58	74.2	73.1	0 [B]	29.42
15	258	1600	6.324	89.4	13.06	73.8	74.6	0 [B]	29.42
15	258	1700	4.482	110.4	10.14	71.7	85.4	0 [B]	29.4
15	258	1800	5.019	103	6.867	69.74	92.8	0 [B]	29.39
15	258	1900	4.372 [(1)]	122.8	13.35	67.2	98.9	0 [B]	29.38
15	258	2000	4.444 [(1)]	122.9	7.91	66.2	100.3	0 [B]	29.38
15	258	2100	4.522 [(1)]	140.2	10.59	66.52	100.3	0 [B]	29.37
15	258	2200	7.31	169.4	10.12	67.02	100.3	0 [B]	29.37
15	258	2300	8.84	173.6	10.08	66.81	100.3	0 [B]	29.37
16	259	0	11.07	177.7	9.56	67.02	100.3	0 [B]	29.37
16	259	100	12.21	184.5	8.93	67.13	100.3	0 [B]	29.37
16	259	200	9.16	180.5	9.17	67.07	100.3	0 [B]	29.36
16	259	300	8.87	177.3	7.84	66.91	100.3	0 [B]	29.36
16	259	400	7.67	170.7	9.47	66.84	100.3	0 [B]	29.35
16	259	500	10.67	177.9	9.12	66.9	100.3	0 [B]	29.34
16	259	600	11.87	183	8.77	67.12	100.3	0 [B]	29.35
16	259	700	12.55	182.6	8.8	68.16	100.3	0 [B]	29.36
16	259	800	13.12	186.8	9.76	69.85	100.4	0 [B]	29.38
16	259	900	12.82	188.9	10.16	71.3	100.3	0 [B]	29.39
16	259	1000	10.89	184.5 [(2)]	9.64	74.5	99.6	0 [B]	29.4
16	259	1100	9.75	184.6 [(2)]	11.54	79.5	85.9	0 [B]	29.41
16	259	1200	8.92	185.5 [(2)]	14.08	82.8	73.2	0 [B]	29.39
16	259	1300	9.83	241.2	16.17	84.8	55.56	0 [B]	29.37
16	259	1400	8.93	253	15.07	84.7	54.18	0 [B]	29.36
16	259	1500	7.68	275.4	15.27	82.4	61.39	0 [B]	29.34
16	259	1600	5.523	260.3	14.82	83.2	63.03	0 [B]	29.32
16	259	1700	3.656	245.8	18.13	82.4	66.6	0 [B]	29.31

Day	DATE JD	TIME 24H	WS MPH	WD Deg	SIGMA Deg	AT DegF	RH %	RN inch	BP inHg
16	259	1800	1.525	152.4	15.11	77.9	85.5	0 B	29.3
16	259	1900	4.369	151.7	10.59	73	93.9	0 B	29.28
16	259	2000	4.602	168.6	10.68	70.5	97.2	0 B	29.27
16	259	2100	6.745	174.9	7.62	69.85	99.9	0 B	29.27
16	259	2200	8.32	181.2	7.02	68.91	100.3	0 B	29.26
16	259	2300	11.04	182.5 (2)	11.4	69.49	100.4	0 B	29.25
17	260	0	11.76	182.2 (2)	9	69.61	100.3	0 B	29.24
17	260	100	11.65	181.8 (2)	8.37	69.23	100.3	0 B	29.24
17	260	200	10.88	173.1	9.32	69.13	100.3	0 B	29.22
17	260	300	11.35	177.2	8.08	68.85	100.4	0 B	29.2
17	260	400	11.9	183.9	8.55	69.55	99.9	0 B	29.19
17	260	500	12.24	186	9.45	69.52	100.3	0 B	29.18
17	260	600	12.11	180.8	9.01	69.63	100.3	0 B	29.18
17	260	700	10.57	179.9	9.2	69.28	100.3	0 B	29.18
17	260	800	10.01	176.1	8.54	70.5	99.5	0 B	29.18
17	260	900	8.95	178	9.97	71.7	96.7	0 B	29.19
17	260	1000	8.3	191.7	10.96	72.9	94.2	0 B	29.19
17	260	1100	6.421	191.3	10.16	72.2	99.3	0 B	29.18
17	260	1200	5.614	257.7	18.6	68.94	100.3	0 B	29.17
17	260	1300	5.935	192.3	11.24	68.13	100.3	0 B	29.15
17	260	1400	6.925	193.6	12.64	69.49	100.3	0 B	29.14
17	260	1500	6.381	181.8	10.55	69.31	100.3	0 B	29.13
17	260	1600	5.867	176.8	11.77	68.67	100.3	0 B	29.11
17	260	1700	4.776	197.4	12	68.71	100.3	0 B	29.11
17	260	1800	4.282	288.5	18.71	68.52	100.3	0 B	29.11
17	260	1900	4.971	307.7	13.31	67.16	100.3	0 B	29.11
17	260	2000	2.018	316.7	26.43	64.76	100.3	0 B	29.12
17	260	2100	4.762	294.9	15.48	65.17	100.3	0 B	29.12
17	260	2200	7.17	333.5	12.06	64.82	100.3	0 B	29.13
17	260	2300	6.062	353.5	11.6	63.19	100.3	0 B	29.13
18	261	0	7.03	348.3	13.65	61.37	100.3	0 B	29.14
18	261	100	11.56	352.3	12.14	57.96	100.3	0 B	29.17
18	261	200	9.3	338.7	11.18	56.09	100.3	0 B	29.18
18	261	300	8.07	334.4	10.69	54.95	100.3	0 B	29.19
18	261	400	6.173	332.9	10.26	52.93	100.3	0 B	29.19
18	261	500	5.704	331.2	10.38	51.38	100.3	0 B	29.21
18	261	600	5.704	339.7	9.9	51.33	100.3	0 B	29.24
18	261	700	4.781	340.9	9.48	50.92 (4)	100.3	0 B	29.27
18	261	800	6.891	331	13.75	55.96 (4)	97.1	0 B	29.32
18	261	900	10.18	334.8	15.82	58.47	83.2	0 B	29.34
18	261	1000	9.35	323.5	16.05	59.35	79	0 B	29.35
18	261	1100	9.26	315	18.1	61.67	75.2	0 B	29.35
18	261	1200	10.1	301.7	19.08	62.65	71.2	0 B	29.34
18	261	1300	11.28	310.7	18.78	64.83	65.06	0 B	29.34
18	261	1400	11.89	303.8	19.15	65.6	62.25	0 B	29.34
18	261	1500	11.72	309.1	16.02	64.64	63.9	0 B	29.32
18	261	1600	9.19	329.2	17.67	64.56	66.82	0 B	29.33
18	261	1700	5.926	328	15.42	64.46	69.53	0 B	29.32
18	261	1800	1.598	314.4	12.1	63.67 (4)	74.9	0 B	29.31
18	261	1900	1.79	98.1	11.49	54.09 (4)	99.4	0 B	29.28
18	261	2000	2.544	165.8	13.93	54.76	100.3	0 B	29.28
18	261	2100	4.343	192.3	11.03	56.42	100.3	0 B	29.28
18	261	2200	5.094	194.1	11.81	56.03	100.3	0 B	29.28
18	261	2300	4.448	188.6	12.46	53.36	100.3	0 B	29.28
19	262	0	3.695	245.8	14.5	53.04	100.3	0 B	29.28
19	262	100	3.42	257.3	16.53	53.14	100.3	0 B	29.28
19	262	200	5.392	166.3	11.79	52.31	100.3	0 B	29.28
19	262	300	4.931	194.2	14.05	53.4	100.4	0 B	29.29

Day	DATE JD	TIME 24H	WS MPH	WD Deg	SIGMA Deg	AT DegF	RH %	RN inch	BP inHg
19	262	400	4.831	217.7	13.73	53.08	100.4	0 B	29.3
19	262	500	5.211	262.1	15.32	54.24	100.4	0 B	29.32
19	262	600	6.125	278	17.58	54.6	100.3	0 B	29.34
19	262	700	6.573	280.4	18.51	55.28	100.3	0 B	29.37
19	262	800	7.99	261.8	39.96	57.8	98.5	0 B	29.4
19	262	900	11.71	135.9	7.87	60.32	77.5	0 B	29.44
19	262	1000	13.02	137.6	8.95	61.83	67.69	0 B	29.46
19	262	1100	14.21	145.6	7.79	62.65	67.29	0 B	29.47
19	262	1200	13.83	141.5	7.93	62.76	63.48	0 B	29.47
19	262	1300	13.41	141	7.24	63.85	57.11	0 B	29.47
19	262	1400	12.95	143.4	8.04	64.25	58.03	0 B	29.47
19	262	1500	11.04	143.3	5.923	65.29	57.04	0 B	29.47
19	262	1600	8.48	138.8	4.514	66.56	54.15	0 B	29.46
19	262	1700	8.98	136.9	4.865	66.11	54.55	0 B	29.47
19	262	1800	5.605	138.5 (2)	2.147	64.52 (4)	59.17	0 B	29.46
19	262	1900	3.278	138.5 (2)	0	56.53 (4)	83.1	0 B	29.43
19	262	2000	3.284	138.2 (2)	0	52	99.6	0 B	29.41
19	262	2100	5.186	136.5	0.659	53.27	99.7	0 B	29.42
19	262	2200	4.572	133.8	0.205	53.71	94.5	0 B	29.43
19	262	2300	5.879	131.7	2.163	53.63	93.4	0 B	29.44
20	263	0	3.404	132	0	51.37	99.1	0 B	29.45
20	263	100	5.241	129.5	3.845	52.06	100.3	0 B	29.45
20	263	200	6.377	125.5	5.738	53.96	100.3	0 B	29.46
20	263	300	6.11	129.6	9.5	52.54	100.3	0 B	29.46
20	263	400	6.611	130.4	5.464	51.99	100.3	0 B	29.46
20	263	500	8.43	115.1	11.16	52.89	100.3	0 B	29.48
20	263	600	8.81	111.5	10.05	52.77	100.4	0 B	29.49
20	263	700	9.25	108.1	11.56	53.24	100.3	0 B	29.52
20	263	800	10.14	100.5	14.52	55.86	100.3	0 B	29.54
20	263	900	11.05	93	14.62	59.54	99	0 B	29.56
20	263	1000	9.35	108.3	9.54	64.43	86.2	0 B	29.58
20	263	1100	6.506	126.9	5.779	69.33	73	0 B	29.58
20	263	1200	5.323	132 (2)	3.604	73.7	54.45	0 B	29.57
20	263	1300	4.891	132.9 (2)	4.735	75.5	50.89	0 B	29.55
20	263	1400	5.223	133.5 (2)	2.576	77	45.36	0 B	29.53
20	263	1500	4.968	129.3	2.565	77.6	42.32	0 B	29.51
20	263	1600	4.054	136.1	0.915	78.2	40.85	0 B	29.5
20	263	1700	3.649	140.5	0.554	77.5	40.84	0 B	29.5
20	263	1800	2.484	142.3	0	73.5 (4)	58.74	0 B	29.5
20	263	1900	3.778	145.3	0.604	58.44 (4)	98.2	0 B	29.46
20	263	2000	3.813	151.3	0	54.38	100.3	0 B	29.45
20	263	2100	4.012	148.5	0.786	54.49	100	0 B	29.45
20	263	2200	4.991	139.6	0	56.89	100.3	0 B	29.46
20	263	2300	6.217	133.9	2.442	55.94	100.3	0 B	29.46
21	264	0	8.02	119.3	6.456	56.06	100.3	0 B	29.47
21	264	100	8.34	114.7	7.42	56.31	100.3	0 B	29.47
21	264	200	5.537	132.3	1.769	55	100.3	0 B	29.46
21	264	300	5.264	135.5	1.462	54.25	100.3	0 B	29.46
21	264	400	6.842 (1)	125.6	6.88	54.43	100.3	0 B	29.46
21	264	500	6.748 (1)	128.8	6.025	53.57	100.3	0 B	29.47
21	264	600	6.796 (1)	130.3	6.028	53.31	100.3	0 B	29.48
21	264	700	9.76	104.1	11.59	54.68	100.3	0 B	29.51
21	264	800	10.87	93.5	15.09	57	100.3	0 B	29.53
21	264	900	10.65	94.2	17.13	60.71 (4)	97.2	0 B	29.55
21	264	1000	7.39	121.9	7.86	66.43 (4)	81.8	0 B	29.57
21	264	1100	4.831	132.4	0.825	72.4 (4)	69.97	0 B	29.58
21	264	1200	5.237	134.4	4.998	77.1 (4)	58.8	0 B	29.57
21	264	1300	7.03	122.2	8.49	78.2	55.12	0 B	29.56

Day	DATE JD	TIME 24H	WS MPH	WD Deg	SIGMA Deg	AT DegF	RH %	RN inch	BP inHg
21	264	1400	6.244	127.8	6.116	79.1	53	*0* [B]	29.54
21	264	1500	5.224	130.1	6.135	79.7	52.22	*0* [B]	29.52
21	264	1600	4.652	140.9	7.26	79.9	51.86	*0* [B]	29.51
21	264	1700	5.378	154	8.73	78.5	52.64	*0* [B]	29.5
21	264	1800	4.799	161.1	1.352	74.5 [(4)]	63.56	*0* [B]	29.49
21	264	1900	5.974	163.6	7.27	62.95 [(4)]	92.1	*0* [B]	29.47
21	264	2000	5.497	170.6	0.588	60.34	94.5	*0* [B]	29.45
21	264	2100	3.972	168	2.23	56.63	100.3	*0* [B]	29.45
21	264	2200	3.586	161.5	0	57.58	100.3	*0* [B]	29.45
21	264	2300	3.529	161.4	0	55.7	100.3	*0* [B]	29.44
22	265	0	4.572	156.2	0.75	57.16	100.3	*0* [B]	29.45
22	265	100	4	154.1	0.081	56.19	100.3	*0* [B]	29.44
22	265	200	4.344	155	0.852	54.15	100.3	*0* [B]	29.44
22	265	300	4.897	150.2	1.303	54.63	100.3	*0* [B]	29.44
22	265	400	5	155	0.805	52.18	100.3	*0* [B]	29.43
22	265	500	4.212	154.6	0.032	53.52	100.4	*0* [B]	29.44
22	265	600	5.185	157.7	1.169	52.82	100.3	*0* [B]	29.44
22	265	700	5.702	166.1	4.931	53.21	100.3	*0* [B]	29.45
22	265	800	5.496	163.6	4.509	58.09	100.3	*0* [B]	29.48
22	265	900	5.073	155.2	3.617	61.28	100	*0* [B]	29.5
22	265	1000	5.578	134	3.737	65.24	90.9	*0* [B]	29.52
22	265	1100	6.779	128.6	11.32	68.83	80	*0* [B]	29.52
22	265	1200	10.94	144.7	41.08	72.2	67.46	*0* [B]	29.52
22	265	1300	11.36	220.3	39.72	71.3	62.85	*0* [B]	29.5
22	265	1400	11.53	222.1	45.33	70.7	59.83	*0* [B]	29.5
22	265	1500	10.38	178.3	39.88	69.49	59.68	*0* [B]	29.49
22	265	1600	7.19	142.7	10.68	68.08	62	*0* [B]	29.48
22	265	1700	7.86	180.7	10.96	67.7	67.69	*0* [B]	29.48
22	265	1800	7.12	176.9	10.23	64.59	73.9	*0* [B]	29.46
22	265	1900	4.837	153.7	0	61.89	85.4	*0* [B]	29.44
22	265	2000	4.034	154	0	60.13	94.9	*0* [B]	29.43
22	265	2100	3.854	156.3	1.276	57.89	99.7	*0* [B]	29.42
22	265	2200	5.929	171.2	5.779	60.27	87.8	*0* [B]	29.41
22	265	2300	5.579	170.4	7.93	59.89	89.1	*0* [B]	29.41
23	266	0	4.164	160 [(3)]	1.814	57.43	99.6	*0* [B]	29.4
23	266	100	1.97	159.1 [(3)]	0	55.19	100.3	*0* [B]	29.39
23	266	200	3.977	159.1 [(3)]	0	54.6	100.3	*0* [B]	29.37
23	266	300	4.996	158.6 [(3)]	0.131	54.75	100.3	*0* [B]	29.34
23	266	400	5.428	156.5 [(3)]	0.463	54.47	100.3	*0* [B]	29.33
23	266	500	8.01	161.3 [(3)]	3.267	53.86	100.3	*0* [B]	29.31
23	266	600	8.01	159.9 [(3)]	2.276	52.88	100.3	*0* [B]	29.31
23	266	700	7.34	159.3 [(3)]	2.521	52.7	100.3	*0* [B]	29.31
23	266	800	8.2	162.4 [(3)]	3.847	53.86	100.3	*0* [B]	29.31
23	266	900	9.58	165.9 [(3)]	4.921	55.86	100.3	*0* [B]	29.31
23	266	1000	9.03	160.4 [(3)]	3.507	56.51	100.3	*0* [B]	29.31
23	266	1100	7.75	155 [(3)]	2.559	57.38	100.3	*0* [B]	29.31
23	266	1200	8.61	159.7 [(3)]	3.618	58.91	100.3	*0* [B]	29.31
23	266	1300	9.37	161.4 [(3)]	4.488	60.39	100.3	*0* [B]	29.31
23	266	1400	8.97	163.1 [(3)]	4.89	61.95	100.4	*0* [B]	29.3
23	266	1500	8.44	159.6 [(3)]	3.861	62.2	100.3	*1.81* [B]	29.29
23	266	1600	8.55	157.2 [(3)]	3.927	62.19	100.3	0	29.29
23	266	1700	7.84	159.1 [(3)]	2.787	62.08	100.3	0	29.29
23	266	1800	5.341	155.7 [(3)]	1.044	61.57	100.3	0	29.3
23	266	1900	4.178	155 [(3)]	0	60.63	100.4	0	29.31
23	266	2000	3.645	155 [(3)]	0	59.99	100.4	0	29.32
23	266	2100	5.416	155.7 [(3)]	0.816	60.05	100.3	0	29.32
23	266	2200	6.47	158.8 [(3)]	1.525	60.06	100.4	0	29.31
23	266	2300	5.301	157.2 [(3)]	0.34	59.83	100.4	0	29.31

Day	DATE JD	TIME 24H	WS MPH	WD Deg	SIGMA Deg	AT DegF	RH %	RN inch	BP inHg
24	267	0	2.987	156 (3)	0	59.62	100.3	0	29.32
24	267	100	3.561	156 (3)	0	59.41	100.3	0	29.32
24	267	200	2.45	156 (3)	0	59.23	100.3	0	29.33
24	267	300	2.667	156 (3)	0	58.95	100.3	0	29.32
24	267	400	2.242	156 (3)	0	58.79	100.3	0	29.33
24	267	500	1.847	155.9 (3)	0	56.72	100.3	0	29.33
24	267	600	2.066	155.9 (3)	0	57.64	100.3	0	29.35
24	267	700	3.571	155.9 (3)	0	58.85	100.3	0	29.36
24	267	800	3.642	155.5 (3)	0	61.33	100.3	0	29.38
24	267	900	1.767	155.5 (3)	0	62.7	100.4	0	29.4
24	267	1000	2.514	155.4 (3)	0	62.85	100.3	0	29.4
24	267	1100	1.684	155.4 (3)	0	64.3	100.3	0	29.4
24	267	1200	2.993	144.3 (3)	3.763	66.25	99.3	0	29.41
24	267	1300	4.9	144 (3)	4.227	65.53	100	0	29.4
24	267	1400	2.38	154.8 (3)	4.446	68.06	90.9	0	29.39
24	267	1500	5.748	133.8 (3)	8.06	65.79	98.6	0	29.39
24	267	1600	4.487	136.9 (3)	4.343	65.21	100.2	0	29.38
24	267	1700	3.375	145.5 (3)	1.287	64.99	100.1	0	29.38
24	267	1800	1.977	148.9 (3)	1.089	64.22	100.3	0	29.37
24	267	1900	1.339	151 (3)	0	62.39	100.3	0	29.37
24	267	2000	3.639	151 (3)	0	61.7	100.3	0	29.37
24	267	2100	1.278	151 (3)	0	61.18	100.3	0	29.37
24	267	2200	2.508	151 (3)	0	60.74	100.4	0	29.36
24	267	2300	3.122	151 (3)	0	58.9	100.3	0	29.35
25	268	0	3.656	150.1 (3)	0.316	60.05	100.3	0	29.35
25	268	100	3.546	149.8 (3)	0	60.41	100.3	0	29.34
25	268	200	4.089	152 (3)	0.829	59.55	100.3	0	29.32
25	268	300	4.657	155 (3)	0.579	59.38	100.3	0	29.32
25	268	400	5.116	162.9 (3)	1.181	59.84	100.3	0	29.3
25	268	500	3.373	164.8 (3)	0	59.46	100.3	0	29.3
25	268	600	4.314	152 (3)	2.456	59.36	100.3	0	29.3
25	268	700	5.506	154.1 (3)	0.819	59.33	100.3	0	29.3
25	268	800	4.542	149.2 (3)	1.298	61.54	100.3	0	29.3
25	268	900	9.08	114.5 (3)	17.15	65.04	100.4	0	29.32
25	268	1000	10.56	97.7 (3)	15.84	65.52	100.3	0	29.32
25	268	1100	7.85	125.2 (3)	12.92	67.3	100.4	0	29.31
25	268	1200	8.34	119.4 (3)	16.72	69.54	98.9	0	29.31
25	268	1300	7.83	126.5 (3)	14.52	70.2	98.9	0	29.29
25	268	1400	8.48	116.2 (3)	10.7	69.32	100.4	0	29.27
25	268	1500	7.08	128.5 (3)	9.48	69.76	100.3	0	29.25
25	268	1600	5.39	140.8 (3)	2.81	70.1	100.3	0	29.23
25	268	1700	4.842	140.8 (3)	5.97	69.07	100.3	0	29.22
25	268	1800	6.79	170.8 (3)	7.41	67.2	100.3	0	29.21
25	268	1900	6.588	171.3 (3)	3.535	64.5	100.3	0	29.19
25	268	2000	4.812	157.6 (3)	2.599	64.04	100.3	0	29.19
25	268	2100	6.988	167 (3)	6.628	65.23	100.3	0	29.19
25	268	2200	3.72	155.7 (3)	4.264	63.84	100.3	0	29.18
25	268	2300	4.596	151.4 (3)	0	63.75	100.3	0	29.18
26	269	0	7.43	167.5 (3)	10.39	63.79	100.4	0	29.17
26	269	100	4.687	159.1 (3)	5.041	63.51	100.4	0	29.17
26	269	200	6.518	148.2 (3)	6.45	64.54	100.3	0	29.16
26	269	300	5.297	150.9 (3)	2.553	64.9	100.3	0	29.16
26	269	400	4.847	159.8 (3)	1.373	64.21	100.3	0	29.15
26	269	500	5.788	167.8 (3)	3.308	63.39	100.3	0	29.14
26	269	600	8.67	191 (3)	7.87	65.1	100.3	0	29.14
26	269	700	10.34	207.6 (3)	19.79	66.06	100.3	0	29.15
26	269	800	7.94	169.6 (3)	12.81	66.44	100.3	0	29.17
26	269	900	7.9	157 (3)	37.1	65.21	100.3	0.09	29.19

Day	DATE JD	TIME 24H	WS MPH	WD Deg	SIGMA Deg	AT DegF	RH %	RN inch	BP inHg
26	269	1000	9.99	200.5 (3)	22.72	64.9 (4)	100.3	0.01	29.17
26	269	1100	10.46	199.2 (3)	57.99	70.2 (4)	99.5	0	29.18
26	269	1200	10.12	174.6 (3)	57.75	72.5	97.6	0	29.19
26	269	1300	10.41	152.8 (3)	38.02	72.7	95.1	0	29.17
26	269	1400	12.59	241.4 (3)	74.5	73.9	89.4	0	29.15
26	269	1500	10.65	183.4 (3)	70.1	73.9	89.5	0	29.14
26	269	1600	10.75	193.5 (3)	59.13	74.8	88.2	0	29.14
26	269	1700	11.73	226.7 (3)	34.88	71.6	95.1	0	29.14
26	269	1800	12.83	240.9 (3)	34.06	68.95	99.5	0	29.14
26	269	1900	7.77	168 (3)	25.28	67.95	100.3	0	29.15
26	269	2000	5.807	166.4 (3)	10.28	66.31	100.3	0	29.16
26	269	2100	5.612	164.1 (3)	7.94	65.56	100.3	0	29.15
26	269	2200	5.325	161.9 (3)	3.351	65.13	100.3	0.02	29.14
26	269	2300	10.03	198.2 (3)	21.01	64.74	100.3	0.14	29.13
27	270	0	13.26	234.5 (3)	24.74	64.38	100.3	0	29.11
27	270	100	12.38	227.4 (3)	27.65	63.66	100.3	0	29.11
27	270	200	8.86	177.5 (3)	16.82	62.51	100.3	0.18	29.1
27	270	300	10.52	197.9 (3)	10.4	62.42	100.3	0.01	29.07
27	270	400	11.01	213.1 (3)	31.53	63.35	100.4	0.09	29.07
27	270	500	6.713	172.1 (3)	15.07	63.15	100.3	0	29.07
27	270	600	6.517	156.1 (3)	12.86	63.38	100.4	0	29.06
27	270	700	9.22	184.4 (3)	29.6	63.31	100.4	0	29.06
27	270	800	10.26	206.7 (3)	26.59	65.07	100.3	0	29.07
27	270	900	9.57	187.1 (3)	33.86	68.18	100.3	0	29.08
27	270	1000	9.32	110.3 (3)	23.43	67.1	100.3	0.18	29.08
27	270	1100	9.04	113.3 (3)	22.83	68.53	99.8	0	29.05
27	270	1200	14.01	60.94 (3)	26.54	73.5	87.1	0	29.06
27	270	1300	12.28	81.8 (3)	20.4	73.8	79.3	0	29.04
27	270	1400	14.46	60.88 (3)	30.69	71.6	83.9	0.02	29.02
27	270	1500	12.24	66.07 (3)	36.16	71	89.5	0	29.01
27	270	1600	10.35	95.8 (3)	19.06	68.49	96.8	0	29.01
27	270	1700	10.27	103.2 (3)	13.33	70	85.4	0	29
27	270	1800	9.2	109.6 (3)	10.16	67.82	77.3	0	29.02
27	270	1900	9.03	112.9 (3)	10.08	64.99	75.5	0	29.03
27	270	2000	8.34	119.8 (3)	8.03	63.59	77.1	0	29.05
27	270	2100	8.42	120.8 (3)	8.18	60.59	87	0	29.06
27	270	2200	6.5	126.9 (3)	4.178	58.12	97.1	0	29.06
27	270	2300	7.26	122.9 (3)	10.71	57.42	100.1	0	29.05
28	271	0	8.12	115.9 (3)	8.94	57.92	99.6	0	29.04
28	271	100	8.26	115.8 (3)	11.4	56.66	100.3	0	29.04
28	271	200	10.44	97.7 (3)	14.22	56.92	99.8	0	29.04
28	271	300	8.69	112.4 (3)	12.09	55.63	99.6	0	29.03
28	271	400	11.28	100.5 (3)	16.55	56.93	93.5	0	29.02
28	271	500	8.93	111 (3)	10.44	56.33	98.3	0	29.03
28	271	600	10.27	96 (3)	12.47	56.06	98.3	0	29.03
28	271	700	11.61	87.3 (3)	17.85	56.53	93.3	0	29.04
28	271	800	12.53	78.9 (3)	23.62	57.99	89	0	29.06
28	271	900	12.56	80.7 (3)	20.19	59.33	85.5	0	29.06
28	271	1000	12.15	87.5 (3)	20.89	59.51	84.3	0	29.06
28	271	1100	10.91	98.5 (3)	14.42	56.2	97	0.03	29.04
28	271	1200	11.77	83.4 (3)	18.13	54.62	100.3	0.07	29.03
28	271	1300	10.6	82.8 (3)	21.81	54.08	100.3	0.06	29
28	271	1400	10.64	79.2 (3)	32.43	54.83	100.3	0	28.98
28	271	1500	13.41	61.39 (3)	26.14	58.32	100.2	0	28.97
28	271	1600	11.57	84.1 (3)	17.64	57.98	100.3	0	28.95
28	271	1700	10.56	97.8 (3)	15.57	59.16	95	0	28.94
28	271	1800	12.4	86.4 (3)	16.66	56.23	93.4	0	28.92
28	271	1900	10.48	106.4 (3)	13.45	54.94	99.5	0	28.92

Day	DATE JD	TIME 24H	WS MPH	WD Deg	SIGMA Deg	AT DegF	RH %	RN inch	BP inHg
28	271	2000	9.14	113 (3)	10.82	52.63	100.3	0	28.93
28	271	2100	10.7	104.5 (3)	14.98	52.48	100.3	0	28.93
28	271	2200	9.64	109.7 (3)	9.63	51.95	100.4	0	28.93
28	271	2300	9.76	108.7 (3)	8.18	51.4	100.4	0	28.92
29	272	0	9.36	110.5 (3)	10.03	51.13	100.3	0	28.92
29	272	100	11.2	96.3 (3)	13.89	51.35	100.3	0	28.92
29	272	200	9.36	112.8 (3)	8.14	50.7	100.3	0	28.91
29	272	300	9.38	112.7 (3)	8.52	51.31	100.3	0	28.9
29	272	400	10.39	106 (3)	13.93	52.64	100.3	0	28.91
29	272	500	10.64	104.1 (3)	14.64	52.86	100.4	0	28.91
29	272	600	11.46	105.5 (3)	13.4	53.1	100.3	0	28.92
29	272	700	10.59	109.1 (3)	11.16	53.29	100.3	0	28.92
29	272	800	11.34	114.1 (3)	11.91	53.96	99.4	0	28.94
29	272	900	16.21	105.1 (3)	12.59	54.94	94.3	0	28.95
29	272	1000	15.55	108.7 (3)	13.48	54.91	92.8	0	28.97
29	272	1100	16.96	110.4 (3)	14.39	56.04	89.3	0	28.98
29	272	1200	15.71	113.2 (3)	13.84	57.78	85.5	0	29
29	272	1300	16.93	111.6 (3)	14.07	56.81	85.9	0	29.01
29	272	1400	15.52	112.6 (3)	13.09	57.07	82.7	0	29.02
29	272	1500	10.12	129.6 (3)	8.46	54.85	94.8	0	29.03
29	272	1600	11.03	125.5 (3)	8.78	54.23	99.4	0	29.05
29	272	1700	11.1	127 (3)	8.09	54.36	100.1	0	29.07
29	272	1800	10.1	128.3 (3)	7.74	53.49	100.3	0	29.09
29	272	1900	12.07	125.2 (3)	9.67	51.59	100.3	0.03	29.12
29	272	2000	11.82	127.5 (3)	8.98	51.27	98.9	0	29.13
29	272	2100	10.21	130 (3)	7.71	51.17	93.2	0	29.15
29	272	2200	11.19	130.5 (3)	7.72	51.64	91.6	0	29.17
29	272	2300	11.58	131 (3)	8.44	50.99	89.7	0	29.18
30	273	0	11.72	128.7 (3)	8.94	50.58	90.2	0	29.17
30	273	100	11.5	136.5 (3)	7.94	50.37	92.6	0	29.18
30	273	200	9.5	139.4 (3)	5.381	48.98	100.3	0	29.19
30	273	300	9.35	137.4 (3)	4.579	49.18	100.1	0	29.2
30	273	400	10.06	139.3 (3)	5.158	47.85	100.3	0.02	29.21
30	273	500	7.05	138.3 (3)	3.177	47.46	100.3	0	29.22
30	273	600	8.68	130.8 (3)	6.024	47.98	100.3	0	29.24
30	273	700	7.61	135.3 (3)	4.09	48.03	100.3	0	29.25
30	273	800	7.6	137 (3)	4.402	48.62	100.1	0	29.28
30	273	900	9.36	135.5 (3)	6.15	51.18	96.7	0	29.31
30	273	1000	9.87	138.2 (3)	5.578	52.25	93.6	0	29.32
30	273	1100	9.75	140.1 (3)	5.577	53.62	88.7	0	29.32
30	273	1200	8.94	144 (3)	4.856	55.47	85.8	0	29.31
30	273	1300	8.69	140.5 (3)	4.93	57.73	79.8	0	29.32
30	273	1400	9.12	141.5 (3)	4.941	58.4	77.6	0	29.31
30	273	1500	10.27	136.1 (3)	6.712	59.49	71.9	0	29.3
30	273	1600	10.98	141.8 (3)	4.881	58.24	71.2	0	29.29
30	273	1700	6.581	145.2 (3)	1.725	56.95	75.8	0	29.28
30	273	1800	3.52	145.3 (3)	0	54.86	87.3	0	29.28
30	273	1900	2.944	145.5 (3)	0	51.75	98.2	0	29.27
30	273	2000	1.509	145.4 (3)	0	50.11	100.3	0	29.28
30	273	2100	1.753	145.6 (3)	0	51	100.4	0	29.28
30	273	2200	2.519	145.6 (3)	0	51.17	100.4	0	29.28
30	273	2300	1.257	145.6 (3)	0	51.16	100.4	0	29.28
1-Oct	274	0	1.57	145.5 (3)	0	50.56	100.4	0	29.27
1	274	100	3.485	145.6 (3)	0	47.66	100.3	0	29.25
1	274	200	2.801	145.6 (3)	0	47.4	100.3	0	29.23
1	274	300	4.252	145 (3)	0.802	49.87	100.3	0	29.23
1	274	400	5.269	140.7 (3)	1.521	50.49	100.3	0	29.22
1	274	500	5.094	146.5 (3)	2.925	51.17	100.3	0	29.21

Day	DATE JD	TIME 24H	WS MPH	WD Deg	SIGMA Deg	AT DegF	RH %	RN inch	BP inHg
1	274	600	4.607	145.3 (3)	0.254	51.55	100.3	0	29.2
1	274	700	7.64	121.3 (3)	8.75	51.84	100.3	0	29.19
1	274	800	8.68	111.6 (3)	11.25	52.49	100.4	0.01	29.17
1	274	900	8.2	114.9 (3)	12.77	52.42	100.3	0.03	29.15
1	274	1000	7.9	115.7 (3)	9.44	52.75	100.3	0.09	29.15
1	274	1100	6.626	128.8 (3)	6.775	53.18	100.3	0.07	29.13
1	274	1200	5.589	134.9 (3)	4.514	53.76	100.3	0.07	29.12
1	274	1300	5.897	133.7 (3)	6.186	54.55	100.3	0.02	29.09
1	274	1400	5.762	130.6 (3)	8.16	55.22	100.3	0	29.07
1	274	1500	4.881	133.2 (3)	2.21	56.61	100.3	0	29.06
1	274	1600	3.253	138.9 (3)	2.368	56.89	100.3	0	29.06
1	274	1700	3.553	141.6 (3)	0.887	56.68	100.3	0	29.07
1	274	1800	6.365	139.9 (3)	3.53	55.83	100.3	0	29.07
1	274	1900	9.3	142.2 (3)	4.619	54.55	100.3	0.01	29.09
1	274	2000	8.91	148.3 (3)	3.515	53.04	100.3	0	29.11
1	274	2100	6.291	151.5 (3)	0.881	51.42	100.3	0	29.13
1	274	2200	5.324	149.4 (3)	1.216	50.71	100.3	0	29.15
1	274	2300	5.723	149.8 (3)	1.007	49.74	100.3	0	29.16
2	275	0	4.941	148.5 (3)	1.421	49.13	100.3	0	29.16
2	275	100	5.297	140.9 (3)	1.039	49.32	100.3	0	29.16
2	275	200	5.529	139 (3)	1.596	49.03	100.3	0	29.17
2	275	300	7.83	138.2 (3)	3.751	49.32	100.3	0	29.17
2	275	400	9.51	143 (3)	4.417	49.4	100.3	0	29.19
2	275	500	7.07	146.5 (3)	2.157	46.78	100.3	0	29.2
2	275	600	5.198	144.4 (3)	0.845	45.1	100.3	0	29.21
2	275	700	2.771	145.2 (3)	0	44.89	100.4	0	29.24
2	275	800	6.692	138.9 (3)	5.663	49.75	100.2	0	29.3
2	275	900	9.12	133.5 (3)	6.649	52.75	92.9	0	29.32
2	275	1000	10.82	138.2 (3)	7.63	54.26	83.2	0	29.32
2	275	1100	11.7	143.3 (3)	7.02	54.35	81.4	0	29.32
2	275	1200	12.46	143.6 (3)	8.55	55.84	67.5	0	29.32
2	275	1300	13.34	141.6 (3)	8.71	56.14	56.32	0	29.32
2	275	1400	12.5	138.9 (3)	8.06	56.79	50.89	0	29.31
2	275	1500	11.34	142.1 (3)	6.714	57.02	50.9	0	29.31
2	275	1600	12.49	142.9 (3)	6.111	56.27	48.37	0	29.31
2	275	1700	12.29	148.1 (3)	5.288	54.42	46.4	0	29.3
2	275	1800	8.5	145.6 (3)	2.469	50.38 (4)	53.41	0	29.29
2	275	1900	3.418	146.1 (3)	0	44.88 (4)	69.7	0	29.28
2	275	2000	1.717	146.1 (3)	0	38.49 (4)	99.8	0	29.28
2	275	2100	1.408	146.2 (3)	0	43.36	100.3	0	29.29
2	275	2200	4.176	144.6 (3)	0.804	47.35	87.3	0	29.32
2	275	2300	11.66	175.7 (3)	9.21	46.13	81.2	0	29.34
3	276	0	7.67	169.2 (3)	3.785	41.8	86.1	0	29.34
3	276	100	5.334	162.3 (3)	0	38.02	97.5	0	29.33
3	276	200	1.907	162.1 (3)	0	33.78	100.3	0	29.32
3	276	300	2.51	162.1 (3)	0	31.16	100.3	0	29.31
3	276	400	1.859	162.1 (3)	0	29.88	100.3	0	29.31
3	276	500	2.379	162 (3)	0	29.9	100.3	0	29.32
3	276	600	0.818	162.1 (3)	0	29.91	100.3	0	29.33
3	276	700	2.592	162.1 (3)	0	32.6 (4)	100.3	0	29.35
3	276	800	5.802	154.8 (3)	1.783	43.11 (4)	98.1	0	29.41
3	276	900	9.94	153.4 (3)	4.61	48.15 (4)	80.5	0	29.44
3	276	1000	10.78	150.2 (3)	6.807	49.99	70.4	0	29.44
3	276	1100	10.52	151.3 (3)	6.961	51.42	68.57	0	29.44
3	276	1200	10.58	144.6 (3)	7.88	53.52	62.58	0	29.44
3	276	1300	11.05	146.1 (3)	8.31	54.64	58.94	0	29.42
3	276	1400	11.07	140.4 (3)	6.714	55.03	53.56	0	29.41
3	276	1500	10.8	143 (3)	7.64	55.66	51.62	0	29.4

Day	DATE JD	TIME 24H	WS MPH	WD Deg	SIGMA Deg	AT DegF	RH %	RN inch	BP inHg
3	276	1600	11.02	145.2 (3)	6.217	55.12	56.16	0	29.4
3	276	1700	10.91	151.7 (3)	5.61	53.17	60.92	0	29.39
3	276	1800	6.43	151.3 (3)	1.525	48.57 (4)	78.6	0	29.38
3	276	1900	2.844	151.6 (3)	0	42.44 (4)	96.9	0	29.35
3	276	2000	2.702	151.5 (3)	0	39.72 (4)	100.3	0	29.34
3	276	2100	5.607	144.8 (3)	1.245	44.86 (4)	94.2	0	29.35
3	276	2200	8.07	143.6 (3)	2.347	47.87	92.2	0	29.37
3	276	2300	6.949	151.4 (3)	1.318	47.51	95.1	0	29.38
4	277	0	4.81	152.1 (3)	0.238	45.78	100.1	0	29.38
4	277	100	2.121	152.3 (3)	0	44.36	100.4	0	29.38
4	277	200	2.365	152.3 (3)	0	44.72	100.4	0	29.38
4	277	300	2.915	152.3 (3)	0	45.58	100.4	0	29.37
4	277	400	4.028	152.1 (3)	0	46.57	100.4	0	29.37
4	277	500	5.438	148.7 (3)	0.908	46.77	100.4	0	29.38
4	277	600	5.262	150.2 (3)	0.584	46.37	100.3	0	29.37
4	277	700	4.931	150.4 (3)	0.975	45.68	100.4	0	29.38
4	277	800	7.32	147.7 (3)	2.213	47.51	100.2	0	29.39
4	277	900	9.3	148.5 (3)	3.459	48.16	97.3	0	29.41
4	277	1000	9.14	149.5 (3)	3.949	48.78	90.7	0	29.42
4	277	1100	7.74	148.1 (3)	2.168	48.7	90.8	0	29.41
4	277	1200	7.03	149 (3)	3.431	49.9	88.7	0	29.4
4	277	1300	7.74	141.1 (3)	3.379	49.85	89.6	0	29.39
4	277	1400	7.85	141.9 (3)	4.089	50.51	86.6	0	29.36
4	277	1500	8.1	139.8 (3)	3.639	51.07	84	0	29.35
4	277	1600	8.04	142.7 (3)	2.55	50.81	83.4	0	29.34
4	277	1700	6.579	145.8 (3)	1.799	50.54	83.1	0	29.33
4	277	1800	5.677	147.2 (3)	1.353	49.25	88	0	29.32
4	277	1900	6.902	141.3 (3)	2.029	48.93	87.6	0	29.32
4	277	2000	5.746	139.1 (3)	1.822	48.76	89.3	0	29.32
4	277	2100	9.11	134.7 (3)	4.781	48.53	93.6	0	29.32
4	277	2200	9.56	134.2 (3)	4.852	47.74	96.8	0	29.32
4	277	2300	8.46	136.6 (3)	4.189	47.27	95.4	0	29.31
5	278	0	7.83	136.1 (3)	3.972	46.61	98.9	0	29.3
5	278	100	8.24	133.6 (3)	4.545	46.1	100.3	0	29.29
5	278	200	9.96	136.6 (3)	4.865	46.08	97.8	0	29.29
5	278	300	11.3	141.4 (3)	5.087	44.87	99.7	0	29.29
5	278	400	8.44	148.4 (3)	3.901	42.9	100.4	0.03	29.29
5	278	500	8.23	145.3 (3)	2.099	42.65	100.4	0	29.29
5	278	600	7.95	145.4 (3)	2.569	42.36	100.4	0	29.3
5	278	700	8.76	145.8 (3)	2.294	42.2	100.4	0	29.31
5	278	800	9.03	141.8 (3)	4.008	42.97	100.4	0	29.34
5	278	900	9.09	139.2 (3)	4.34	44.12	100.4	0	29.36
5	278	1000	9.26	142.8 (3)	4.717	44.53	99.2	0	29.36
5	278	1100	8.04	145 (3)	3.28	44.18	98.6	0	29.36
5	278	1200	8.26	142.7 (3)	4.545	46.57	88.7	0	29.36
5	278	1300	8.74	139.9 (3)	4.434	46.62	83.8	0	29.35
5	278	1400	9.89	143.8 (3)	5.151	48.22	75.9	0	29.34
5	278	1500	7.5	146.5 (3)	3.449	48.96	71.9	0	29.33
5	278	1600	7.48	143.1 (3)	2.887	49.64	67.53	0	29.32
5	278	1700	6.335	144.3 (3)	2.429	49.73	68.88	0	29.32
5	278	1800	2.72	139.8 (3)	1.463	44.87 (4)	87.4	0	29.31
5	278	1900	2.506	137.8 (3)	0.115	36.78 (4)	100.3	0	29.28
5	278	2000	2.065	138.9 (3)	0	34.98 (4)	100.3	0	29.29
5	278	2100	4.205	137.6 (3)	0.418	40.29 (4)	100.3	0	29.3
5	278	2200	4.537	134.4 (3)	0	40.29	100.3	0	29.3
5	278	2300	6.292	131 (3)	1.635	40.22	100.3	0	29.31
6	279	0	6.253	128.2 (3)	4.061	41.55	100.1	0	29.31
6	279	100	5.948	130.7 (3)	0.896	42.47	100.2	0	29.33

Day	DATE JD	TIME 24H	WS MPH	WD Deg	SIGMA Deg	AT DegF	RH %	RN inch	BP inHg
6	279	200	6.739	128.8 (3)	3.223	43.43	100.3	0	29.33
6	279	300	5.272	132.5 (3)	0.876	44.01	100.3	0	29.33
6	279	400	5.452	132.3 (3)	0.255	44.81	100.4	0	29.34
6	279	500	6.062	128 (3)	5.141	45.29	100.4	0	29.35
6	279	600	6.262	128.1 (3)	3.489	45.53	100.4	0	29.37
6	279	700	5.992	129.1 (3)	3.435	46.03	100.4	0	29.38
6	279	800	6.377	126.7 (3)	4.821	47.81	100.2	0	29.41
6	279	900	9.1	108.7 (3)	10.96	49.46	98.9	0	29.44
6	279	1000	7.99	118.2 (3)	7.43	52.22	93.6	0	29.46
6	279	1100	6.455	125.8 (3)	9.54	56.33	82.9	0	29.48
6	279	1200	5.623	132.1 (3)	4.178	59.85	66.85	0	29.49
6	279	1300	6.671	129.4 (3)	5.326	61.31	61.22	0	29.47
6	279	1400	5.73	134.3 (3)	3.665	62.71	54.8	0	29.47
6	279	1500	4.827	138.7 (3)	1.068	63.88	50.41	0.02	29.46
6	279	1600	3.638	143.9 (3)	2.056	64.39	51.3	0	29.46
6	279	1700	2.69	144.9 (3)	0	64.33 (4)	53.01	0	29.46
6	279	1800	4.616	146.4 (3)	0	55.34 (4)	82.2	0	29.45
6	279	1900	5.301	158.2 (3)	0.826	46.22 (4)	100.3	0	29.42
6	279	2000	2.947	164.6 (3)	0.158	43.58	100.3	0	29.44
6	279	2100	1.969	158 (3)	1.496	42.96	100.4	0	29.45
6	279	2200	3.647	152.8 (3)	0	42.04	100.4	0	29.46
6	279	2300	4.967	149 (3)	0.75	46.07	100.4	0	29.47
7	280	0	4.203	148.2 (3)	0	45.57	100.4	0	29.48
7	280	100	6.689	138.1 (3)	2.751	45.89	100.4	0	29.48
7	280	200	6.586	134.1 (3)	2.583	45.26	100.4	0	29.48
7	280	300	6.926	131.9 (3)	3.246	44.93	100.4	0	29.48
7	280	400	8.28	116.2 (3)	6.667	45.63	100.4	0	29.5
7	280	500	8.01	120.4 (3)	7.98	45.22	100.4	0	29.51
7	280	600	8.3	116.8 (3)	8.06	45.34	100.4	0	29.52
7	280	700	8.39	115.1 (3)	9.74	45.77	100.4	0	29.54
7	280	800	11.19	89.2 (3)	17.35	48.4	100.4	0	29.57
7	280	900	10.71	94.3 (3)	15.54	52.48	100.3	0	29.6
7	280	1000	10.35	94 (3)	16.45	56.98 (4)	91	0	29.62
7	280	1100	9.42	102.9 (3)	13.28	62.4 (4)	74.2	0	29.62
7	280	1200	9.46	102.2 (3)	15.52	66.68	62.18	0	29.61
7	280	1300	11.75	81.1 (3)	17.14	68.88	57.16	0	29.58
7	280	1400	11.31	83.7 (3)	18.15	70.8	51.4	0	29.57
7	280	1500	10.65	90.7 (3)	14.49	72.1	48.78	0	29.55
7	280	1600	10.52	92.4 (3)	16.14	72.7	46.3	0	29.54
7	280	1700	9	109.1 (3)	13.05	71.1 (4)	49.07	0	29.52
7	280	1800	5.352	134.8 (3)	3.901	64.58 (4)	62.7	0	29.51
7	280	1900	7.38	140.3 (3)	10.41	61.31	65.71	0	29.49
7	280	2000	8.2	119.4 (3)	11.28	59.57	72.7	0	29.48
7	280	2100	11.66	80.5 (3)	16.71	58.12	86.2	0	29.47
7	280	2200	10.86	88.4 (3)	13.92	57.15	91.1	0	29.47
7	280	2300	10.36	93.8 (3)	13.05	56.11	93.3	0	29.48
8	281	0	11.57	80.6 (3)	23.74	55.95	93.7	0	29.5
8	281	100	10.59	89.5 (3)	15.19	54.95	98	0	29.49
8	281	200	10.13	96.2 (3)	12.64	55.07	99.7	0	29.48
8	281	300	11.11	88.2 (3)	12.51	54.95	99.6	0	29.47
8	281	400	11.51	85.2 (3)	11.42	54.28	100.3	0	29.47
8	281	500	10.51	90.7 (3)	13.44	53.85	100.3	0	29.47
8	281	600	9.73	97.7 (3)	11.68	53.41	100.3	0	29.47
8	281	700	9.23	102 (3)	15.84	53.58	100.3	0	29.48
8	281	800	12.08	73.6 (3)	22.4	55.65	99.9	0	29.5
8	281	900	13.76	59.23 (3)	25.26	58.72	95.4	0	29.51
8	281	1000	14.88	44.96 (3)	25.67	62.16	85.2	0	29.51
8	281	1100	14.78	42.26 (3)	24.7	65.06	79	0	29.51

Day	DATE JD	TIME 24H	WS MPH	WD Deg	SIGMA Deg	AT DegF	RH %	RN inch	BP inHg
8	281	1200	14.43	50.23 (3)	26.36	69.06	72.7	0	29.5
8	281	1300	14.65	56.22 (3)	20.52	72.2	68.41	0	29.46
8	281	1400	14.65	58.21 (3)	22.31	73.7	63.74	0	29.43
8	281	1500	12.2	77.7 (3)	19.45	73.6	56.41	0	29.41
8	281	1600	9.61	100.8 (3)	18.05	73.4	46.94	0	29.39
8	281	1700	7.41	127.7 (3)	13.63	72.4	47.53	0	29.38
8	281	1800	8.17	128.3 (3)	24.4	68.25	54.42	0	29.36
8	281	1900	10.77	86.4 (3)	26.38	64.75	64.29	0	29.35
8	281	2000	13.54	56.13 (3)	23.67	61.67	77.5	0	29.33
8	281	2100	14.13	58.35 (3)	20.13	59.93	81.5	0	29.32
8	281	2200	13.06	69.21 (3)	19.43	59.09	82.4	0	29.31
8	281	2300	12.39	71.2 (3)	20.34	58.41	89.8	0	29.29
9	282	0	15.36	39.04 (3)	24.09	58.54	93.7	0	29.27
9	282	100	13.52	72.1 (3)	21.29	58.19	98.2	0	29.26
9	282	200	13.87	67.98 (3)	20.56	57.53	100.3	0	29.23
9	282	300	13.61	72.2 (3)	21.07	56.93	100.3	0	29.21
9	282	400	14.24	59.05 (3)	21.81	56.87	100.3	0	29.2
9	282	500	10.52	90.6 (3)	16.73	56.8	100.3	0	29.19
9	282	600	14.28	64.96 (3)	23.38	57.32	100.3	0	29.17
9	282	700	17.37	39.95 (3)	21.86	57.72	100.3	0	29.16
9	282	800	17.12	25.67 (3)	22.25	58.99	100.3	0	29.17
9	282	900	17.18	37.67 (3)	22.21	61.79	99.7	0	29.19
9	282	1000	14.93	59.58 (3)	23.18	63.15	97.6	0	29.17
9	282	1100	11.91	91 (3)	19.94	65.05 (4)	90.8	0	29.16
9	282	1200	11.42	135.9 (3)	9.28	58.32 (4)	99.2	0.01	29.18
9	282	1300	6.05	140.2 (3)	2.564	54.83	100.3	0.02	29.18
9	282	1400	7.54	130.1 (3)	6.481	55.84	100	0	29.19
9	282	1500	7.42	132.1 (3)	4.677	55.4	99.4	0	29.2
9	282	1600	7.2	130 (3)	6.797	55.63	97.1	0	29.2
9	282	1700	5.982	133.8 (3)	1.807	57.59	92.1	0	29.21
9	282	1800	8.18	132.2 (3)	5.23	56.79	83.4	0	29.23
9	282	1900	8.16	129.1 (3)	5.049	54.75	72.4	0	29.23
9	282	2000	7.44	127.9 (3)	3.113	53.53	71.4	0	29.24
9	282	2100	6.787	125.6 (3)	4.63	52.39	76.4	0	29.24
9	282	2200	9.91	118.9 (3)	8.71	53.22	79.8	0	29.27
9	282	2300	9.65	123.6 (3)	6.645	51.81	85.2	0	29.28
10	283	0	8.6	130.8 (3)	5.842	50.69	90.2	0	29.29
10	283	100	7.17	134.2 (3)	3.892	48.69	97.2	0	29.3
10	283	200	6.873	137.2 (3)	3.675	47.97	100.2	0	29.31
10	283	300	9.3	134.7 (3)	6.178	47.14	96.9	0	29.31
10	283	400	9.11	133.1 (3)	5.409	46.13	95.3	0	29.32
10	283	500	8.2	134.6 (3)	4.757	45.63	94.9	0	29.35
10	283	600	8.29	133.8 (3)	4.843	44.36	97.2	0	29.36
10	283	700	9.43	129.8 (3)	6.329	43.82	97.8	0	29.38
10	283	800	9.93	131.4 (3)	6.972	44.92	94.8	0	29.42
10	283	900	11.27	133.4 (3)	7.45	45.38	92.9	0	29.45
10	283	1000	10.83	133.6 (3)	7.78	48.02	83.4	0	29.48
10	283	1100	10.88	149.1 (3)	9.25	45.81	92.5	0	29.49
10	283	1200	13.45	140.2 (3)	8.95	49.44	70.9	0	29.5
10	283	1300	13.27	137.5 (3)	9.97	50.69	60.41	0	29.51
10	283	1400	13.18	133.6 (3)	8.33	51.99	52.89	0	29.52
10	283	1500	12.85	142.3 (3)	9.4	52.22	55.06	0	29.53
10	283	1600	11.07	147.7 (3)	6.37	52.16	60.35	0	29.53
10	283	1700	9.25	150.3 (3)	4.288	50.81	65.44	0	29.54
10	283	1800	6.512	144.2 (3)	1.41	46.52	76.9	0	29.53
10	283	1900	6.24	142.8 (3)	0.5	44.85	80.8	0	29.53
10	283	2000	4.15	144 (3)	0.269	42.35 (4)	89.7	0	29.53
10	283	2100	2.088	144.8 (3)	0	36.17 (4)	99.9	0	29.52

Day	DATE JD	TIME 24H	WS MPH	WD Deg	SIGMA Deg	AT DegF	RH %	RN inch	BP inHg
10	283	2200	2.482	144.8 (3)	0	34.66	100.3	0	29.53
10	283	2300	2.387	144.8 (3)	0	36.92 (4)	100.3	0	29.54
11	284	0	5.96	143.6 (3)	0.585	42.61 (4)	98.4	0	29.57
11	284	100	5.832	144.1 (3)	0.469	40.98	100.3	0	29.58
11	284	200	5.394	144.8 (3)	1.78	40.33	100.3	0	29.59
11	284	300	5.49	158.2 (3)	1.196	38.79	100.3	0	29.62
11	284	400	6.254	162.4 (3)	1.466	37.68	96.4	0	29.64
11	284	500	4.889	160.6 (3)	0	35.65	100	0	29.66
11	284	600	3.626	160.6 (3)	0	32.89	100.3	0	29.66
11	284	700	2.86	160.6 (3)	0	29.56 (4)	100.3	0	29.67
11	284	800	3.891	160.5 (3)	0	38.3 (4)	92.5	0	29.75
11	284	900	6.264	165.3 (3)	2.867	43.66 (4)	72.6	0	29.79
11	*284*	*1000*	*5.639*	*165.3* (3)	*2.698*	*47.48*	*68.06*	*0*	*29.81*
11	*284*	*1100*	*7.03*	*159.4* (3)	*5.028*	*48.7*	*66.39*	*0*	*29.82*
11	*284*	*1200*	*3.883*	*226.7* (3)	*50.3*	*51.05*	*61.93*	*0*	*29.81*
11	*284*	*1300*	*5.745*	*302.8* (3)	*59.42*	*52.04*	*63.54*	*0*	*29.79*
11	284	1400	6.35	299.6	44.63	53.57	58.29	0	29.77
11	284	1500	5.724	311.9	30.46	54.92	54.86	0	29.77
11	284	1600	5.462	308.2	24.4	54.51	52.82	0	29.76
11	284	1700	3.239	325.4	25.83	54.48 (4)	52.27	0	29.75
11	284	1800	2.931	68.45	28.98	48.07 (4)	71.6	0	29.74
11	284	1900	5.957	57.01	10.49	39.95 (4)	94.9	0	29.71
11	284	2000	5.876	37.32	5.06	39.48	95.2	0	29.72
11	284	2100	4.986	48.82	4.456	37.58	99.8	0	29.72
11	284	2200	1.252	64.04	0.39	34.09	100.3	0	29.71
11	284	2300	1.7	64.48	0.148	31.88	100.3	0	29.7
12	285	0	3.511	118.7	11.24	31.13	100.3	0	29.7
12	285	100	3.349	169.7	5.447	34.23	100.3	0	29.7
12	285	200	4.683	164.7	6.492	35.67	100.3	0	29.71
12	285	300	4.747	163.7	6.494	35.17	100.3	0	29.72
12	285	400	5.236	156.7	6.188	35.24	100.3	0	29.72
12	285	500	5.761	162.3	7.75	35.51	100.3	0	29.73
12	285	600	5.634	170.4	6.004	35.55	100.3	0	29.74
12	285	700	5.863	163.8	7.94	36.05	100.3	0	29.75
12	285	800	7.24	166.1	9.69	39.7	100.3	0	29.78
12	285	900	8.58	174.8	10.99	44.21	99.4	0	29.81
12	285	1000	9.88	183.6	11.17	49.21 (4)	82.6	0	29.82
12	285	1100	11.07	178.4	9.92	54.34 (4)	62.76	0.03	29.81
12	285	1200	11.43	180.8	11.01	58.22	43.65	0	29.8
12	285	1300	10.03	192.9 (2)	15.28	61.09	38.61	0.01	29.78
12	285	1400	8.72	193 (2)	10.56	62.7	35.16	0	29.77
12	285	1500	6.642	192 (2)	16.98	64.14	34.51	0.02	29.76
12	285	1600	5.942	172.4	18.21	64.51	35.32	0	29.75
12	285	1700	7.48	110.4	10.32	62.57 (4)	39.23	0	29.73
12	285	1800	6.873	112.2	4.472	54.46 (4)	53.63	0	29.71
12	285	1900	7.26	130.4	15.67	51.85	58.27	0	29.69
12	285	2000	5.035	160.5	16.25	49.96	62.37	0	29.69
12	285	2100	5.994	164	5.838	49.18	72.3	0	29.69
12	285	2200	5.583	165.9	5.538	47.45	79.5	0	29.68
12	285	2300	6.951	170.9	5.203	45.79	99.8	0	29.67
13	286	0	7.7	173.8	5.192	45.23	100.4	0	29.67
13	286	100	6.223	172.1	6.054	44.39	100.4	0	29.67
13	286	200	6.695	165.5	7.95	43.53	100.4	0	29.66
13	286	300	7.21	161.4	8.42	43.2	100.3	0	29.64
13	286	400	6.454	162.3	7.93	42.58	100.3	0	29.64
13	286	500	7.05	160.1	8.01	42.04	100.3	0	29.65
13	286	600	9.17	175.1	6.778	42.16	100.3	0	29.65
13	286	700	8.64	174.8	6.943	42.75	100.3	0	29.66

Day	DATE JD	TIME 24H	WS MPH	WD Deg	SIGMA Deg	AT DegF	RH %	RN inch	BP inHg
13	286	800	9.91	173.6	8.05	45.54	100.4	0	29.69
13	286	900	12	178.9	8.19	48.76	98.2	0	29.71
13	286	1000	10.82	175.2	9.53	52.62	86.6	0	29.71
13	286	1100	10.23	177.1	10.94	56.55	76.1	0	29.7
13	286	1200	10.68	180.4	10.24	59.42	68.66	0	29.7
13	286	1300	8.98	183.5	11.26	61.23	62.82	0	29.67
13	286	1400	9.78	182.1	11.12	62.98	56.41	0	29.67
13	286	1500	7.36	176.7	11.35	62.59	53.51	0	29.64
13	286	1600	4.788	185.7	6.757	62.72	57.77	0	29.62
13	286	1700	5.053	128.2	8.08	59.8 (4)	63.22	0	29.61
13	286	1800	6.822	104.8	4.923	54.11 (4)	76.7	0	29.58
13	286	1900	6.101	136.3	5.686	53.74	71.3	0	29.57
13	286	2000	4.843	152	7.65	53.18	62.62	0	29.57
13	286	2100	5.518	155.6	6.807	49.97	72.2	0	29.56
13	286	2200	5.205	191.1	8.95	49.1	90.2	0	29.56
13	286	2300	4.723	198	9.07	49.79	74.9	0	29.57
14	287	0	4.689	172.6	6.102	47.91	89.4	0	29.56
14	287	100	4.952	177	5.329	48.24	93.4	0	29.55
14	287	200	6.82	184.4	7.65	49.03	96.5	0	29.55
14	287	300	4.621	175.7	5.361	49.11	99.3	0	29.55
14	287	400	3.805	173.7	2.667	47.9	100.3	0	29.54
14	287	500	4.782	175.2	4.251	48.06	100.3	0	29.55
14	287	600	3.452	175.5	1.346	47.15	100.3	0	29.55
14	287	700	4.097	151.9	5.096	46.63	100.3	0	29.56
14	287	800	3.21	157.9	6.276	48.26	100.3	0	29.58
14	287	900	2.899	176.7	0.979	50.31	100.3	0	29.6
14	287	1000	1.561	182.2	6.581	52.35	96.3	0	29.62
14	287	1100	3.676	350	28.42	54.78	90.1	0	29.63
14	287	1200	5.817	356.5	12.18	56.58	82.9	0	29.63
14	287	1300	7.07	10.98	12.9	59.16	70.5	0	29.63
14	287	1400	6.521	30.29	20.45	62.28	58.71	0	29.61
14	287	1500	7.22	21.12	22.45	64.78	51.3	0	29.6
14	287	1600	6.922	27.14	15.89	64.95	49.25	0	29.59
14	287	1700	9.27	0.66	11.84	60.88 (4)	70.7	0	29.58
14	287	1800	7.41	350.9	7.53	54.12 (4)	90.8	0	29.56
14	287	1900	5.74	357.4	4.7	49.05 (4)	100.3	0	29.55
14	287	2000	2.491	7.65	0.076	44.38	100.3	0	29.55
14	287	2100	1.525	7.63	0.148	40.9	100.3	0	29.55
14	287	2200	2.976	348.6	9.65	40.08	100.3	0	29.55
14	287	2300	3.492	346.5	1.888	38.96	100.3	0	29.55
15	288	0	3.029	341 (2)	0	38.56	100.3	0	29.55
15	288	100	3.234	341.7 (2)	0.021	37.77	100.3	0	29.55
15	288	200	1.056	341.9 (2)	0	35.09	100.3	0	29.56
15	288	300	1.751	341.8 (2)	0	33.73	100.3	0	29.56
15	288	400	2.111	341.9 (2)	0	33.47	100.3	0	29.57
15	288	500	3.222	338.5	39.75	33.32	100.3	0	29.58
15	288	600	3.411	169.7	0.631	36.53	100.3	0	29.59
15	288	700	3.377	180.4	5.675	39.54	100.3	0	29.61
15	288	800	3.7	192.3	10.51	41.74	100.3	0	29.64
15	288	900	4.655	188.6	15.9	45.73 (4)	100.3	0	29.68
15	288	1000	3.027	190.4	19.37	52.18 (4)	90.9	0	29.72
15	288	1100	3.503	240.8	28.84	56.92	74.6	0	29.73
15	288	1200	3.396	251	13.24	60.25	60.86	0	29.72
15	288	1300	5.225	277.1	23.05	62.05	62.02	0	29.69
15	288	1400	8.11	324.2	19.1	61.94	63.08	0	29.69
15	288	1500	7.35	352	19.55	63.03	59.74	0	29.67
15	288	1600	9.04	350.8	12.55	61.83	60.9	0	29.67
15	288	1700	9.72	351.7	10.33	57.87 (4)	68.06	0	29.67

Day	DATE JD	TIME 24H	WS MPH	WD Deg	SIGMA Deg	AT DegF	RH %	RN inch	BP inHg
15	288	1800	9.15	350.6	8.34	50.64 (4)	82.2	0	29.66
15	288	1900	5.376	359.2	6.149	44.62 (4)	95.6	0	29.65
15	288	2000	2.221	2.19	0.1	38.3 (4)	99.9	0	29.64
15	288	2100	3.946	3.168	2.753	39.5	100.3	0	29.63
15	288	2200	5.048	8.81	2.983	39.24	100.3	0	29.64
15	288	2300	2.136	0.584	2.192	35.77	100.3	0	29.64
16	289	0	3.756	2.832 (2)	12.8	34.42	100.3	0	29.63
16	289	100	2.528	3.321 (2)	0.166	32.29	100.3	0	29.63
16	289	200	1.465	3.274 (2)	0.124	30.33	100.3	0	29.62
16	289	300	2.214	3.358 (2)	0.158	30.85	100.3	0	29.62
16	289	400	0.847	3.219 (2)	0.072	28.96	100.3	0	29.62
16	289	500	0.959	3.219 (2)	0.038	28.49	100.3	0	29.63
16	289	600	1.022	3.422 (2)	0.03	28.16	100.2	0	29.63
16	289	700	1.78	3.541 (2)	0.057	28.09 (4)	100.2	0	29.64
16	289	800	1.863	32.99	7.54	37.59 (4)	100.3	0	29.71
16	289	900	3.095	69.21	36.91	46.68 (4)	91.4	0	29.76
16	289	1000	3.656	220.5	22.62	50.82	75.6	0.02	29.77
16	289	1100	4.59	243.2	22.18	53.84	63.76	0.01	29.76
16	289	1200	6.281	338	34.31	57.58	48.57	0	29.76
16	289	1300	6.977	340.5	30.56	59.75	40.67	0.01	29.73
16	289	1400	7.84	338.4	26.74	60.49	40.51	0.02	29.71
16	289	1500	9.92	317.4	14.71	61.02	43.18	0	29.71
16	289	1600	9.56	353.4	12.6	60.3	40.45	0	29.69
16	289	1700	8.37	0.136	9.07	56.18 (4)	50.78	0	29.67
16	289	1800	6.433	12.62	5.171	48.32 (4)	69.06	0	29.65
16	289	1900	5.163	21.14	4.713	43.26 (4)	83.8	0	29.63
16	289	2000	3.082	33.42	1.194	37.07 (4)	100.1	0	29.61
16	289	2100	1.569	32.09	0.192	34.76	100.3	0	29.6
16	289	2200	2.531	40.07	2.917	33.08	100.3	0	29.59
16	289	2300	2.537	54.71	0.194	32.93	100.3	0	29.58
17	290	0	2.991	54.72	0.232	32.31	100.3	0	29.58
17	290	100	3.905	65.89	2.044	33.86	100.3	0	29.57
17	290	200	4.983	176.2	32.47	36.16	100.3	0	29.57
17	290	300	5.008	181.6	3.516	36.09	100.3	0	29.57
17	290	400	4.701 (1)	178	3.768	35.9	100.3	0	29.57
17	290	500	4.8 (1)	179.8	5.501	35.7	100.3	0	29.57
17	290	600	4.714 (1)	174.3	3.591	35.24	100.3	0	29.57
17	290	700	5.197	177.5	3.535	35.81	100.3	0	29.58
17	290	800	5.641	179.4	5.455	38.6 (4)	100.3	0	29.6
17	290	900	8.78	184.4	8.92	44.39 (4)	100.4	0	29.64
17	290	1000	6.135	184.1	12.98	49.47 (4)	94.7	0	29.66
17	290	1100	4.133	224.3	18.96	55.69 (4)	75.6	0	29.65
17	290	1200	4.46	255.4	19.2	60.79 (4)	62.25	0.01	29.64
17	290	1300	5.407	306.7	18.96	62.68	52.14	0	29.61
17	290	1400	5.812	297.2	42.45	64.09	44.96	0.01	29.6
17	290	1500	4.776	302.9	15.25	63.75	43.43	0	29.57
17	290	1600	4.438	150.3	29.73	66.42	37.99	0	29.56
17	290	1700	5.114	80.2	5.416	63.28 (4)	44.37	0	29.54
17	290	1800	4.741	78.7	4.528	52.09 (4)	70.7	0	29.49
17	290	1900	3.935	79.2	2.898	45.03 (4)	90	0	29.46
17	290	2000	2.274	69.64	0.145	44.51	90.5	0	29.47
17	290	2100	2.834	80.3	12.87	45.39	93.6	0	29.46
17	290	2200	3.738	173.6	19.75	47.99	96.1	0	29.46
17	290	2300	5.592	188.2	8.78	49.11	100.3	0	29.45
18	291	0	4.603	172.5	10.67	49.74	99.6	0	29.44
18	291	100	5.268	170.1	9.67	49.46	93	0	29.42
18	291	200	6.165	165.7	11.54	49.9	86.4	0	29.41
18	291	300	4.832	139.8	0.289	49.32	86.2	0	29.4

Day	DATE JD	TIME 24H	WS MPH	WD Deg	SIGMA Deg	AT DegF	RH %	RN inch	BP inHg
18	291	400	4.631	157	9.62	49.07	87.3	0	29.39
18	291	500	7.21	175.1	7.69	49.96	76.8	0	29.38
18	291	600	11.68	186	7.91	50.92	80.8	0	29.38
18	291	700	12.36	187.9	8.56	51.46	81.1	0	29.38
18	291	800	11.09	181.7	9.41	52.52	83.2	0	29.4
18	291	900	9.91	186.7	9.07	53.88	78.8	0	29.41
18	291	1000	8.89	182.3 (2)	7.95	55.83	70.8	0	29.41
18	291	1100	7.82	182.8 (2)	10.07	60.04	56.95	0	29.4
18	291	1200	7.46	183.8 (2)	9.71	64.17	46.62	0.02	29.41
18	291	1300	5.891	192.9	9.68	64.46	52.5	0	29.37
18	291	1400	5.407	162.6	16.1	67.63	44.62	0	29.36
18	291	1500	6.801	87.7	11.52	67.24	43.65	0.01	29.33
18	291	1600	6.562	83.8	8.89	65.96	44.62	0	29.32
18	291	1700	5.561	51.4	8.7	62.59	56.07	0	29.31
18	291	1800	6.569	73.4	10.44	60.7	65.5	0	29.3
18	291	1900	3.538	91.1	14.64	58.35	77.1	0	29.29
18	291	2000	3.284	162.3	37.57	57.26	78.8	0	29.28
18	291	2100	3.411	146	6.757	57.1	79.2	0	29.28
18	291	2200	4.604	130.7	2.405	56.51	82.1	0	29.28
18	291	2300	4.927	132.4	2.744	54.75	85.4	0	29.26
19	292	0	4.392	158.1	6.355	52.2	86.7	0	29.24
19	292	100	4.856	165.2	4.619	51.4	87.1	0	29.22
19	292	200	6.876	171.8	6.815	52.39	86.5	0	29.21
19	292	300	7.27	177.3	6.326	52.58	94.8	0	29.21
19	292	400	8.86	178.4	6.937	54.07	88.4	0	29.21
19	292	500	8.66	177.8	7.58	55.32	83.3	0	29.21
19	292	600	8.18	179.4	7.84	54.91	84.9	0	29.21
19	292	700	10.16	181.1	7.47	55.23	84.9	0	29.2
19	292	800	11.17	177.2	8.07	56.17	80.6	0	29.21
19	292	900	11.76	173.6	10.1	57.27	79.6	0	29.21
19	292	1000	13.71	192	9.74	58.85	79.8	0	29.22
19	292	1100	9.31	205.6	10.11	59.79	89.8	0.04	29.22
19	292	1200	10.43	189.8	8.74	56	100.3	0.26	29.21
19	292	1300	10.73	187.7	7.9	55.85	100.3	0.12	29.2
19	292	1400	10.63	177.7	7.57	56.87	100.3	0.01	29.18
19	292	1500	11.32	183	7.8	57.59	100.3	0	29.19
19	292	1600	11.58	186	8.44	57.77	100.3	0	29.18
19	292	1700	11.06	185.5	8.26	57.84	100.3	0	29.18
19	292	1800	10.11	184.3	7.45	57.65	100.3	0	29.18
19	292	1900	9.51	187.8	8.22	57.55	100.3	0	29.19
19	292	2000	8.94	189.2	8.93	57.72	100.3	0	29.19
19	292	2100	7.21	174.3	7.25	57.56	100.3	0	29.19
19	292	2200	8.61	175.8	7.38	57.81	100.3	0	29.2
19	292	2300	5.83	172.5	8.68	57.56	100.3	0	29.18
20	293	0	7.51	168.5	9.1	57.62	100.3	0	29.18
20	293	100	8.64	181	8.91	57.32	100.3	0	29.18
20	293	200	8.74	177.8	7.71	57.32	100.3	0	29.17
20	293	300	7.12	167.4	8.71	57.04	100.3	0	29.15
20	293	400	7.81	173.5	10.9	57.58	100.3	0	29.15
20	293	500	9.56	186.4	8.49	57.5	100.3	0.03	29.16
20	293	600	12.21	188.3	8.66	57.69	100.3	0	29.16
20	293	700	11.36	186.7	7.76	57.97	100.3	0	29.17
20	293	800	8	185.3	9.55	58	100.3	0	29.17
20	293	900	9.62	188.2	8.72	59.2	100.3	0	29.18
20	293	1000	12.2	184.1	8.61	62.88	100.3	0	29.2
20	293	1100	11.66	184.3	8.58	66.36	95.6	0	29.21
20	293	1200	8.13	193.9	17.4	66.71	90.8	0	29.19
20	293	1300	4.755	264.1	18.45	67.67 (4)	79.3	0	29.18

Day	DATE JD	TIME 24H	WS MPH	WD Deg	SIGMA Deg	AT DegF	RH %	RN inch	BP inHg
20	293	1400	6.324	295.4	19.92	60.64 (4)	95.5	0.01	29.15
20	293	1500	6.209	293.7	15.09	60.97	98.1	0	29.14
20	293	1600	8.74	294.7	16.53	61.63	85	0	29.17
20	293	1700	5.487	293.1	13.03	60.62	87.8	0	29.18
20	293	1800	3.34	293.6	9.15	59.23	89	0	29.19
20	293	1900	5.053	270.5	8.41	57.81	87.6	0	29.2
20	293	2000	1.012	272	8.47	53.62	96.9	0	29.2
20	293	2100	3.315	282.1	13.32	54.72	95	0	29.21
20	293	2200	4.259	313.1	9.72	56.46	91.6	0	29.22
20	293	2300	3.514	289	10.31	55.91	97.9	0	29.22
21	294	0	3.29	185.4	8.65	53.82	100.3	0	29.21
21	294	100	3.385	175.2	4.059	52.99	100.3	0	29.21
21	294	200	4.314	186.7	9.41	52.97	100.3	0	29.22
21	294	300	2.633	173.4	11.54	52.57	100.3	0	29.22
21	294	400	3.189	284.6	8.33	53.33	100.3	0	29.23
21	294	500	4.432	295.7	10.74	53.93	100.3	0	29.24
21	294	600	4.587	307.3	9.59	53.29	100.3	0	29.25
21	294	700	5.553	321.5	9.24	53.27	100.3	0	29.26
21	294	800	4.771	311.6	14.62	53.91	100.3	0	29.28
21	294	900	7.32	315.9	15.6	55.57	100.3	0	29.29
21	294	1000	6.341	298.4	13.88	57.14	96.1	0	29.3
21	294	1100	7.17	304.4	14.52	57.32	93	0	29.29
21	294	1200	7.19	300.4	16.18	57.31	93	0	29.28
21	294	1300	7.02	304.4	16.65	56.83	95.9	0	29.27
21	294	1400	7.75	297.9	14.09	56.47	98.9	0	29.27
21	294	1500	6.499	298.5	14.58	56.23	99.5	0	29.26
21	294	1600	5.84	305.6	12.26	55.87	100.3	0	29.26
21	294	1700	5.153	302.2	12.91	55.68	100.3	0	29.27
21	294	1800	3.375	296.3	7.05	54.83	100.3	0	29.27
21	294	1900	2.405	283	4.231	53.66	100.3	0	29.27
21	294	2000	2.704	299.6	2.428	51.6 (4)	100.3	0	29.26
21	294	2100	0.882	306.1 (2)	0	45.56 (4)	100.3	0	29.25
21	294	2200	0.394	306.2 (2)	0	43.29	100.3	0	29.26
21	294	2300	1.375	306.2 (2)	0	42.67	100.4	0	29.25
22	295	0	2.144	306.2 (2)	0	42.15	100.3	0	29.24
22	295	100	2.134	283.3	7.92	42.07	100.3	0	29.24
22	295	200	2.498	253.8	14.84	41.8	100.3	0	29.24
22	295	300	3.752	189.5	6.39	41.94	100.3	0	29.24
22	295	400	4.349	177.7	10.32	44.7	100.3	0	29.25
22	295	500	4.922	173.4	5.028	45.9	100.4	0	29.26
22	295	600	4.071	208.3	13.37	46.98	100.4	0	29.27
22	295	700	5.507	209.2	10.01	47.09	100.3	0	29.28
22	295	800	4.078	224.6	7.86	47.35	100.3	0	29.3
22	295	900	5.547	193.7	9.94	49.03	100.3	0	29.31
22	295	1000	6.789	189	9.79	50.32	100.3	0	29.31
22	295	1100	6.674	180.7	12.35	52.73	100.2	0	29.32
22	295	1200	4.253	219.4	25.23	57.31	96.3	0	29.33
22	295	1300	4.725	106.9	21.89	60.94	83.6	0	29.3
22	295	1400	7.25	92.8	14.8	60.98	77.7	0	29.28
22	295	1500	4.8	106.5	12.6	59.7	81.5	0	29.26
22	295	1600	4.581	115.8	9.55	59.17	83.8	0	29.24
22	295	1700	4.247	114.3	0	56.99 (4)	89.6	0	29.23
22	295	1800	3.024	114.8	0	51.72 (4)	100.2	0	29.21
22	295	1900	4.107	117.6 (2)	0.223	47.57	100.3	0	29.19
22	295	2000	3.719	118 (2)	0	45.36	100.3	0	29.18
22	295	2100	4.421 (1)	118.7 (2)	0.583	47.26	100.3	0	29.19
22	295	2200	4.447 (1)	125.4	2.505	46.46	100.3	0	29.2
22	295	2300	4.475 (1)	139.4	5.314	43.54	100.4	0	29.18

Day	DATE JD	TIME 24H	WS MPH	WD Deg	SIGMA Deg	AT DegF	RH %	RN inch	BP inHg
23	296	0	4.242	170.3	3.982	44.97	100.4	0	29.17
23	296	100	5.023	148	5.521	44.76	100.4	0	29.16
23	296	200	5.956	136.6	4.773	45	100.4	0	29.15
23	296	300	5.321	153	3.966	45.5	100.4	0	29.14
23	296	400	5.442	149.8 (2)	3.557	44.96	100.4	0	29.13
23	296	500	5.617	149.9 (2)	5.822	44.81	100.4	0	29.12
23	296	600	5.61	150.6 (2)	5.633	45.05	100.4	0	29.11
23	296	700	5.382	158.7	3.087	44.8	100.4	0	29.1
23	296	800	5.747	165.6	6.472	45.88	100.4	0	29.11
23	296	900	6.054	170.7	7.65	49.24	100.3	0	29.11
23	296	1000	10.15	174.2	9.5	52.91	100.3	0	29.11
23	296	1100	11.64	182.4	9.4	56.27	98.3	0	29.11
23	296	1200	11.07	183.2	9.29	59.99	90.3	0	29.1
23	296	1300	9.65	182	10.41	62.55	84.6	0	29.09
23	296	1400	7.41	176.9	13.55	67.11	70.1	0	29.08
23	296	1500	5.19	251.7	22.22	67.34	65.1	0	29.09
23	296	1600	7.46	325.3	11.4	64.19	68.72	0	29.08
23	296	1700	8.24	328	11.7	60.73	85.3	0	29.1
23	296	1800	4.78	338.9	11.03	56.49	96.8	0	29.11
23	296	1900	6.263	283.2	12.85	55.47	94.3	0	29.13
23	296	2000	8.87	267.3	12.9	54.59	64.08	0	29.16
23	296	2100	8.78	237.2	6.664	51.28	71.4	0	29.17
23	296	2200	7.85	218.7	9.11	50.66	72.9	0	29.18
23	296	2300	8.15	205.6	7.98	50.48	75.1	0	29.18
24	297	0	6.685	212	8.57	49.22	83.5	0	29.19
24	297	100	4.759	236.5	10.74	46.34	93.9	0	29.19
24	297	200	5.867	261	8.96	46.24	95.2	0	29.2
24	297	300	5.195	250.3	11.45	44.55	100	0	29.2
24	297	400	5.313	249.7	13.17	44.1	99.3	0	29.2
24	297	500	4.01	215.6	17.16	43.56	98.7	0	29.21
24	297	600	6.386	180.5	8.65	42.68	100.3	0	29.22
24	297	700	5.834	168.1	5.768	41.62	100.3	0	29.23
24	297	800	9.59	176.2	8.18	45.33	100.4	0	29.28
24	297	900	10.57	182.5	9.03	49.09	98.5	0	29.31
24	297	1000	11.26	182	9.48	53.43	86	0	29.32
24	297	1100	13.07	176.7	10.8	56.94	72.9	0	29.31
24	297	1200	10.9	178.1	13.63	59.19	63.41	0	29.28
24	297	1300	12.8	185	12.47	60.6	57.34	0	29.26
24	297	1400	10.93	198	14.07	60.65	55.89	0	29.25
24	297	1500	7.76	248.9	14.94	59.35	56.31	0	29.22
24	297	1600	6.756	270.8	12.12	58.79	59.68	0	29.22
24	297	1700	6.473	249.9	10	57.24	61.51	0	29.21
24	297	1800	5.493	233.8	8.67	54.4	63.19	0	29.19
24	297	1900	4.418	176.4	13.21	52.43	68.84	0	29.17
24	297	2000	4.353	193.5	17.26	50.15	74.7	0	29.17
24	297	2100	5.913	194.4	9.74	49.76	74.5	0	29.17
24	297	2200	4.666	177.1	10.35	50.14	77	0	29.17
24	297	2300	5.385	174.2	7.28	50.12	82.7	0	29.15
25	298	0	3.947	200.8	16.86	48.68	85.8	0	29.14
25	298	100	5.135	208.1	13.72	49.25	77.1	0	29.14
25	298	200	6.587	204.2	10.18	49.72	72.9	0	29.14
25	298	300	9.27	227.9	9.64	50.07	77.6	0	29.15
25	298	400	10.16	271.6	17.49	47.05	88.2	0	29.16
25	298	500	8.16	247.2	10.7	45.48	94	0	29.16
25	298	600	9.56	248.6	11.39	45.08	94.3	0	29.18
25	298	700	7.68	214.6	11.57	43.42	100.4	0	29.19
25	298	800	8.33	248.6	12.41	44.9	98.9	0	29.21
25	298	900	8.99	299.6	16.18	45.97	95	0	29.26

Day	DATE JD	TIME 24H	WS MPH	WD Deg	SIGMA Deg	AT DegF	RH %	RN inch	BP inHg
25	298	1000	7.98	309.6	18.47	45.9	96.3	0	29.26
25	298	1100	6.782	304.9	18.61	46.58	97.4	0	29.27
25	298	1200	10.11	256.9	15.36	49.79	86.4	0	29.28
25	298	1300	13.19	254.7	13.59	52	72.2	0	29.28
25	298	1400	11.77	286	16.94	50.38	80.2	0	29.28
25	298	1500	10.54	288.7	19.14	49.85	78.4	0	29.28
25	298	1600	8.7	297.3	18.66	50.75	76.1	0	29.29
25	298	1700	4.989	319.9	14.3	47.66	81.8	0	29.29
25	298	1800	3.056	352.9	1.024	45.66	90.6	0	29.28
25	298	1900	3.549	359.6	9.03	42.75	99.5	0	29.29
25	298	2000	2.757	329.1	10.26	42.76	100.4	0	29.3
25	298	2100	3.178	322.1	7.51	43.47	100.4	0	29.32
25	298	2200	3.385	315.8	13.52	44.2	100.4	0	29.33
25	298	2300	2.701	309.4	8.09	43.17	100.4	0	29.32
26	299	0	4.239	277.3	13.21	42.35	100.4	0	29.31
26	299	100	3.274	255.8	11.17	41.32	100.3	0	29.31
26	299	200	4.066	211.2	15.58	41.98	100.3	0	29.31
26	299	300	4.453	199.7	21.95	41.63	100.3	0	29.31
26	299	400	3.535	204.3	15.91	41.56	100.3	0	29.31
26	299	500	4.21	225.5	10.4	42.15	98.5	0	29.31
26	299	600	5.328	206.4	9.4	42.95	90	0	29.32
26	299	700	5.597	207.1	9.05	42.97	89.6	0	29.33
26	299	800	6.883 (1)	197.2	10.95	43.46	89.9	0	29.35
26	299	900	6.893 (1)	217.2	11.01	44.53	89.5	0	29.37
26	299	1000	6.939 (1)	228.5	13.56	46.63	85.8	0	29.38
26	299	1100	6.779	232	24.89	51.04	72	0	29.42
26	299	1200	4.767	215.4	32.36	49.36	75.9	0	29.4
26	299	1300	8.29	296.4	26.53	49.9	71.5	0	29.37
26	299	1400	8.04	310.8	18.73	50.57	67.47	0	29.36
26	299	1500	8.57	310.3	17.29	50.32	69.04	0	29.36
26	299	1600	8.67	320.1	13.78	49.53	72.7	0	29.36
26	299	1700	7.59	320	12.8	48.03	76.1	0	29.37
26	299	1800	4.565	351.9	11.97	45.92 (4)	87.2	0	29.38
26	299	1900	2.899	10.03 (2)	3.045	40.62 (4)	99.9	0	29.38
26	299	2000	1.397	10.39 (2)	0.089	35.21 (4)	100.3	0	29.37
26	299	2100	0.606	10.39 (2)	0.075	35.09	100.3	0	29.38
26	299	2200	3.13	231.1	19.51	35.39	100.3	0	29.37
26	299	2300	2.775	214.8	10.19	37.36	100.3	0	29.37
27	300	0	3.585	41.91	13	39.97	100.3	0	29.39
27	300	100	2.479	34.34	0.214	39.82	100.3	0	29.39
27	300	200	3.7	35.07	37.06	41.12	100.3	0	29.38
27	300	300	3.678	206	30.22	42.58	100.3	0	29.38
27	300	400	4.784	224.1	12.76	43.22	99.9	0	29.39
27	300	500	4.164	235.6	18.19	43.43	100.1	0	29.4
27	300	600	4.344	231.8	12.4	43.57	100.4	0	29.42
27	300	700	5.975	269.5	11.31	44.06	100.4	0	29.43
27	300	800	6.393	276.5	15.14	44.51	100.4	0	29.45
27	300	900	6.579	298.6	16.37	45.13	100.4	0	29.47
27	300	1000	7.62	294.2	19.18	47.25	97.4	0	29.49
27	300	1100	10.08	295.8	19.28	49.73	82.2	0	29.5
27	300	1200	9.96	298.8	19.63	50.16	77.1	0	29.5
27	300	1300	9.77	297.8	18.68	50.93	71	0	29.48
27	300	1400	7.31	309.2	15.51	50.05	72.6	0	29.45
27	300	1500	6.201	340.9	11.44	49.55	75.5	0	29.45
27	300	1600	5.892	322.7	13.4	49.81	72.8	0	29.45
27	300	1700	5.218	314.5	14.78	50.52	70.4	0	29.45
27	300	1800	5.077	281.3	12.84	47.98	74	0	29.44
27	300	1900	3.635	276.3	10.98	44.83	84.3	0	29.44

Day	DATE JD	TIME 24H	WS MPH	WD Deg	SIGMA Deg	AT DegF	RH %	RN inch	BP inHg
27	300	2000	3.922	219.2	11.34	40.48	100.1	0	29.42
27	300	2100	4.25	195.5	9.77	39.15	100.3	0	29.42
27	300	2200	4.338	185.1	7.66	42.46	100.3	0	29.43
27	300	2300	5.161	164.6	5.938	40.74	100.3	0	29.43
28	301	0	6.302	176.8	7.43	39.09	100.3	0	29.42
28	301	100	8.2	184.3	6.069	40.47	100.3	0	29.43
28	301	200	9.98	191.4 (2)	7.8	41.68	100.3	0	29.44
28	301	300	10.99	191 (2)	8.34	42.14	100.3	0	29.44
28	301	400	10.88	191.3 (2)	9.06	41.53	100.3	0	29.44
28	301	500	12.02	186.7	8.53	40.49	100.3	0	29.44
28	301	600	11.26	183.4	7.08	39.78	100.3	0	29.44
28	301	700	11.99	179.8	7.59	39.75	100.3	0	29.45
28	301	800	13.9	184.9	8.37	41.34	100.3	0	29.48
28	301	900	16.14	182.1	7.94	44.22	99.4	0	29.51
28	301	1000	14.08	181.5	8.84	48.64	88.1	0	29.52
28	301	1100	13.49	183.3	9.39	53.41	73	0	29.52
28	301	1200	13.37	181.9	9.46	56.75	62.75	0	29.51
28	301	1300	15.21	178.7	9.5	58.51	57.1	0	29.48
28	301	1400	13.37	177.9	11.28	60.59	52.36	0	29.46
28	301	1500	12.36	180.6	10.04	62.26	49.96	0	29.45
28	301	1600	12.4	179.2	8.85	62.15	51.36	0	29.43
28	301	1700	10.63	179.4	7.17	59.26	57.03	0	29.41
28	301	1800	8.07	172.4	7.75	54.39	67.61	0	29.39
28	301	1900	10.59	173.3	7.87	53.93	66.86	0	29.4
28	301	2000	11.11	168.9	9.63	53.39	71.5	0	29.4
28	301	2100	14.27	186.3	8.52	52.47	71.2	0	29.4
28	301	2200	14.17	194.2	9.51	52.29	72.5	0	29.39
28	301	2300	14.79	196.4	9.5	51.52	76.2	0	29.38
29	302	0	15.75	195	9.62	50.92	76.2	0	29.37
29	302	100	13.65	193.2	9.29	50.23	78.3	0	29.38
29	302	200	13.51	189.9	8.45	49.73	77.8	0	29.38
29	302	300	13.94	183.1	7.18	49.16	80.5	0	29.37
29	302	400	14.2	181.5	6.595	48.72	88.3	0	29.36
29	302	500	12.91	183.9	7.5	48.8	87.8	0	29.37
29	302	600	12.37	183.4	6.99	48.63	86.6	0	29.38
29	302	700	10.98	177.2	7.58	48.47	91.4	0	29.38
29	302	800	13.03	178.5	7.94	49.96	88.6	0	29.38
29	302	900	15.22	184.6	7.85	52.65	76	0	29.39
29	302	1000	14.86	187.1	8.76	54.63	69.24	0	29.4
29	302	1100	14.83	182.2 (2)	7.79	57.39	61.91	0	29.4
29	302	1200	13.23	183.1 (2)	8.2	59.62	58.08	0	29.38
29	302	1300	11.77	182.6 (2)	8.28	61.8	54.88	0	29.36
29	302	1400	10.25	198.4	11.43	64.24	48.95	0	29.36
29	302	1500	9.1	202.9	11.53	65.6	45.33	0	29.35
29	302	1600	7.96	194.2	10.66	64.2	47.85	0	29.33
29	302	1700	9.14	183.4	7.66	61.86	52.49	0	29.31
29	302	1800	9.86	178	7.85	58.79	59.66	0	29.31
29	302	1900	10.61	202	9.46	59.97	47.08	0	29.32
29	302	2000	11.08	200.2	9.9	58.83	48.77	0	29.34
29	302	2100	10.71	198.4	9.63	57.62	51.77	0	29.35
29	302	2200	12.6	194.3	8.98	57.17	54.01	0	29.36
29	302	2300	11.35	199.4	9.17	56.36	58.44	0	29.37
30	303	0	9.77	204.9	9.78	56.22	54.28	0	29.37
30	303	100	7.44	183.2	7.74	54.21	56.76	0	29.37
30	303	200	8.65	174.9	6.693	52.22	64.48	0	29.36
30	303	300	7.74	163.6	9.22	51.62	77.1	0	29.36
30	303	400	9.53	179.7	5.723	50.19	80.3	0	29.36
30	303	500	9.69	191.2	6.36	50.24	79.2	0	29.37

Day	DATE JD	TIME 24H	WS MPH	WD Deg	SIGMA Deg	AT DegF	RH %	RN inch	BP inHg
30	303	600	9.64	189.6	7.48	50.2	88.1	0	29.38
30	303	700	8.8	184.5	7.69	50.92	83	0	29.4
30	303	800	6.936	178.2 (2)	9.29	51.26	79.9	0	29.42
30	303	900	7.85	178.4 (2)	7.59	53.25	76.6	0	29.44
30	303	1000	6.539	178.9 (2)	8.45	55.71	69.16	0	29.45
30	303	1100	7.67	189.4	9.95	59.02	64.37	0	29.47
30	303	1200	8.81	192.5	15.25	63.09	57.21	0	29.48
30	303	1300	8.51	189.9	14.48	63.45	61.03	0	29.46
30	303	1400	10.35	178.2	10.4	63.07	60.5	0	29.44
30	303	1500	9.44	189.7	12.09	63.96	59.43	0	29.42
30	303	1600	7.7	205.2	10.89	62.99	62.45	0	29.41
30	303	1700	6.361	181.1	7.81	58.81	75.8	0	29.39
30	303	1800	5.5	201.2	13.4	56.72	77.9	0	29.38
30	303	1900	4.865	245.1	46.13	54.04	84.8	0	29.39
30	303	2000	5.302	278.5	14.3	55.7	79.3	0	29.4
30	303	2100	2.942	300.6	11.03	56.25	78.2	0	29.4
30	303	2200	2.621	192.9	30.74	54.7	85.3	0	29.4
30	303	2300	2.495	164.3	3.793	53.97	90.3	0	29.39
31	304	0	2.681	158.2	0.359	54.19	91.4	0	29.39
31	304	100	2.916	156.8	0.645	52.84	96.9	0	29.38
31	304	200	3.751	142.9	1.018	53.26	94	0	29.37
31	304	300	2.578	153.3	1.508	52.92	95.5	0	29.36
31	304	400	3.483	138.9	37.38	52.06	99.9	0	29.35
31	304	500	4.378	9.18	5.359	51.32	100.3	0	29.35
31	304	600	4.952	49.14	5.213	50.45	100.3	0	29.34
31	304	700	3.939	37.95 (2)	0.234	49.99	99.7	0	29.35
31	304	800	1.694	37.95 (2)	0.166	48.9	100.3	0	29.35
31	304	900	2.133	37.62 (2)	0.46	53.9	90.3	0	29.36
31	304	1000	2.517	38.87	1.62	57.09	79.3	0	29.36
31	304	1100	3.794	166.5	27.3	57.53	81.7	0	29.34
31	304	1200	3.78	246.8	13.28	57.59	83.5	0	29.32
31	304	1300	3.272	252.3	25.17	58.5	82.9	0	29.29
31	304	1400	4.441	114.1	7.42	55.69	96.7	0.11	29.26
31	304	1500	5.175	158.4	14.21	52.52	100.3	0.37	29.24
31	304	1600	5.281	118.5	6.006	52.14	100.3	0.14	29.19
31	304	1700	4.339	63.99	37.36	51.85	100.3	0.1	29.18
31	304	1800	4.376	49.38	10.49	51.2	100.3	0.11	29.17
31	304	1900	3.733	103.6	6.942	51.16	100.3	0.24	29.17
31	304	2000	4.111	98.9	6.445	50.89	100.3	0.28	29.14
31	304	2100	5.336	20.35	18.27	49.2	100.3	0.03	29.1
31	304	2200	5.61	4.249	6.506	47.81	100.3	0.05	29.06
31	304	2300	5.662	0.369	10.14	47.55	100.3	0.12	29.02
1-Nov	305	0	5.565	9.96	8.08	47.37	100.3	0.13	28.99
1	305	100	4.696	7.15	4.587	47.37	100.3	0	28.95
1	305	200	3.326	46.09	16.41	47.74	100.3	0.2	28.91
1	305	300	1.824	93.1	0.108	47.88	100.3	0.3	28.88
1	305	400	1.466	93.1	0.065	48.15	100.3	0.03	28.84
1	305	500	4.086	46.57	23.74	48.27	100.3	0	28.82
1	305	600	3.754	358.8	6.345	48.28	100.3	0.01	28.78
1	305	700	2.819	22.62	9.54	48.41	100.3	0.26	28.74
1	305	800	3.207	196.1	24.78	49.2	100.3	0.54	28.71
1	305	900	2.96	228	5.485	49.6	100.3	0.09	28.69
1	305	1000	4.485	242.5	28.35	50.28	100.3	0.19	28.68
1	305	1100	3.677	107.8	30.15	52.31	100.3	0.07	28.68
1	305	1200	5.197	155.5	32.71	54.25	100.3	0.04	28.65
1	305	1300	3.838	103.6	22.19	56.27	100.3	0	28.64
1	305	1400	5.223	330.4	12.35	55.29	100.3	0	28.62
1	305	1500	7.79	336.6	10.25	54.7	100.3	0	28.61

Day	DATE JD	TIME 24H	WS MPH	WD Deg	SIGMA Deg	AT DegF	RH %	RN inch	BP inHg
1	305	1600	9.15	324.3	12.32	52.41	100.3	0.09	28.61
1	305	1700	9.39	323	11.12	49.99	100.3	0.25	28.63
1	305	1800	9.12	320.2	11.32	49.02	100.3	0.21	28.65
1	305	1900	8.4	302.7	13.86	48.8	100.3	0.12	28.66
1	305	2000	11.63	274.9	13.74	48.09	100.3	0.19	28.68
1	305	2100	9.54	274.4	12.35	47.22	100.3	0.26	28.71
1	305	2200	10.72	283.5	16.61	46.27	100.3	0.2	28.72
1	305	2300	12.42	267.3	12.31	43.98	100.4	0.17	28.72
2	306	0	9.71	250.1	10.87	42.88	100.4	0.19	28.72
2	306	100	10.63	273.6	13.33	43.53	100.4	0.17	28.72
2	306	200	13.5	297	14.54	43.06	100.4	0.06	28.74
2	306	300	17.18	295.9	16.21	42.19	100.4	0	28.77
2	306	400	20.14	299.6	15.32	41.43	100.3	0	28.8
2	306	500	16.28	295.1	15.67	40.72	100.3	0	28.85
2	306	600	16.74	292	16.02	40.12	100.3	0	28.9
2	306	700	18.06	291.3	16.08	39.88	100.3	0.07	28.95
2	306	800	16.9	292.4	16.03	40.65	100.3	0	29
2	306	900	16.48	295.9	15.98	41.88	100	0	29.04
2	306	1000	16.29	303.4	14.53	43.37	99.6	0	29.08
2	306	1100	18.11	298.2 (2)	16.51	45.52	93	0	29.12
2	306	1200	20.55	298.4 (2)	15.88	48.23	80.9	0	29.16
2	306	1300	19.37	297.4 (2)	15.95	50.59	70.4	0	29.18
2	306	1400	18.51	294.1	16.02	51.85	64.02	0	29.2
2	306	1500	16.46	292.4	16.65	51.92	62.19	0	29.22
2	306	1600	16.01	300.7	15.71	52.05	59.01	0	29.25
2	306	1700	11.55	290.5	16.29	50.43	69.29	0	29.28
2	306	1800	10.88	278.1	13.53	47.55	83.4	0	29.3
2	306	1900	8.72	282.1	15.07	46.28	89.6	0	29.33
2	306	2000	8.52	284.3	15.63	45.65	93	0	29.35
2	306	2100	8.56	272.4	11.3	44.88	95.5	0	29.37
2	306	2200	6.878	262.3	7.8	43.03	100.3	0	29.37
2	306	2300	5.76	239.1	8.17	40.28	100.3	0	29.37
3	307	0	5.365	188.4	11.23	40.61	100.3	0	29.37
3	307	100	4.36	192.6	11.78	39.88	100.3	0	29.36
3	307	200	4.56	208.9	8.4	38.94	100.3	0	29.37
3	307	300	4.221	187.8	15.16	37.57	100.3	0	29.38
3	307	400	4.611	175.9	14.42	37.88	100.3	0	29.39
3	307	500	6.351	165.1	7.7	38.04	100.3	0	29.39
3	307	600	7.24	169.7	7.61	38.12	100.3	0	29.39
3	307	700	9.21	174.7	7.55	38.2	100.3	0	29.39
3	307	800	10.95	177.9	8.13	40.49	100.3	0	29.41
3	307	900	10.59	172.5	10.17	43.57	100.4	0	29.43
3	307	1000	13.01	176.5	8.57	47.07 (4)	96.1	0	29.43
3	307	1100	14.86	180.4 (2)	8.05	52.2 (4)	82	0	29.41
3	307	1200	15.18	181 (2)	7.77	57.08	66.35	0	29.38
3	307	1300	12.55	181.4 (2)	8.02	59.04	65.56	0	29.34
3	307	1400	10.42	177.2	9.89	62.69	53.27	0	29.34
3	307	1500	8.64	183.7	8.12	63.1	52.06	0	29.34
3	307	1600	9.5	186.3	10.02	62.79	50.67	0	29.33
3	307	1700	9.16	192.8	7.41	61.13	55.08	0	29.34
3	307	1800	8.25	194.7	8.39	60.29	55.86	0	29.34
3	307	1900	9.72	186.4	8.43	59.09	62.79	0	29.34
3	307	2000	9.72	179.6	6.892	58.64	66.19	0	29.34
3	307	2100	8.85	168.8	10.18	59.35	67.03	0	29.35
3	307	2200	9.89	176.9	8.06	59.26	68.93	0	29.35
3	307	2300	9.6	176.5	8.9	59.86	66.41	0	29.33
4	308	0	10.44	185.2	7.28	58.18	75.4	0	29.33
4	308	100	9.87	185.3	8.6	57.96	74.6	0	29.36

Day	DATE JD	TIME 24H	WS MPH	WD Deg	SIGMA Deg	AT DegF	RH %	RN inch	BP inHg
4	308	200	9.3	182.5	7.05	57.82	77	0	29.37
4	308	300	8.57	170.6	9.38	58.04	69.48	0	29.35
4	308	400	7.87	172.4	9.09	58.02	68.25	0	29.34
4	308	500	10.36	175.5 (2)	8.31	58.36	66.86	0	29.34
4	308	600	9.05	174.7 (2)	8.33	57.73	71.3	0	29.34
4	308	700	9.94	174.7 (2)	11.14	57.73	74.7	0	29.34
4	308	800	11.02	181.2	8.58	58.5	75.2	0	29.36
4	308	900	11.35	175.4	8.57	60.51	70.6	0	29.37
4	308	1000	10.84	178.2	8.49	62.64 (4)	70.4	0	29.37
4	308	1100	10.92	189.5	9.27	68.34 (4)	65.62	0	29.38
4	308	1200	10.03	206.6	12.55	72.8	62.59	0	29.37
4	308	1300	9.65	195.3	12.63	74.7	63.03	0	29.35
4	308	1400	8.86	180.3	8.77	74	65.16	0	29.33
4	308	1500	7.02	185.5	9.32	72.1	71.6	0	29.31
4	308	1600	9.11	178.6	9.19	71.4	70.4	0	29.3
4	308	1700	8.08	171.1	8.5	69.5	74.1	0	29.29
4	308	1800	8.32	177	8.53	69.29	75.2	0	29.28
4	308	1900	13.79	186.1	6.721	68.11	78.9	0	29.29
4	308	2000	12.52	184.1	7.24	67.5	80.1	0	29.28
4	308	2100	14.36	185.3	6.926	65.98	84.7	0	29.27
4	308	2200	13.75 (1)	185	7.49	65.12	85.7	0	29.27
4	308	2300	13.72 (1)	187.9	7.6	64.4	85.4	0	29.26
5	309	0	13.67 (1)	185.6	7.12	64.13	85.8	0	29.25
5	309	100	11.87	186	7.56	64.09	85.6	0	29.25
5	309	200	11.65	184.5	7.49	64.4	84.8	0	29.25
5	309	300	11.92	188.4	7.65	63.95	85.2	0	29.25
5	309	400	9.35	185.5	7.56	63	87.3	0	29.24
5	309	500	7.28	196.7	9.58	63.32	85.1	0	29.25
5	309	600	5.996	179.2	27.36	62.42	87.1	0	29.26
5	309	700	4.418	177.5	17.22	60.89	94.9	0	29.28
5	309	800	4.008	55.9	23.1	58.48	100.3	0.03	29.29
5	309	900	3.846	157.8	18.15	59.85	100.3	0	29.29
5	309	1000	5.457	203.1	16.76	62.61	93.8	0	29.29
5	309	1100	6.207	210.4	11.82	63.93	86.6	0	29.31
5	309	1200	7.64	224.4	12.5	64.81	84	0	29.3
5	309	1300	7.29	243	10.25	65.78	81	0	29.29
5	309	1400	5.125	280.2	17.6	64.4	84.2	0	29.3
5	309	1500	9.55	306.5	14.24	62.59	94.3	0	29.32
5	309	1600	4.203	335.3	11.31	59.85	100.3	0	29.33
5	309	1700	6.086	78.6	15.76	58.79	100.4	0	29.32
5	309	1800	6.352	105.2	5.648	57.91	100.3	0	29.31
5	309	1900	6.805	95.4	4.596	57.91	100.3	0	29.3
5	309	2000	6.324	116.2	6.072	58.28	100.3	0	29.3
5	309	2100	6.394	128.4	12.13	58.52	100.3	0	29.28
5	309	2200	5.816	125.3	8.08	57.95	100.3	0	29.26
5	309	2300	5.172	112.7	3.66	56.61	100.3	0	29.22
6	310	0	4.999	117.5	4.962	55.68	100.3	0	29.19
6	310	100	4.891	125.3	3.32	54.82	100.3	0	29.18
6	310	200	6.969	124.6	9.35	56.88	100.3	0	29.15
6	310	300	5.515	116.5	8.45	56.87	100.3	0	29.14
6	310	400	7.86	112.2	4.131	56.52	100.3	0	29.11
6	310	500	8.97	118.6	7.44	57.96	97.8	0	29.08
6	310	600	8.06	144.9	11.46	58.76	91.8	0	29.05
6	310	700	9.59	170.1	11.32	59.73	92	0	29.04
6	310	800	9.14	166.5	11.02	60.45	97	0	29.02
6	310	900	12.86	177.3	10.95	61.74	98.9	0	28.99
6	310	1000	16.81	176.6	9.37	62.35	99.6	0	28.97
6	310	1100	21.24	180.6	9.05	67.21	85.5	0	28.94

Day	DATE JD	TIME 24H	WS MPH	WD Deg	SIGMA Deg	AT DegF	RH %	RN inch	BP inHg
6	310	1200	18.62	187.6	8.95	66.13	88.9	0	28.91
6	310	1300	17.11	216.1	12.19	66.83	83.1	0	28.89
6	310	1400	20.65	238.1	9.7	66.67	73.6	0	28.91
6	310	1500	20.93	231.1	10.61	65.51	74.8	0	28.92
6	310	1600	*26.94* [A]	243.1	10.7	61.22	82.7	0	28.95
6	310	1700	*25.73* [A]	257.1	11.88	57.67	87.2	0	29.01
6	310	1800	19.92	267.4	12.24	54.27	89.7	0	29.07
6	310	1900	16.13	272	12.94	52.43	94.8	0	29.11
6	310	2000	17.54	270.6	13.98	49.91	98.7	0	29.12
6	310	2100	16.36	283.6	16.95	47.71	99.8	0	29.15
6	310	2200	18.08	286.2	16.88	46.61	91.6	0	29.17
6	310	2300	18.3	285.3	16.73	45.91	86.4	0	29.21
7	311	0	18.66	287.8	16.57	45.01	84.4	0	29.25
7	311	100	15.8	289.9	16.42	44.47	84.9	0	29.28
7	311	200	16.81	304.8	14.74	42.07	95.3	0.02	29.33
7	311	300	15.85	304.6	15.35	40.01	100.3	0.02	29.36
7	311	400	15.16	306	15.01	40.52	100	0	29.4
7	311	500	13.2	296.5	15.46	40.9	98.3	0	29.45
7	311	600	10.55	294	15.28	39.31	95.3	0	29.49
7	311	700	9.95	288.3	15.88	38.45	90.5	0	29.53
7	311	800	9.13	281.7	14.49	39.47	85.5	0	29.57
7	311	900	11.01	292.6	15.59	42.74	81	0	29.61
7	311	1000	10.57	291.1	17.15	45.67	73.2	0	29.63
7	311	1100	12.89	290.4	17.37	47.38	68.69	0	29.65
7	311	1200	12.83	292.3	18.02	49.35	63.86	0	29.66
7	311	1300	12.3	293.1	19.02	51.11	58.67	0	29.65
7	311	1400	11.41	299.7	18.66	52.36	56.88	0	29.64
7	311	1500	9.56	287.9	21.19	53.13	54.44	0	29.63
7	311	1600	8.95	297.2	16.53	53.02	52.96	0	29.64
7	311	1700	5.709	280.9	14.44	48.72	60.7	0	29.61
7	311	1800	2.775	233.7	14.41	44.87	73.1	0	29.58
7	311	1900	4.178	186.9	9.34	43.07	79.9	0	29.56
7	311	2000	4.89	158.3	9.55	45.41	77.5	0	29.54
7	311	2100	4.759	161	10.7	44.31	81.8	0	29.52
7	311	2200	4.622	153.9	9.64	44.45	88.9	0	29.51
7	311	2300	8.73	177.3	8.64	45.73	88.1	0	29.48
8	312	0	11.67	182.7	7.32	46.48	86.3	0	29.46
8	312	100	13.53	184.6	7.19	46.92	87.2	0	29.43
8	312	200	14.54	185.9	7.54	47.45	79.8	0	29.41
8	312	300	13.77	185.9	7.95	47.6	80.4	0	29.38
8	312	400	12.23	184.2	7.28	47.64	77.9	0	29.36
8	312	500	11.64	182.3	6.687	48.23	68.55	0	29.35
8	312	600	14.38	181	7.52	49.54	64.49	0	29.33
8	312	700	13.78	186.4	7.58	49.65	62.23	0	29.32
8	312	800	13.25	188.8	7.61	50.05	63.46	0	29.32
8	312	900	12.45	190.8	8.21	51.9	61.88	0	29.32
8	312	1000	14.09	184.2	8.28	55.07	55.77	0	29.33
8	312	1100	10.34	182.9	9.52	56.87	55.47	0	29.31
8	312	1200	8.55	183.2	15.52	60.43	48.91	0	29.31
8	312	1300	5.898	235.4	20.31	63.31	45.19	0	29.29
8	312	1400	4.317	265.1	23.74	65.96	41.95	0	29.28
8	312	1500	3.895	329	17.86	63.58	46.49	0	29.25
8	312	1600	3.963	0.429	13.96	61.94	50.6	0	29.23
8	312	1700	5.391	302.4	20.85	60.54	52.69	0	29.21
8	312	1800	3.402	334.7	15.96	57.81 [(4)]	58.77	0	29.2
8	312	1900	4.264	95.2	15.79	52.46 [(4)]	72.1	0	29.18
8	312	2000	4.432	145.8	10.49	50.87	77.3	0	29.17
8	312	2100	6.296	187.2	7.44	53.36	76.3	0	29.17

Day	DATE JD	TIME 24H	WS MPH	WD Deg	SIGMA Deg	AT DegF	RH %	RN inch	BP inHg
8	312	2200	6.196	193	7.01	53.87	78.9	0	29.16
8	312	2300	6.504	188.1	6.318	53.55	81.8	0	29.15
9	313	0	6.062	184.2	9	53.81	84.9	0	29.15
9	313	100	7.81	240.4	20.88	58.28	76.1	0	29.15
9	313	200	9.21	283.3	16.09	59.96	76.7	0	29.16
9	313	300	6.023	336.5	11.11	57.77	85	0	29.16
9	313	400	7.77	334.9	10.45	54.79	99.5	0	29.15
9	313	500	6.806	340.4	10.24	53.77	100.3	0	29.15
9	313	600	9.46	322.1	10.44	50.94	100.3	0	29.17
9	313	700	7.71	336.8	11.1	49.55	100.3	0	29.17
9	313	800	6.057	321.2	12.11	49.24	100.3	0.02	29.19
9	313	900	7.05	326.7	10.92	49.22	100.3	0	29.21
9	313	1000	8.12	331.3	11.45	49.33	100.3	0	29.22
9	313	1100	7.86	333.8	10.41	49.74	100.3	0.06	29.24
9	313	1200	6.203	338.6	11.31	49.5	100.3	0.06	29.24
9	313	1300	6.47	336.6	12.41	50.3	100.3	0	29.23
9	313	1400	6.385	331.7	12.96	51.26	100.3	0	29.22
9	313	1500	7.56	356.5	9.95	50.49	100.3	0	29.21
9	313	1600	5.747	333.6	11.44	49.91	100.3	0	29.23
9	313	1700	6.083	350.3	10.08	49.12	100.3	0	29.24
9	313	1800	7.91	357.7	7.96	47.93	100.3	0	29.24
9	313	1900	5.438	1.334	7.25	46.71	100.3	0	29.25
9	313	2000	5.48	354	8.59	45.78	100.3	0	29.27
9	313	2100	5.237	355.9	7.65	44.93	100.3	0	29.27
9	313	2200	7.93	4.699	7.82	44.88	91.7	0	29.29
9	313	2300	7.59	0.557	8.67	44	83.2	0	29.31
10	314	0	5.447	353	14.31	43.34	85.3	0	29.32
10	314	100	3.114	43.58	12.31	42.77	85.5	0	29.31
10	314	200	5.041	14.35	16.34	42.19	88.6	0	29.31
10	314	300	5.616	344.8	8.85	41.89	90.4	0	29.31
10	314	400	6.421	338.3	8.17	41.34	90	0	29.32
10	314	500	4.572	330.2	8.58	39.15	95	0	29.32
10	314	600	6.884	322.6	10.16	39.28	96.9	0	29.35
10	314	700	5.789	313.2	12.87	38.5	100.1	0	29.37
10	314	800	4.841	308.9	12.28	39.92	99.4	0	29.4
10	314	900	7.11	299.4	15.42	43.75	91.7	0	29.45
10	314	1000	9.89	298.1	17.27	46.29	85.6	0	29.47
10	314	1100	15.11	310.5	16.81	47.12	72.1	0	29.47
10	314	1200	18.8	321.8	12.88	46.53	63.9	0	29.47
10	314	1300	18.65	324.4	12.51	46.53	66.3	0	29.48
10	314	1400	17.79	323.8	14.31	44.85	69.41	0	29.49
10	314	1500	15.26	318	14.24	44.28	60.54	0	29.5
10	314	1600	14.41	323.2	14.67	42.94	62.5	0	29.51
10	314	1700	11.94	329.1	11.66	40.16	65.01	0	29.51
10	314	1800	9.15	319.3	12.53	38.09	70.6	0	29.5
10	314	1900	8.07	304.4	14.87	37.45	74.4	0	29.51
10	314	2000	8.13	301.8	15.22	37.55	77	0	29.53
10	314	2100	10.46	310.1	13.72	38.02	79.2	0	29.54
10	314	2200	10.31	317.1	12.81	38.46	81.5	0	29.55
10	314	2300	13.27	335.2	11.38	38.16	80.1	0	29.56
11	315	0	13.03	331.1	12.03	37.42	77.9	0	29.57
11	315	100	12.62	340.9	11.31	37.02	74.4	0	29.59
11	315	200	11.83	352.3	10.48	36.27	70.2	0	29.59
11	315	300	9	347.6	10.26	36.09	72.8	0	29.6
11	315	400	10.71	349.6	10.48	35.2	69.8	0	29.61
11	315	500	7.52	343.6	13.47	34.93	72	0	29.62
11	315	600	7.16	352.4	10.19	35.04	74.9	0	29.62
11	315	700	7.2	345.6	11.22	34.49	74.5	0	29.63

Day	DATE JD	TIME 24H	WS MPH	WD Deg	SIGMA Deg	AT DegF	RH %	RN inch	BP inHg
11	315	800	5.569	350.6	11.62	34.3	76	0	29.65
11	315	900	6.272	354.7	11.5	36.1	73.4	0	29.68
11	315	1000	8.43	350.4	13.95	37.76	74	0	29.7
11	315	1100	10.71	337.9	15.35	39.98	69.69	0	29.72
11	315	1200	9.58	327.4	21.35	40.98	67.88	0	29.72
11	315	1300	8.3	322.2	22.55	42.43	64.73	0	29.7
11	315	1400	8.05	313.8	25.95	43.26	62.68	0	29.7
11	315	1500	9.33	316	16.63	43.68	59.4	0	29.69
11	315	1600	8.19	333.9	13.15	43.57	59.07	0	29.68
11	315	1700	6.375	351.1	10.31	40.26	63.66	0	29.67
11	315	1800	5.971	26.62	5.868	35.3	79	0	29.65
11	315	1900	6.84	40.45	3.875	32.73	94.1	0	29.65
11	315	2000	4.915	43.32	1.224	30.61	100.3	0	29.65
11	315	2100	4.502	66.24	3.65	28.36	100.3	0	29.65
11	315	2200	2.862	72.3	0.229	26.97	100.2	0	29.65
11	315	2300	4.114	88.7	9.26	26.83	100.2	0	29.64
12	316	0	5.23	134.1	2.04	28.11	100.2	0	29.64
12	316	100	5.606	149.4	5.287	30.51	100.2	0	29.64
12	316	200	4.876	155.9	8.91	30.44	100.2	0	29.63
12	316	300	4.961	160.7	8.1	29.55	100.2	0	29.62
12	316	400	5.766	160.9	9.9	30.12	100.2	0	29.61
12	316	500	5.306	158.9	9.09	29.94	100.2	0	29.6
12	316	600	5.917	147.3	10.74	30.22	100.2	0	29.6
12	316	700	6.745	141.7	9.49	30.47	98.1	0	29.58
12	316	800	7.47	163.3	11.01	31.33	99.8	0	29.57
12	316	900	15.42	179.7	9.01	34.97	99.6	0	29.58
12	316	1000	18.39	177.7	9.25	38.45	90.6	0	29.58
12	316	1100	18.18	180	8.52	42.95	68.84	0	29.57
12	316	1200	16.79 (1)	182.1	8.51	47.34	63.49	0	29.53
12	316	1300	16.86 (1)	183	8.69	50.62	56.67	0	29.5
12	316	1400	16.85 (1)	185.5	8.32	52.31	52.21	0	29.48
12	316	1500	14.75	178.8	8.49	54.29	45.88	0	29.46
12	316	1600	14.86	180.3	7.46	53.91	46.93	0	29.44
12	316	1700	14.47	185.7	7.57	52.36	52.26	0	29.43
12	316	1800	13.1	189	8.22	51.41	52.97	0	29.42
12	316	1900	12.61	190.1	8.21	51.2	55.26	0	29.42
12	316	2000	10.22	191.2	7.55	50.94	58.7	0	29.42
12	316	2100	8.77	206.5	10.16	49.85	54.57	0	29.42
12	316	2200	4.868	235.6	16.55	47.82	60.42	0	29.43
12	316	2300	6.459	267.1	17.83	50.07	72.4	0	29.44
13	317	0	9.54	272.1	13.28	51.31	86.6	0	29.45
13	317	100	8.22	296.3	14.55	51.02	90.2	0	29.45
13	317	200	8.01	291.8	14.88	49.95	96.1	0	29.45
13	317	300	5.699	286.3	14.95	49.27	98.5	0	29.46
13	317	400	4.244	299.1	14.77	48.84	99.4	0	29.46
13	317	500	4.281	305.4	13.76	48.56	99.5	0	29.47
13	317	600	4.712	319.4	12.74	48.19	100.2	0	29.47
13	317	700	3.53	320.5	12.7	47.5	100.3	0	29.48
13	317	800	3.554	0.422	11.48	46.92	100.3	0	29.49
13	317	900	1.864	35.24	0.198	47.81	100.3	0	29.51
13	317	1000	2.919	31.79	1.005	49.07	99.9	0	29.52
13	317	1100	3.033	66.53	18.24	50.15	97.2	0	29.53
13	317	1200	3.317	185.6	16.98	50.76	95.1	0	29.53
13	317	1300	4.043	164.5	14.71	51.39	92.6	0	29.52
13	317	1400	5.675	106.8	15.12	52.04	92.7	0	29.51
13	317	1500	7.44	98.2	7.15	51.32	97.4	0	29.5
13	317	1600	7.9	99.2	5.799	51.11	96	0	29.5
13	317	1700	7.43	104.7	7.68	50.87	96.8	0	29.5

Day	DATE JD	TIME 24H	WS MPH	WD Deg	SIGMA Deg	AT DegF	RH %	RN inch	BP inHg
13	317	1800	7.91	123.9	8.97	50.75	91.6	0	29.49
13	317	1900	6.572	139.2	8.22	50.97	88	0	29.49
13	317	2000	5.732	129.3	8.62	50.89	91.8	0	29.49
13	317	2100	5.203	154.1	11.73	50.89	92.9	0	29.49
13	317	2200	6.729	144.9	16.63	50.98	93.3	0	29.48
13	317	2300	10.27	170.1	11.69	51.35	91.1	0	29.48
14	318	0	8.35	165.4	14.42	51.47	90.4	0	29.48
14	318	100	10.58	173.1	9.05	51.89	89.8	0	29.47
14	318	200	12.51	180.1	7.93	51.88	94.9	0	29.47
14	318	300	13.57	188.3	8.13	51.86	97	0	29.46
14	318	400	14.04	179.6	7.44	51.49	96.9	0	29.46
14	318	500	14.7	177.1	7.34	51.22	99.3	0	29.45
14	318	600	13.92	175.5	7.31	51.7	100.1	0	29.44
14	318	700	13.77	176	7.3	51.63	100.3	0	29.44
14	318	800	12.03	177.8	6.827	51.68	100.3	0	29.44
14	318	900	13.95	183.3	7.3	54.76	97.4	0	29.46
14	318	1000	14.47	181.8	7.44	56.26	94.5	0	29.46
14	318	1100	14.97	179.4	7.57	59.24	87	0	29.46
14	318	1200	14.7	178.4	8.01	63.15	76.3	0	29.44
14	318	1300	13.46	189.6	9.42	65.62	70.3	0	29.43
14	318	1400	15.22	185.4	8.56	65.84	71	0	29.41
14	318	1500	17	183.1	7.65	65.08	69.62	0	29.39
14	318	1600	14.25	185.1	7.73	63.09	72.4	0	29.38
14	318	1700	12.65	180.8	7.01	61.13	76	0	29.37
14	318	1800	13.02	180.4	7	60.47	78.4	0	29.36
14	318	1900	12.95	184.2	7.28	58.85	84	0	29.36
14	318	2000	14.3	181.2	7.79	59.37	81.8	0	29.38
14	318	2100	7.7	190.5	11.42	58.84	82.8	0	29.39
14	318	2200	7.48	179.8	10.21	57.96	85.7	0	29.39
14	318	2300	5.635	168.1	11.23	58.78	83.2	0	29.39
15	319	0	8.58	184.1	10.15	58.62	86.1	0	29.39
15	319	100	7.6	186.8	7.48	57.82	92	0	29.39
15	319	200	3.562	203.4	13.47	58.8	97.3	0	29.39
15	319	300	6.561	267.9	12.04	60.18	96	0	29.41
15	319	400	7.71	292.8	14.64	60.77	95.1	0	29.42
15	319	500	9.34	302.2	15.01	59.17	96.3	0	29.43
15	319	600	10.64	311.3	17.48	55.89	97.2	0	29.45
15	319	700	12.35	324.4	11.92	51.03	91.3	0	29.47
15	319	800	8.71	325.9	12.88	50.19	91.1	0	29.5
15	319	900	9.39	311.4	15.31	50.09	88.4	0	29.53
15	319	1000	9.66	304.5	17.19	50.23	83.9	0	29.55
15	319	1100	8.91	302.7	17.55	50.62	77.3	0	29.56
15	319	1200	10.54	310.4	14	50.5	78	0	29.56
15	319	1300	10.08	315.6	15.59	50.95	77	0	29.56
15	319	1400	10.82	326.2	12.48	50.1	78.4	0	29.55
15	319	1500	10.9	328.5	13.86	49.78	75	0	29.56
15	319	1600	8.57	333.6	13.18	49.18	72.8	0	29.57
15	319	1700	7.34	323.4	11.84	46.93	74.2	0	29.57
15	319	1800	4.153	328.2	8.62	43.56	82.4	0	29.56
15	319	1900	4.111	323.9	9.1	41.33	89.5	0	29.56
15	319	2000	4.535	324.3	9.59	40.14	97	0	29.56
15	319	2100	4.672	316.6	10.88	40.25	98	0	29.57
15	319	2200	4.563	329.1	8.77	40	99.5	0	29.58
15	319	2300	3.923	333.8	8.62	39.87	99.9	0	29.58
16	320	0	4.127	339.9	9.89	39.67	100.4	0	29.59
16	320	100	3.568	351.4	10.06	39.43	100.3	0	29.58
16	320	200	3.129	3.205	7.5	39.1	100.4	0	29.59
16	320	300	4.047	12.03	2.019	38.94	100.4	0	29.58

Day	DATE JD	TIME 24H	WS MPH	WD Deg	SIGMA Deg	AT DegF	RH %	RN inch	BP inHg
16	320	400	4.092	18.95	0.687	37.82	100.4	0	29.58
16	320	500	4.377	26.52	1.45	38.31	100.4	0	29.58
16	320	600	3.559	34 (2)	0.372	37.08	100.3	0	29.58
16	320	700	3.657	34.16 (2)	0.197	36.6	100.3	0	29.6
16	320	800	2.065	34.07 (2)	0.169	36.59	100.3	0	29.61
16	320	900	0.69	34.03 (2)	0.1	38.52	100.3	0	29.64
16	320	1000	2.401	40.07	37.95	41.22	100.4	0	29.65
16	320	1100	3.151	196.3	32.33	43.2	100.4	0	29.65
16	320	1200	2.939	307.8	16.78	44.48	100.2	0	29.65
16	320	1300	3.345	335.5	17.56	45.34	94	0	29.64
16	320	1400	6.131	29.1	11.46	46.94	69.31	0	29.63
16	320	1500	4.741	31.56	11.72	47.37	68.99	0	29.63
16	320	1600	4.161	15.46	8.95	45.94	77.6	0	29.63
16	320	1700	4.746	47.07	9.18	43.47	86.7	0	29.61
16	320	1800	4.255	54.79	1.031	42.12	90	0	29.62
16	320	1900	2.953	66.39	2.928	41.21	95.6	0	29.62
16	320	2000	4.171	0.563	18.92	38.93	100.3	0	29.63
16	320	2100	4.846	17.53	10.82	36.98	100.3	0	29.63
16	320	2200	5.376	71.9	4.188	33.11	100.3	0	29.62
16	320	2300	3.233	29.35	23.04	30.44	100.3	0	29.6
17	321	0	3.02	357.4	11.32	29.46	100.3	0	29.59
17	321	100	3.856	59.34	8.37	28.45	100.3	0	29.57
17	321	200	4.89	150.7	9.41	30.24	100.2	0	29.58
17	321	300	2.929	157.1	6.758	30.17	100.2	0	29.58
17	321	400	5.307	153.6	8.17	32.94	100.3	0	29.59
17	321	500	6.645	157.9	7.35	33.29	100.3	0	29.59
17	321	600	4.795	137.5	6.549	31.86	100.3	0	29.6
17	321	700	6.531	123.5	6.724	31.74	100.3	0	29.59
17	321	800	3.411	110.3	0.722	30.47 (4)	100.3	0	29.6
17	321	900	4.023	133.6	13.07	39.23 (4)	93.7	0	29.65
17	321	1000	5.374	186.1	12.32	43.76	82	0	29.69
17	321	1100	8.9	181.6	10.11	46.91	66.61	0	29.69
17	321	1200	6.641	185.3	15.79	50.83	51.78	0	29.66
17	321	1300	5.539	163.1	40.51	54.9	44.65	0	29.64
17	321	1400	7.44	145	24.76	56.24	38.89	0	29.62
17	321	1500	9.42	120	14.71	57.09	34.65	0	29.6
17	321	1600	9.89	127.4	13.03	57.17	35.55	0	29.59
17	321	1700	8.19	123.7	9.7	53.79	40.32	0	29.57
17	321	1800	8.32	143.7	7.85	50.58	42.65	0	29.55
17	321	1900	9.54	139.2	9.37	50.45	38.4	0	29.55
17	321	2000	7.12	163.5	16.44	50.32	41.51	0	29.55
17	321	2100	4.932	151.3	9.91	50.14	51.5	0	29.54
17	321	2200	6.05	146.6	9.58	50.53	67.66	0	29.53
17	321	2300	4.363	180.1	15.8	49.27	79	0	29.52
18	322	0	4.334	176.1	11.32	48.49	83	0	29.5
18	322	100	6.695	173.5	8.75	47.23	89.4	0	29.48
18	322	200	6.424	155.4	8.69	47.12	89.8	0	29.46
18	322	300	7.75	150.7	8.78	47.38	90.2	0	29.44
18	322	400	8.13	159.7	9.61	47.46	91.6	0	29.43
18	322	500	9.71	169.9	9.23	48.57	94.4	0	29.44
18	322	600	10.16	172.1	8.86	50.01	94.7	0	29.43
18	322	700	13.08	175.6	8.83	50.58	98.2	0	29.43
18	322	800	15.7	179.5	7.89	51.02	100.3	0	29.42
18	322	900	17.46	179.9	9.46	51.77	100.3	0	29.41
18	322	1000	18.14	186.7	8.58	52.96	100.3	0	29.41
18	322	1100	17.8	180	8.7	55.49	99.9	0	29.41
18	322	1200	18.84	181.3	8.58	57.39	97.8	0	29.38
18	322	1300	20.14	181.1	8.69	59.46	95.4	0	29.36

Day	DATE JD	TIME 24H	WS MPH	WD Deg	SIGMA Deg	AT DegF	RH %	RN inch	BP inHg
18	322	1400	19.88	178.3	8.81	61.49	92.2	0	29.34
18	322	1500	17.5	181.9	8.65	62.98	90.4	0	29.33
18	322	1600	14.45	176.8	9.45	61.63	93.7	0	29.33
18	322	1700	10.61	186.7	8.9	58.88	99.5	0	29.32
18	322	1800	10.87	177.2	9.18	57.88	100.4	0	29.32
18	322	1900	10.09	187.6	11.13	57.7	100.3	0	29.32
18	322	2000	7.37	206.6	9.58	55.74	100.3	0	29.32
18	322	2100	8.09	184.6	6.693	52.64	100.3	0	29.31
18	322	2200	7.89	200.2	9.05	53.08	100.3	0	29.31
18	322	2300	6.876	210.7	8.58	52.63	100.3	0	29.3
19	323	0	5.534	219.4	10.85	49.35	100.3	0	29.31
19	323	100	8.82	255.1	8.95	50	84	0	29.31
19	323	200	9.62	254.4	8.47	50.32	71.1	0	29.32
19	323	300	8.84	268.1	15.5	50.29	68.6	0	29.33
19	323	400	10.9	297.6	17.29	49.49	65.66	0	29.36
19	323	500	13.54	302.3	14.39	47.07	63.21	0	29.38
19	323	600	11.69	298.6	16.64	45.45	70.8	0	29.39
19	323	700	11.79	295.4	16.33	44.1	78.6	0	29.42
19	323	800	10.56	303.8	18.53	43.63	82	0	29.45
19	323	900	11.8	310.5	14.94	43.6	82	0	29.49
19	323	1000	13.68	299.9	15.61	43.81	80.4	0	29.52
19	323	1100	11.99	292.9	17.09	44.66	78.2	0	29.54
19	323	1200	11.72	293.4	17.41	46.33	73.9	0	29.54
19	323	1300	11.96	289.8	19.63	48.44	69.19	0	29.54
19	323	1400	11.11	299.4	17.57	48.96	66.71	0	29.52
19	323	1500	8.87	304.7	17.38	49.43	65.95	0	29.52
19	323	1600	7.81	305.8	17.37	48.51	66.87	0	29.51
19	323	1700	5.972	311.9	12.05	45.35	74.5	0	29.5
19	323	1800	7.12	304.4	13.03	43.14	80	0	29.51
19	323	1900	6.615	292.8	12.5	42.02	83.8	0	29.52
19	323	2000	5.548	268.5	9.34	39.83	91.8	0	29.52
19	323	2100	5.269	265.2	9.05	38.69	99.2	0	29.53
19	323	2200	6.299	254.2	6.659	37.5	100.3	0	29.55
19	323	2300	7.55	256.7	5.848	38.01	100.3	0	29.57
20	324	0	8.27	282.2	12.84	40.46	99.3	0	29.58
20	324	100	6.072	290.9	16.05	41.03	100	0	29.6
20	324	200	4.39	290	19.53	41	99.9	0	29.61
20	324	300	5.418	314.1	11.55	39.55	98.9	0	29.62
20	324	400	4.484	293.3	12.84	37.91	100.3	0	29.62
20	324	500	2.611	299.8	14.29	36.07	100.3	0	29.62
20	324	600	1.069	355.5	12.49	33.61	100.3	0	29.62
20	324	700	1.917	12.8	3.034	31.91	100.3	0	29.62
20	324	800	3.252	11.32	2.342	33.93	100.3	0	29.64
20	324	900	2.266	6.76	36.68	38.62	97.8	0	29.69
20	324	1000	2.981	194.9	45.82	42.45	92.7	0	29.73
20	324	1100	4.689	151.8	27.57	44.42	82.3	0	29.73
20	324	1200	4.566	105.7	19.45	45.53	70.9	0	29.72
20	324	1300	6.152	100.2	24.53	45.3	77	0	29.69
20	324	1400	6.336	83.2	15.22	47.11	71.9	0	29.68
20	324	1500	7.76	95.9	14.67	48.25	70.4	0	29.67
20	324	1600	7.5	111.1	12.16	46.66	73.4	0	29.65
20	324	1700	6.292	98.6	6.64	43.96	79.3	0	29.62
20	324	1800	6.683	95.9	7.25	40.08	88.8	0	29.6
20	324	1900	6.866	136.3	10.74	42.54	84.8	0	29.61
20	324	2000	8.41	129.2	11.19	43.13	82.1	0	29.59
20	324	2100	7.79	130.2	11.49	42.62	81.3	0	29.58
20	324	2200	6.027	127.4	12.06	42.11	82.5	0	29.56
20	324	2300	7.38	142.1	9.55	41.34	83.5	0	29.54

Day	DATE JD	TIME 24H	WS MPH	WD Deg	SIGMA Deg	AT DegF	RH %	RN inch	BP inHg
21	325	0	7.59	153.9	9.87	42.47	76.1	0	29.52
21	325	100	8.82	160.9	10.4	44.19	77.1	0	29.5
21	325	200	9.78	173.1	9.35	45.77	66.87	0	29.48
21	325	300	13.16	169.9	11.37	47.63	57.65	0	29.46
21	325	400	17.21	172.8	10.42	48.25	58	0	29.45
21	325	500	17.97	173	9.55	47.98	58.75	0	29.45
21	325	600	14.07	147.3	11.41	47.71	53.81	0	29.42
21	325	700	14.09	137.2	10.93	46.32	57.18	0	29.36
21	325	800	17.32	147.2	12.04	46.56	63.04	0	29.3
21	325	900	18.71	177	10.64	47.38	81	0.03	29.3
21	325	1000	16.46	166.3	11.34	44.62	100.3	0.64	29.31
21	325	1100	23.13	142	11.32	46.42	100.3	2.63	29.2
21	325	1200	21.58	139.6	12.71	48.37	100.3	0.89	29.12
21	325	1300	16.94	149.9	13.49	51.2	100.3	0	29.09
21	325	1400	16.65	186.1	13.33	51.36	100.3	0	29.07
21	325	1500	19.85	169.7	11.8	52.72	100.3	0.2	29.04
21	325	1600	15.78	177.8	10.02	53.82	100.3	0	29.03
21	325	1700	14.97	176.5	9.11	54.57	100.3	0	29.01
21	325	1800	14.29	185.7	9.21	55.11	100.3	0	29.01
21	325	1900	11.3	184.6	8.72	54.33	100.3	0	29.02
21	325	2000	9.24	182.7	8.38	53.49	100.3	0	29.03
21	325	2100	8.07	287.8	18.26	53.71	98.7	0	29.04
21	325	2200	9.2	288	16.49	52.63	86.5	0	29.06
21	325	2300	14.92	262.5	11.31	51.55	78.2	0	29.08
22	326	0	12.71	250.7	13.26	50.68	83.5	0	29.09
22	326	100	13.1	266.3	12.58	50.42	84.1	0	29.11
22	326	200	12.84	258.4	10.38	49.8	79.7	0	29.1
22	326	300	11.65	244.3	10.38	49.32	77.4	0	29.12
22	326	400	11.74	242.2	10.11	48.78	74	0	29.12
22	326	500	9.4	246.7	10.39	48.09	76.2	0	29.12
22	326	600	6.586	248.3	11.83	47.31	80.4	0	29.12
22	326	700	15.58	287.9	16.91	46.53	74.9	0	29.16
22	326	800	13.76	296.6	15.35	43.75	74.9	0	29.19
22	326	900	15.2	293.8	15.91	41.53	71.5	0	29.21
22	326	1000	13.82	289.7	16.99	41.2	71.7	0	29.22
22	326	1100	16.58	292	16.3	39.91	67.75	0	29.25
22	326	1200	17.37	283.9	16.32	39.71	63.64	0	29.24
22	326	1300	18.97	281.3	16.44	40.46	58.76	0	29.25
22	326	1400	19.62	283	15.89	39.48	56.45	0	29.27
22	326	1500	19.89	279.1	16.37	38.53	55.21	0	29.27
22	326	1600	18.9	279.2	16	38.51	56.33	0	29.29
22	326	1700	19.45	276.4	14.37	35.83	56.56	0	29.3
22	326	1800	16.88	279	15.18	34.52	60.34	0	29.32
22	326	1900	14.83	280.4	15.96	33.67	59.4	0	29.33
22	326	2000	11.87	279.5	15.69	32.81	63.19	0	29.32
22	326	2100	11.49	281.1	15.84	32.39	63.5	0	29.32
22	326	2200	9.41	273.6	13.68	31.56	64.67	0	29.3
22	326	2300	4.706	280.2	13.33	30.07	71.4	0	29.28
23	327	0	9.43	272.5	12.1	31.85	69.55	0	29.27
23	327	100	18.14	272.3	14.5	34.24	56.29	0	29.26
23	327	200	18.31	265.9	12.73	34.86	60.91	0	29.24
23	327	300	17.54	252.5	11.66	34.73	68.83	0	29.22
23	327	400	14.29	248.9	14.82	34.83	75.9	0	29.2
23	327	500	15.69	270	13.81	36.25	68.7	0	29.17
23	327	600	15.71	269	12.6	36.64	67.91	0	29.15
23	327	700	14.36	275.5	14.94	36.09	73.6	0	29.14
23	327	800	21.56	263.6	12.64	34.56	87.1	0	29.12
23	327	900	21.77	263.1	13.4	35.33	85.8	0	29.12

Day	DATE JD	TIME 24H	WS MPH	WD Deg	SIGMA Deg	AT DegF	RH %	RN inch	BP inHg
23	327	1000	13.93	296.5	17.27	31.45	100.3	0	29.13
23	327	1100	15.15	288.8	17.5	31.08	100.3	0	29.13
23	327	1200	18.34	308.9	15.46	32.69	95.3	0	29.13
23	327	1300	19.09	324.8	13.02	30.27	98	0	29.15
23	327	1400	18.99	322	12.83	29.13	86.1	0	29.16
23	327	1500	19.61	326.3	12.81	28.18	79.4	0	29.2
23	327	1600	20.89	318.5	13.26	27.42	57.04	0	29.23
23	327	1700	16.56	315.7	14.31	25.17	52.43	0	29.25
23	327	1800	13.56	313.1	14.75	24.16	54.62	0	29.28
23	327	1900	9.94	298.1	16.16	23.44	63.12	0	29.3
23	327	2000	10.08	296.2	16.71	23.02	78.5	0	29.31
23	327	2100	11.37	294.7	15.47	23.16	89.6	0	29.32
23	327	2200	10.15	300	16.04	23.21	88.8	0	29.33
23	327	2300	9.83	297.2	16.27	22.8	85.2	0	29.33
24	328	0	9.55	292.3	15.76	23.46	84.3	0	29.34
24	328	100	11.24	287.1	16.8	24	81.3	0	29.35
24	328	200	10.97	285.1	16.45	23.93	80.7	0	29.36
24	328	300	13.41	274.7	14.2	23.64	86.8	0	29.37
24	328	400	14.01	274.1	13.22	24.91	85.9	0	29.37
24	328	500	13.84	280.5	15.04	25.05	87.1	0	29.38
24	328	600	13.7	281.2	15.39	25.02	88.5	0	29.38
24	328	700	11.72	287.4	16.3	24.79	88.6	0	29.4
24	328	800	10.29	288.9	15.41	25.26	88.4	0	29.42
24	328	900	10.31	295.3	16.73	27.23	81.7	0	29.43
24	328	1000	10.45	295.9	17.49	29.1	77.7	0	29.44
24	328	1100	9.58	307.4	17.31	30.92	76.1	0	29.44
24	328	1200	9.42	289.7	21.79	33.03	68.37	0	29.41
24	328	1300	9.33	260.4	20.03	35.04	63.54	0	29.38
24	328	1400	9.1	212.8	19.78	36.66	60.32	0	29.35
24	328	1500	10.8	190.8	13.9	35.62	66.11	0	29.32
24	328	1600	10.96	190.2	10.31	35.65	64.72	0	29.27
24	328	1700	12.55	183.7	11.34	35.21	64.19	0	29.23
24	328	1800	10.48	167.2	11.89	34.21	64.79	0	29.19
24	328	1900	16.85	190	8.57	35.73	67.5	0	29.18
24	328	2000	15.9	188.2	8.77	36.08	69.21	0	29.17
24	328	2100	14.96	190.6	8.83	36.62	70.5	0	29.16
24	328	2200	15.56	189.9	8.57	36.73	74	0	29.14
24	328	2300	15.04	193.7	9.14	38.21	73.4	0	29.13
25	329	0	13.76	196.7	9.69	39.55	69.99	0	29.12
25	329	100	14.18	199.9	9.67	40.73	70.5	0	29.11
25	329	200	12.93	203.2	9.45	41.23	71.7	0	29.11
25	329	300	9.46	205.2	10.69	40.99	74.1	0	29.12
25	329	400	7.81	209.6	14.59	40.85	76.7	0	29.13
25	329	500	10.92	260.7	12.43	41.88	77.6	0	29.14
25	329	600	10.04	252.6	10.33	41.61	77.9	0	29.16
25	329	700	11.07	245.9	9.74	41.4	77.7	0	29.17
25	329	800	8.78	252.3	9.75	40.2	82.7	0	29.18
25	329	900	5.332	234.9	11.94	40.5	89.6	0	29.2
25	329	1000	9.86	266.3	16.11	41.99	83.9	0	29.22
25	329	1100	10.38	293.5	17.11	43.74	75.5	0	29.25
25	329	1200	11.15	288.7	16.1	44.35	66.02	0	29.25
25	329	1300	12.03	286	19.29	46.23	56.43	0	29.25
25	329	1400	14.86	269.4	14.26	46.42	47.65	0	29.23
25	329	1500	11.39	282.3	17.52	46.97	46.36	0	29.23
25	329	1600	10.55	277.9	14.36	45.14	49.99	0	29.23
25	329	1700	11.97	262.9	10.32	42.77	52.36	0	29.23
25	329	1800	7.31	268.7	11.35	39.28	58.01	0	29.24
25	329	1900	7.41	257.9	10.03	36.98	65.71	0	29.24

Day	DATE JD	TIME 24H	WS MPH	WD Deg	SIGMA Deg	AT DegF	RH %	RN inch	BP inHg
25	329	2000	9.27	234.6	9.48	38.35	65.13	0	29.25
25	329	2100	8.74	251.2	22.68	39.16	67.7	0	29.25
25	329	2200	5.174	243.5	16.89	37.73	77.4	0	29.26
25	329	2300	9.93	278.1	15.7	39.23	59.34	0	29.27
26	330	0	8.07	261.1	9.55	36.48	57.47	0	29.27
26	330	100	10.68	270.2 (2)	12.77	36.55	56.67	0	29.28
26	330	200	10.61	269.6 (2)	11.75	35.14	63.57	0	29.3
26	330	300	10.44 (1)	269.4 (2)	12.13	35.06	67.1	0	29.32
26	330	400	10.49 (1)	285.6	16.24	35.16	71.3	0	29.34
26	330	500	10.48 (1)	291	16.95	33.93	81	0	29.37
26	330	600	10	304.8	15.04	32.61	89.5	0	29.39
26	330	700	9.61	313.7	13.43	31.75	87.2	0	29.42
26	330	800	10.09	318	13.12	31.36	84.7	0	29.45
26	330	900	9.19	310.1	14.41	31.48	81.2	0	29.48
26	330	1000	10.11	315.1	16.64	32.33	73.7	0	29.51
26	330	1100	11.08	325.1	15.7	32.35	72.4	0	29.54
26	330	1200	12.96	317.8	16.25	32.48	72.4	0	29.56
26	330	1300	12.68	324.7	19.01	31.95	74	0	29.57
26	330	1400	11.25	325.9	17.31	32.44	64.02	0	29.58
26	330	1500	9.56	326.5	16.37	32	59.26	0	29.6
26	330	1600	7.96	335.1	12.99	31.49	59.27	0	29.62
26	330	1700	6.122	0.315	9.91	27.62	68.12	0	29.63
26	330	1800	5.754	26.82	2.668	24.32	80.2	0	29.62
26	330	1900	5.705	41.14	4.138	22.54	91	0	29.64
26	330	2000	5.865	56.51	1.645	20.46	98.4	0	29.65
26	330	2100	5.995	50.62	3.523	20.84	94.7	0	29.65
26	330	2200	4.891	55.93	0.823	19.56	98.1	0	29.67
26	330	2300	5.092	73.5	10.06	18.16	100.2	0	29.68
27	331	0	6.432	88.2	2.742	18.31	100.2	0	29.68
27	331	100	5.523	99.8	7.3	19.53	100.2	0	29.68
27	331	200	4.93	113.4	10.41	20.14	100.2	0	29.7
27	331	300	6.177	111	7.6	20.07	100.2	0	29.71
27	331	400	4.998	142.2	10.63	20.38	97.5	0	29.71
27	331	500	6.552	116.9	11.84	20.57	88	0	29.7
27	331	600	7.89	106.7	9.49	20.27	89	0	29.69
27	331	700	6.192	118.3	14.41	19.76	90.9	0	29.68
27	331	800	5.842	158	11.08	19.28 (4)	84.9	0	29.68
27	331	900	7.15	151.8	12.31	24.35 (4)	67.68	0	29.72
27	331	1000	9.68	138.3	14.52	26.85	62.35	0	29.72
27	331	1100	10.66	118.7	13.19	30.11	59.58	0	29.71
27	331	1200	11.66	117.3	13.31	33.4	55.09	0	29.68
27	331	1300	11.56	136.6	13.92	34.02	51.88	0	29.64
27	331	1400	13.96	127.5	13.47	34.03	53.76	0	29.6
27	331	1500	13.23	133.5 (2)	11.84	33.22	54.73	0	29.57
27	331	1600	14.17	132.6 (2)	11.97	32.77	54.33	0	29.55
27	331	1700	16.82	132.8 (2)	11.9	32.58	55.28	0	29.52
27	331	1800	15.07	132.7 (2)	12.16	32.47	62.16	0	29.47
27	331	1900	12.85	150.3	13.24	31.29	87.4	0.02	29.43
27	331	2000	15.31	147.6	12.35	30.06	100.1	0.04	29.39
27	331	2100	13.68	138.3	11.86	29.53	100.3	0.11	29.34
27	331	2200	15.02	144.3	12.64	31.17	100.3	0.01	29.27
27	331	2300	17.87	149.5	11.9	34.6	100.2	0.02	29.21
28	332	0	17.25	155.6	13.32	36.66	100.1	0	29.14
28	332	100	14.16	159	12.99	37.83	100.3	0.06	29.09
28	332	200	14.47	165.1	12.74	40.07	100.3	0	29.05
28	332	300	15.02	160.1	12.43	41.73	100.3	0	29.02
28	332	400	11.2	162.1	12.96	42.45	100.3	0.01	28.98
28	332	500	8.41	164.1	17.75	42.64	100.3	0.02	28.92

Day	DATE JD	TIME 24H	WS MPH	WD Deg	SIGMA Deg	AT DegF	RH %	RN inch	BP inHg
28	332	600	9.38	165.6	31.29	45.05	100.3	0	28.88
28	332	700	11.03	189	12.99	44.98	100.4	0	28.87
28	332	800	14.65	183.2	9.46	45.49	100.4	0	28.83
28	332	900	14.54	170.7	10.1	46.85	100.4	0	28.8
28	332	1000	15.71	177.7	10.1	50.14	100.3	0	28.77
28	332	1100	18.12	185.3	8.66	51.89	100.3	0	28.74
28	332	1200	19.16	190.5	9.57	54.17	100.3	0	28.72
28	332	1300	16.83	244	13.58	53.14	100.3	0.03	28.75
28	332	1400	14.35	224.4	11.59	50.81	95.6	0	28.75
28	332	1500	9.84	231.1	12.88	54.29	82.9	0	28.78
28	332	1600	8.31	302.5	19.07	53.28 (4)	82.4	0	28.81
28	332	1700	10.18	313.5	12.99	46.3 (4)	93.2	0	28.82
28	332	1800	5.052	293	13.29	43.23	96	0	28.85
28	332	1900	5.394	228.7	21.46	41.84	95	0	28.88
28	332	2000	6.299	275.7	16.79	43.55	85.4	0	28.91
28	332	2100	14.71	250.3	11.09	45.14	72.9	0.04	28.93
28	332	2200	19.39	245.7	10.79	45.15	66.15	0.12	28.96
28	332	2300	22.74	248.5	10.92	44.7	64.58	0	28.98
29	333	0	21.76	245.6	10.73	44.08	62.84	0	29
29	333	100	19.1	240.7	10.3	43.62	60.81	0	29.03
29	333	200	19.72	239	10.75	43.29	58.69	0	29.05
29	333	300	19.08	235.3	10.53	42.54	58.33	0	29.06
29	333	400	19.47	233.5	10.79	42.24	56.35	0	29.06
29	333	500	12.93	221.9	11.98	41.05	59.24	0	29.07
29	333	600	14.94	226.6	10.86	41.07	57.89	0	29.07
29	333	700	18.25	228.8	10.68	41.37	56.76	0	29.08
29	333	800	18.41	233	9.37	41.74	57.24	0	29.1
29	333	900	18.1	241.4	11.65	43.16	57.86	0	29.15
29	333	1000	17.99	256.3	12.23	43.88	60.65	0	29.18
29	333	1100	19.59	261.9	11.03	44.63	61.07	0	29.21
29	333	1200	21.79	258.9	12.49	44.99	61.02	0	29.22
29	333	1300	21.42	255.1	11.85	45.45	59.98	0	29.24
29	333	1400	20.32	263.3	11.8	45.09	61.99	0	29.25
29	333	1500	11.43	281.2	15.26	44.8	64.29	0	29.27
29	333	1600	7.34	283.1	23.4	43.26	70.6	0	29.28
29	333	1700	6.285	305.8	20.73	40.89 (4)	77.2	0	29.29
29	333	1800	6.32	27.47	7.53	35.15 (4)	97.1	0	29.3
29	333	1900	5.877	355.4	11.38	33.73	100.3	0	29.31
29	333	2000	4.255	314.2	24.21	35.52	95.3	0	29.32
29	333	2100	2.975	318.1	25.19	33.08	99.5	0	29.32
29	333	2200	4.642	90.6	30.92	30.07	100.3	0	29.32
29	333	2300	5.619	111.4	8.05	30.49	100.3	0	29.32
30	334	0	6.186	148.8	7.49	31.83	100.3	0	29.32
30	334	100	6.826	174.8	8.44	32.75	100.3	0	29.32
30	334	200	6.982	194.7	9.88	33.65	100.3	0	29.33
30	334	300	5.578	210.7	9.22	33.27	100.3	0	29.32
30	334	400	4.669	189.4	10.58	34.17	100.3	0	29.32
30	334	500	3.995	180	8.44	34.14	100.3	0	29.32
30	334	600	5.204	194.1	9.98	34.71	100.3	0	29.32
30	334	700	3.987	200.5	16.89	34.83	100.3	0	29.33
30	334	800	4.203	184.6	19.7	34.93	100.3	0	29.33
30	334	900	8.02	197.4	12.28	35.37	99.7	0	29.33
30	334	1000	8.16	231.4	19.49	36.05	96.3	0	29.35
30	334	1100	9.72	300.4	14.47	34.4	100.3	0	29.36
30	334	1200	10.25	285.5	15.51	33.41	100.3	0	29.36
30	334	1300	12.89	273.8	14.85	33.78	97.6	0	29.37
30	334	1400	14.56	273.2	15.05	37.06	80	0	29.38
30	334	1500	13.76	273.5	14.89	38.35	69.29	0	29.4

Day	DATE JD	TIME 24H	WS MPH	WD Deg	SIGMA Deg	AT DegF	RH %	RN inch	BP inHg
30	334	1600	9.82	283.4	16.97	36	73.1	0	29.4
30	334	1700	10.75	276.2	13.48	34.4	85.3	0	29.4
30	334	1800	9.99	265	9.59	33.24	97.4	0	29.41
30	334	1900	7.3	274.7	13.28	33.93	92.4	0	29.43
30	334	2000	6.472	281	14.52	34.32	89.5	0	29.46
30	334	2100	7.55	283.7	14.88	34.54	90.4	0	29.48
30	334	2200	7.41	277.4	14.34	34.56	92.2	0	29.5
30	334	2300	8.4	270.9	11.83	34.4	93.3	0	29.51
1-Dec	335	0	7.92	265.1	11.21	34.23	89.9	0	29.51
1	335	100	6.43	268.5	14.88	32.86	85.7	0	29.52
1	335	200	6.248	290.9	14.7	32.08	84.1	0	29.52
1	335	300	8.57	272.2	12.94	33.01	81.1	0	29.53
1	335	400	7.28	270.6	11.47	32.78	79.6	0	29.54
1	335	500	5.385	272.9	12.19	32.03	80.5	0	29.54
1	335	600	5.702	264.6	12.13	31.27	82.3	0	29.56
1	335	700	5.52	241.6	10.37	31.96	83.2	0	29.59
1	335	800	6.184	237.7	8.89	31.97	83.9	0	29.6
1	335	900	6.627	233	10.37	33.53	79.9	0	29.63
1	335	1000	7.11	230.5	11.72	34.94	77.1	0	29.64
1	335	1100	6.044	221.1	18.03	35.96	74.2	0	29.64
1	335	1200	6.392	233.2	22.11	36.8	74.6	0	29.64
1	335	1300	5.371	231.4	17.99	37.79	74.3	0	29.63
1	335	1400	6.237	189.9	12.39	38.13	76.2	0	29.61
1	335	1500	6.302	209.8	16.17	39.2	74	0	29.61
1	335	1600	5.979	191.4	9.3	39.63	73.7	0	29.6
1	335	1700	6.089	195.1	12.03	37.48	76.8	0	29.57
1	335	1800	6.864	161.8	10.01	35.02	83	0	29.55
1	335	1900	7.63	157.9	10.95	34.71	83.8	0	29.53
1	335	2000	12.15	174.9	8.69	35.94	85.7	0	29.51
1	335	2100	12.64	174.4	8.75	36.66	83.5	0	29.49
1	335	2200	16.7	187.1	8.19	37.97	77.2	0	29.46
1	335	2300	18.64	191.7	8.92	38.2	75.6	0	29.45
2	336	0	20.63	190.5	8.12	38.38	73.5	0	29.43
2	336	100	17.98	186.5	7.93	38.49	72.8	0	29.43
2	336	200	17.11	191.7	8.86	39.38	69.95	0	29.43
2	336	300	16.59	190.8	8.53	40.03	66.27	0	29.43
2	336	400	15.74	181.4	7.34	39.9	65.25	0	29.42
2	336	500	14.37	181.8	7.29	39.47	66.09	0	29.41
2	336	600	14.15	182.8	7.47	38.92	73.2	0	29.4
2	336	700	14.5	183.1	7.17	38.55	73.2	0	29.38
2	336	800	15.46	185.1	7.28	39.75	65.93	0	29.37
2	336	900	14.04	183	7.25	42.42	57.09	0	29.39
2	336	1000	14.46	186.1	8.26	45.58	51.24	0	29.4
2	336	1100	13.32	177.7	8.94	48.97	46.69	0	29.4
2	336	1200	11.36	213.3	15.52	53.68	40.14	0	29.39
2	336	1300	12.05	220	11.33	56.12	35.02	0	29.36
2	336	1400	10.65	224.9	12.36	57.63	34.32	0	29.36
2	336	1500	10.22	246.2	11.8	58.1	36.45	0	29.36
2	336	1600	8.7	234.9	7.8	57.15	38.46	0	29.36
2	336	1700	6.849	217.6	8.63	52.92	41.87	0	29.35
2	336	1800	6.589	196.5	7.71	49.32	46.11	0	29.34
2	336	1900	5.575	203.7	13.16	48.19	45.85	0	29.35
2	336	2000	6.444	184.3	4.956	47.2	52.18	0	29.37
2	336	2100	7.4	189.5	5.195	44.63	58.58	0	29.38
2	336	2200	8.46	183.1	4.852	42.92	73.4	0	29.39
2	336	2300	8.17	179.7	7.31	43.55	68.23	0	29.41
3	337	0	7.98	183	7.03	41.63	80.3	0	29.42
3	337	100	7.68	181.4	6.099	40.5	80.6	0	29.42

Day	DATE JD	TIME 24H	WS MPH	WD Deg	SIGMA Deg	AT DegF	RH %	RN inch	BP inHg
3	337	200	7.42	180.5	6.268	39.06	77.1	0	29.42
3	337	300	7.3	181.8	6.475	39.24	80.4	0	29.43
3	337	400	6.905	180.9	7.18	39.06	71.7	0	29.44
3	337	500	6.346	164.8	8.41	39.85	70.6	0	29.44
3	337	600	5.881	166.6	8.99	39.1	80.2	0	29.44
3	337	700	6.889	165.8	10.19	40.21	78.2	0	29.45
3	337	800	7.66	181.6	13.4	40.39	81.6	0	29.46
3	337	900	11.08	175.5	10.39	41.38	79.7	0	29.48
3	337	1000	11.76	171.5	9.52	43.38	74.6	0	29.49
3	337	1100	11.76	178.5	9.09	46.01	67.29	0	29.5
3	337	1200	10.95	174.4	9.63	48.56	60.14	0	29.48
3	337	1300	11.3	185.1	8.53	53.13	53.89	0	29.47
3	337	1400	8.89	183.6	7.6	53.35	55.44	0	29.46
3	337	1500	7.13	170.5	9.96	54.09	52.54	0	29.45
3	337	1600	4.651	146.4	10.65	55.11	50.58	0	29.44
3	337	1700	6.557	168.2	15.77	52.88	54.15	0	29.44
3	337	1800	10.24	174.8	8.4	51.74	54.84	0	29.43
3	337	1900	9.52	175.8	8.48	49.54	61.23	0	29.42
3	337	2000	7.79	175.6	8.38	47.9	65.01	0	29.43
3	337	2100	10.4	178.5	7.02	48.03	65.1	0	29.44
3	337	2200	11.78	180.3	10	49.04	61.36	0	29.43
3	337	2300	12.58	187.6	7.98	49.22	62.46	0	29.43
4	338	0	11.52	183.5	7.68	49.22	61.61	0	29.44
4	338	100	11.67	181.5	7.79	49.31	60.8	0	29.44
4	338	200	10.17	179.4	7.87	49.09	62.33	0	29.45
4	338	300	9.26	179.4	7.64	49.29	59.94	0	29.47
4	338	400	9.29	176.9	9.65	49.18	59.86	0	29.47
4	338	500	8.03	169.2	9.65	48.5	61.5	0	29.48
4	338	600	6.872	177.8	9.27	46.97	64.88	0	29.49
4	338	700	8.49	179.2	7.82	48.17	67.19	0	29.52
4	338	800	7.02	181.8	9.25	47.58	72.8	0	29.55
4	338	900	6.446	179.9	13.69	48.79	71.6	0	29.56
4	338	1000	9.24	176.8	9.33	49.74	70.1	0	29.58
4	338	1100	8.49	178.9	9.51	51.93	68.78	0	29.59
4	338	1200	7.14	181.5	8.58	53.04	71.2	0	29.58
4	338	1300	5.798	186.8	10.06	53.51	71.5	0	29.58
4	338	1400	3.715	164.4	13.05	52.71	72.4	0	29.57
4	338	1500	2.779	107.5	9.1	52.51	76	0	29.56
4	338	1600	3.105	88.5	11.17	52.81	77.8	0	29.56
4	338	1700	5.061	49.86	8.17	51.75	86.2	0	29.56
4	338	1800	5.045	13.34	9.15	49.72	96.1	0	29.55
4	338	1900	4.699	68.7	23.24	49.29	99.5	0	29.54
4	338	2000	1.566	317.3	8.16	47.86	100.3	0	29.54
4	338	2100	4.289	175.2	29.7	48	100.3	0	29.52
4	338	2200	4.499	154.4	9.16	48.35	100.3	0	29.5
4	338	2300	4.524	149.8	11.22	49.46	95.9	0	29.48
5	339	0	6.104	139.7	11.45	51.99	87.9	0	29.46
5	339	100	6.206	149.4	11.06	52.53	89.4	0	29.44
5	339	200	10.87	178.7	8	51.23	97.4	0.03	29.42
5	339	300	8.97	170.7	9.4	49.44	100.3	0.08	29.39
5	339	400	4.17	153.5	9.87	49.01	100.3	0.04	29.35
5	339	500	5.151	156.9	12.04	49.28	100.3	0.17	29.32
5	339	600	8.42	121	10.41	50.07	100.3	0.25	29.29
5	339	700	9.28	116.2	9.94	49.94	100.3	0.12	29.25
5	339	800	7.78	121.7	8.4	50.26	100.3	0.11	29.21
5	339	900	6.133	156.2	11.25	50.2	100.3	0.17	29.19
5	339	1000	7.79	173.2	8.75	50.43	100.3	0.16	29.16
5	339	1100	9.65	172.7	8.4	50.97	100.3	0.28	29.14

Day	DATE JD	TIME 24H	WS MPH	WD Deg	SIGMA Deg	AT DegF	RH %	RN inch	BP inHg
5	339	1200	11.38	174.8	8.7	52.04	100.3	0.03	29.1
5	339	1300	10.83	178.2	7.3	52.03	100.3	0	29.08
5	339	1400	8.07	183.6	8.27	53.21	100.3	0	29.07
5	339	1500	5.861	220.5	14.77	53.26	100.3	0	29.08
5	339	1600	7.25	283.9	14.35	55.37	100.3	0	29.1
5	339	1700	7.66	282.1	13.12	54.76	100.3	0	29.13
5	339	1800	6.506	296.8	15.36	53.71	100.3	0	29.15
5	339	1900	8.57	289.3	14.63	53.47	100.3	0	29.18
5	339	2000	11.58	286.5	14.01	52.17	100.3	0	29.21
5	339	2100	11.05	282.7	15.03	51.46	100.3	0	29.24
5	339	2200	12.17	292.2	13.19	50.46	100.3	0	29.27
5	339	2300	8.29	300.3	12.74	48.7	100.3	0	29.26
6	340	0	6.402	286.1	15.43	48.25	100.3	0	29.28
6	340	100	8.1	284.7	14.48	49.48	100.3	0	29.3
6	340	200	8.43	291.5	14	49.41	100.3	0	29.31
6	340	300	3.811	306.4	13.81	48.99	100.3	0	29.33
6	340	400	2.631	337.7	9.63	48.45	100.3	0	29.32
6	340	500	2.729	276.7	12.21	47.88	100.3	0	29.33
6	340	600	3.999	160.4	9.26	48.04	100.3	0	29.34
6	340	700	5.872	181.9	5.825	47.78	100.3	0	29.33
6	340	800	6.633	183.9	6.334	48.03	100.3	0	29.34
6	340	900	7.27	182.4	8.5	48.65	100.3	0	29.33
6	340	1000	9.55	187.8	7.47	49.72	100.3	0	29.33
6	340	1100	6.443	201	9.4	50.4	100.3	0	29.33
6	340	1200	6.392	225.8	10.37	51.85	100.3	0	29.33
6	340	1300	5.393	263.7	17.37	50.97	100.3	0	29.32
6	340	1400	4.547	317.8	13.58	49.91	100.3	0	29.32
6	340	1500	10.49	334.5	10.27	46.19	100.3	0	29.32
6	340	1600	7.58	350.8	10.48	44.05	100.3	0.02	29.32
6	340	1700	6.67	349	11.58	42.55	100.4	0.03	29.32
6	340	1800	7.87	338	11.86	41.41	100.4	0.1	29.34
6	340	1900	8.37	328.4	10.36	40.61	100.3	0	29.35
6	340	2000	8.6	325.2	10.92	39.82	100.3	0	29.36
6	340	2100	8.02	322.2	11.65	38.73	100.3	0	29.36
6	340	2200	7.03	313.5	16.53	38.36	100.3	0	29.36
6	340	2300	7.29	301.7	14.72	37.91	100.3	0	29.35
7	341	0	6.432	313.5	14.33	37.35	100.3	0	29.34
7	341	100	5.828	316.3	15	36.99	100.3	0	29.33
7	341	200	6.681	309.1	13.74	36.08	100.3	0.06	29.32
7	341	300	5.13	352.7	11.76	34.08	100.3	0.04	29.31
7	341	400	3.572	351.9	10.44	32.47	100.3	0.06	29.29
7	341	500	4.361	351	10.34	32.23	100.3	0.11	29.28
7	341	600	4.544	347.6	11.64	32.17	100.3	0.14	29.26
7	341	700	3.865	1.813	7.6	32.06	100.3	0.07	29.24
7	341	800	2.88	25.55	7.15	31.93	100.3	0.09	29.22
7	341	900	3.989	14.95	10.23	32	100.3	0.07	29.2
7	341	1000	4.479	19.75	8.56	32.48	100.3	0.03	29.19
7	341	1100	6.879	18.26	10.13	32.39	100.3	0.04	29.18
7	341	1200	9.67	13.42	9.45	31.67	100.3	0.03	29.16
7	341	1300	10.28	9.4	8.87	30.09	100.3	0.07	29.15
7	341	1400	9.11	10.15	9.47	29.11	100.3	0.01	29.14
7	341	1500	8.27	0.566	10.27	28.41	100.3	0.02	29.15
7	341	1600	9.24	1.703	9.09	27.3	100.3	0	29.18
7	341	1700	7.12	358.4	8.99	27.03	100.2	0.01	29.22
7	341	1800	7.47	358.7	10.05	27.13	100.2	0.02	29.25
7	341	1900	9.37	348.1	10.76	27.23	100.2	0	29.3
7	341	2000	9.58	337.1	10.71	26.6	100.2	0	29.35
7	341	2100	7.13	344.8	10.6	26.07	100.2	0	29.37

Day	DATE JD	TIME 24H	WS MPH	WD Deg	SIGMA Deg	AT DegF	RH %	RN inch	BP inHg
7	341	2200	5.849	335.9	11.59	26.31	100.2	0	29.4
7	341	2300	7.16	339.1	11.02	26.14	100.2	0	29.42
8	342	0	7.27	351.9	10.22	24.8	100.2	0	29.45
8	342	100	7.54	350.7	10.4	23.73	100.3	0	29.49
8	342	200	7.66	331.5	12.31	23.91	100.3	0	29.53
8	342	300	8.08	337.3	12.29	23.8	100.3	0	29.56
8	342	400	9.65	332	10.83	23.14	100.3	0	29.57
8	342	500	7.66	322	12.94	22.19	100.2	0	29.58
8	342	600	6.564	290.6	15.68	21.3	100.2	0	29.61
8	342	700	6.288	291.4	17.02	20.57	100.2	0	29.63
8	342	800	6.781	300	15.01	20.21	100.2	0	29.65
8	342	900	6.505	296	16.91	22.04	100.2	0	29.68
8	342	1000	7.83	298.3	16.05	23.42	99.3	0	29.71
8	342	1100	8.52	303.1	16.03	25.01	94.8	0	29.72
8	342	1200	9.42	300.2	15.53	25.7	91.9	0	29.71
8	342	1300	9.03	302.5	17.83	27.21	87.9	0	29.71
8	342	1400	8.25	301.2	17.37	26.82	89.1	0	29.71
8	342	1500	7.07	300.2	18.65	27.51	86.8	0	29.71
8	342	1600	6.94	309.9	15.14	27.09	86.8	0	29.71
8	342	1700	5.004	305.7	14.68	24.07	96.3	0	29.7
8	342	1800	4.684	303.9	13.19	22.23	100.2	0	29.69
8	342	1900	3.435	304.5	15.65	20.9	100.2	0	29.68
8	342	2000	1.285	0.784	8	18.87	100.2	0	29.68
8	342	2100	2.404	12.45	10.02	21.65	100.2	0	29.68
8	342	2200	2.205	165.8	23.75	22.64	100.2	0	29.67
8	342	2300	4.425	167.2	13.14	23.3	100.2	0	29.67
9	343	0	4.627	167.7	21.25	23.97	100.2	0	29.66
9	343	100	4.006	167.8	17.34	23.82	100.3	0	29.64
9	343	200	6.34	172.2	8.92	23.18	100.3	0	29.63
9	343	300	6.275	162.5	10.58	21.88	100.2	0	29.62
9	343	400	6.56	156.3	10.41	20.26	100.2	0	29.58
9	343	500	7.11	143.5	9.19	20	100.2	0	29.55
9	343	600	5.278	149.9	9.56	18.67	100.2	0	29.52
9	343	700	8.56	138.6	11.02	19.72	100.2	0	29.5
9	343	800	8.92	148.1	13.32	20.51	100.2	0	29.47
9	343	900	12.55	167	11.13	23.2	100.2	0	29.47
9	343	1000	12.47	165	12.13	26.6	98.2	0	29.46
9	343	1100	15.68	172.8	9.26	29.75	92	0	29.44
9	343	1200	14.77	171	10.35	31.08	89.1	0	29.39
9	343	1300	13	164.2	12.12	32.07	85.8	0	29.34
9	343	1400	17.39	171	10.12	33.03	83.4	0	29.29
9	343	1500	17.79	175.5	9.73	33.23	97.5	0.17	29.26
9	343	1600	15.36	179.3	9.24	32.58	100.3	0.7	29.24
9	343	1700	12.32	171.7	10.39	32.55	100.3	0.1	29.22
9	343	1800	12.36	180.2	9.19	33.11	100.3	0	29.23
9	343	1900	9.63	179.5	8.06	33.41	100.3	0	29.26
9	343	2000	9.88	188.6	7.94	34.25	100.3	0	29.28
9	343	2100	8.74	212.6	13.26	34.32	100.3	0	29.31
9	343	2200	6.413	259.4	19.89	34.34	100.3	0	29.36
9	343	2300	11.21	297.8	16.09	35.24	100.3	0	29.4
10	344	0	9.37	290.9	15.17	34.84	100.3	0	29.43
10	344	100	7.31	286.3	19.1	34.61	100.3	0	29.45
10	344	200	5.992	289.7	15.34	34.54	100.3	0	29.47
10	344	300	5.523	297.2	16.3	34.48	100.3	0	29.5
10	344	400	5.473	312.1	12.91	33.93	100.3	0	29.51
10	344	500	4.83	313.5	14.84	33.43	100.3	0	29.52
10	344	600	3.374	354.1	14.07	32.92	100.3	0	29.53
10	344	700	3.934	8.21	6.603	31.36	100.3	0	29.53

Day	DATE JD	TIME 24H	WS MPH	WD Deg	SIGMA Deg	AT DegF	RH %	RN inch	BP inHg
10	344	800	3.019	14.37	4.02	30.11	100.3	0	29.51
10	344	900	4.186	31.17	5.223	31.57	100.3	0	29.52
10	344	1000	4.12	53.89	4.765	33.7	100.3	0	29.52
10	344	1100	4.438	83.5	6.539	35.74	100.3	0	29.51
10	344	1200	6.017	124.1	14.37	35.18	100.3	0	29.48
10	344	1300	5.989	101.2	13.02	35.17	100.3	0	29.43
10	344	1400	6.798	89.3	9.61	34.79	100.3	0	29.38
10	344	1500	6.203	86.4	10.14	34.5	100.3	0	29.34
10	344	1600	5.356	87.4	7.93	33.96	100.3	0	29.29
10	344	1700	5.644	110.1	9.2	33.31	100.3	0	29.25
10	344	1800	6.228	117.8	10.62	32.39	100.3	0.03	29.2
10	344	1900	8.53	107.2	10.85	32.45	100.3	0.06	29.14
10	344	2000	9.61	126.9	11.21	33.29	100.3	0.08	29.08
10	344	2100	9.96	133	10.52	34.1	100.3	0	29.01
10	344	2200	11.23	147.2	10.76	35.24	100.3	0	28.94
10	344	2300	8.16	153.7	11.42	35.93	100.3	0	28.89
11	345	0	5.571	174.2	11.67	35.5	100.3	0.05	28.83
11	345	100	6.213	269.3	16.81	35.31	100.3	0.05	28.85
11	345	200	2.713	219.7	17.58	34.8	100.3	0	28.85
11	345	300	6.351	200.7	8.71	35.76	100.3	0	28.86
11	345	400	12.21	239.9	14.09	36.88	100.3	0.01	28.89
11	345	500	15.81	276.5	14.16	35.73	100.3	0	28.95
11	345	600	17.82	285.8	15.08	34.1	100.3	0	29
11	345	700	14.76	292.5	15.75	33.13	100.3	0	29.06
11	345	800	13.83	278.3	14.96	32.84	100.3	0	29.09
11	345	900	13.42	282.7	17.05	33.56	99.5	0	29.13
11	345	1000	13.2	285.1	16.73	35.12	93.7	0	29.17
11	345	1100	15.57	281.5	15.78	36.76	85.2	0	29.19
11	345	1200	18.66	277.5	14.91	36.86	82.3	0	29.2
11	345	1300	17.15	282.1	16.47	35.89	86.1	0	29.21
11	345	1400	17.54	294.4	16.81	32.81	92	0	29.24
11	345	1500	18.97	295.7	17.1	29.95	85.8	0	29.28
11	345	1600	19.52	295.7	16.53	28.61	74.1	0	29.33
11	345	1700	20.45	311.8	13.99	25.67	76	0	29.36
11	345	1800	17.78	309.8	15.56	23.75	73.1	0	29.39
11	345	1900	15.05	303.3	16.55	23.32	83.3	0	29.44
11	345	2000	15.23	311.3	15.11	22.41	92.3	0	29.47
11	345	2100	16.25	314.7	13.71	21.46	81.5	0	29.51
11	345	2200	12.18	312	15.58	20.3	85.3	0	29.54
11	345	2300	12.66	312.8	15.06	19.37	75.6	0	29.56
12	346	0	10.25	316.2	13.03	18.35	82.3	0	29.59
12	346	100	9.05	308.6	15.38	17.53	88.5	0	29.6
12	346	200	9.43	311.1	13.07	16.67	94.1	0	29.62
12	346	300	7.53	318.8	15.41	16.57	99.6	0	29.64
12	346	400	7.51	357.4	12.14	16.2	98.3	0	29.65
12	346	500	6.616	1.774	11.15	15.54	99.9	0	29.66
12	346	600	8.16	15.27	9.39	14.82	100.2	0	29.68
12	346	700	6.055	5.273	6.795	12.86	100.2	0	29.69
12	346	800	6.629	353.7	7.71	12.19	100.1	0	29.69
12	346	900	6.805	15.19	14.28	15.09	97.3	0	29.72
12	346	1000	5.775	49.51	14.02	17.79	88.4	0	29.76
12	346	1100	4.636	26.11	20.38	18.02	87.5	0	29.77
12	346	1200	2.892	54.17	10.98	18.69	85.9	0	29.76
12	346	1300	2.455	61.09	18.59	20.65	78.5	0	29.75
12	346	1400	3.335	182	42.81	22.44	73.2	0	29.74
12	346	1500	4.473	184.9	29.08	22.01	72.3	0	29.73
12	346	1600	2.171	154.4	24.17	20.36	73.7	0	29.72
12	346	1700	3.249	37.56	3.135	16.55	88.6	0	29.7

Day	DATE JD	TIME 24H	WS MPH	WD Deg	SIGMA Deg	AT DegF	RH %	RN inch	BP inHg
12	346	1800	5.288	45.97	3.097	15.82	93.6	0	29.68
12	346	1900	5.015	35.33	5.708	15.92	90.7	0	29.66
12	346	2000	5.02	50.85	6.255	15.87	90.6	0	29.66
12	346	2100	5.173	61.28	4.133	14.44	96.4	0	29.65
12	346	2200	5.555	74.7	4.395	13.95	100.2	0	29.64
12	346	2300	2.112	87.5	1.353	13.12	100.2	0	29.63
13	347	0	4.069	118.2	11.47	14.29	98.5	0	29.62
13	347	100	5.881	123.1	10.03	15.83	87.9	0	29.61
13	347	200	7.1	106.3	5.377	14.94	92	0	29.61
13	347	300	7.14	120	6.895	14.59	90.3	0	29.6
13	347	400	6.753	109.2	8.28	13.88	93.3	0	29.59
13	347	500	6.146	116.5	6.794	13.57	95.4	0	29.59
13	347	600	7.06	122.6	6.662	14.21	96.3	0	29.59
13	347	700	7.07	127.6	7.24	15.98	90.2	0	29.6
13	347	800	5.519	124.4	6.91	14.39	95.7	0	29.61
13	347	900	5.702	132.8	8.81	18.86	88.7	0	29.63
13	347	1000	6.258	152.2	13.08	23.73	84.6	0	29.67
13	347	1100	8.43	161.7	13.96	26.47	77	0	29.69
13	347	1200	10.18	179.3	10.84	28.16	78.4	0	29.67
13	347	1300	9.22	180.9	10.75	30.39	73.9	0	29.65
13	347	1400	8.19	177.8	17.66	32.24	72.3	0	29.64
13	347	1500	4.884	167.5	22.39	34.34	67.9	0	29.64
13	347	1600	3.229	133.7	14.47	35.46	67.93	0	29.65
13	347	1700	4.957	58.06	5.594	30.56	77.5	0	29.63
13	347	1800	5.816	40.6	10.38	26.27	89.8	0	29.62
13	347	1900	5.585	22.8	7.31	23.01	98.1	0	29.62
13	347	2000	6.524	21.47	7.73	21.45	99.3	0	29.63
13	347	2100	3.84	1.55	10.39	19.51	100.2	0	29.63
13	347	2200	1.805	77.2	16.16	18.08	100.2	0	29.62
13	347	2300	4.049	108.3	13.06	17.48	100.2	0	29.63
14	348	0	1.651	197	12.56	17.73	100.2	0	29.63
14	348	100	1.915	107.8	18.47	20.12	100.2	0	29.63
14	348	200	2.151	112.6	6.104	23.52	100.2	0	29.65
14	348	300	3.378	115.1	18.58	24.91	100.2	0	29.66
14	348	400	2.813	126.6	12.55	25.88	100.3	0	29.65
14	348	500	3.936	119.8	16.28	26.73	100.3	0	29.66
14	348	600	4.041	131.1	13.38	27.71	100.3	0	29.67
14	348	700	3.5	132.4	13.29	28.07	100.2	0	29.67
14	348	800	3.347	138.7	14.76	28.68	100.2	0	29.67
14	348	900	2.223	106.6	7.61	29.57	100.2	0	29.68
14	348	1000	1.943	98.9	10.52	30.8	100.3	0	29.7
14	348	1100	2.881	148.8	18.39	32.45	100.3	0	29.71
14	348	1200	0.904	34.54	7.54	33.84	99.9	0	29.71
14	348	1300	1.735	24.46	9.37	34.25	100	0	29.7
14	348	1400	4.701	3.158	11.06	33.12	100.3	0	29.69
14	348	1500	5.915	11.67	10.34	32.18	100.3	0	29.68
14	348	1600	5.427	17.53	10.98	31.03	100.3	0	29.69
14	348	1700	4.426	23.49	8.13	30.58	100.3	0	29.69
14	348	1800	4.206	23.34	8.65	30.48	100.3	0	29.69
14	348	1900	4.773	6.635	10.33	30.17	100.3	0	29.7
14	348	2000	4.692	5.259	8.64	30.03	100.3	0	29.71
14	348	2100	4.079	13.64	8.47	29.85	100.3	0	29.71
14	348	2200	2.046	0.243	9.17	29.84	100.3	0	29.7
14	348	2300	1.858	345.6	9.45	29.83	100.3	0	29.7
15	349	0	3.233	4.047	9.42	29.74	100.3	0	29.71
15	349	100	3.944	8.06	7.6	29.49	100.3	0	29.7
15	349	200	3.413	12.19	6.827	29.47	100.3	0	29.7
15	349	300	2.238	8.14	9.51	29.47	100.3	0	29.7

Day	DATE JD	TIME 24H	WS MPH	WD Deg	SIGMA Deg	AT DegF	RH %	RN inch	BP inHg
15	349	400	2.756	24.42	5.274	29.47	100.3	0	29.69
15	349	500	2.826	29.27	3.807	29.65	100.3	0	29.7
15	349	600	1.902	33.14	0.217	29.9	100.3	0	29.7
15	349	700	3.706	50.05	16.3	30.44	100.3	0	29.71
15	349	800	5.096	125.1	8.69	31.94	100.3	0	29.73
15	349	900	4.201	140.9	9.22	32.67	100.3	0	29.74
15	349	1000	4.651	175.4	12.59	34.22	97.6	0	29.75
15	349	1100	5.685	160.4	14.19	35.62	89.7	0	29.75
15	349	1200	5.285	172.8	15.97	36.65	88	0	29.75
15	349	1300	6.895	172.1	18.6	37.18	85.5	0	29.73
15	349	1400	5.284	121.1	23.61	41.32	76.1	0	29.73
15	349	1500	8.46	129.2	14.4	40.43	72.5	0	29.72
15	349	1600	7.44	125.3	11.55	38.99	75.5	0	29.7
15	349	1700	4.602	127.4	8.8	35.93 (4)	85.4	0	29.69
15	349	1800	5.316	108.3	4.93	30.91 (4)	100.3	0	29.68
15	349	1900	4.976 (1)	122.1	4.542	29.66	100.3	0	29.68
15	349	2000	4.943 (1)	143.1	7.92	29.97	99.2	0	29.68
15	349	2100	4.898 (1)	154.4	8.3	30.24	99.6	0	29.68
15	349	2200	5.945	152.3	7.37	30.63	100.2	0	29.67
15	349	2300	6.456	159.6	8.83	30.11	100.2	0	29.68
16	350	0	7.51	150.2	8.07	30.19	100.2	0	29.68
16	350	100	7.14	153.3	10.83	30.66	98.9	0	29.68
16	350	200	6.795	132.8	11.33	29.08	99.7	0	29.67
16	350	300	7.64	120.6	7.45	28.55	100.2	0	29.67
16	350	400	8	112.8	4.366	26.87	100.2	0	29.67
16	350	500	7.37	131.4	8.38	28.05	100.3	0	29.66
16	350	600	7.6	131.2	9.17	27.79	100.3	0	29.66
16	350	700	7.11	132.4	7.17	27.37	100.3	0	29.67
16	350	800	8.13	136.5	8.57	27.23	100.3	0	29.66
16	350	900	8.52	135.9	9.42	29.35	99.9	0	29.68
16	350	1000	13.55	173.5	10.88	33.11	98.5	0	29.71
16	350	1100	14.31	181.3	7.99	35	95.1	0	29.69
16	350	1200	16.57	180.3	8.62	36.81	93.9	0	29.67
16	350	1300	17.52	183.1	9.41	37.29	90.2	0	29.66
16	350	1400	15.08	173.4	11.68	37.13	89.8	0	29.64
16	350	1500	12.01	158	13.32	37.79	88.1	0	29.61
16	350	1600	12.35	156.8	13.16	36.44	90.7	0	29.58
16	350	1700	16.69	168.6	12.48	36.04	88.6	0	29.57
16	350	1800	13.53	167.5	11.69	35.48	87.8	0	29.55
16	350	1900	11.8	159.2	12.59	34.72	87.3	0	29.53
16	350	2000	11.37	142.3	10.43	33.7	90.3	0	29.5
16	350	2100	13.55	151.1	11.6	34.27	87.7	0	29.46
16	350	2200	13.8	163.1	12.77	36.07	86.3	0	29.45
16	350	2300	15.79	167	11.93	37.48	88.5	0	29.43
17	351	0	17.01	165.8	12.51	38.24	91.2	0	29.41
17	351	100	13.51	163.6	13.69	37.43	98.8	0.02	29.37
17	351	200	15.73	169.8	10.39	35.64	100.3	0.08	29.35
17	351	300	16.38	170.1	10.57	35.9	100.3	0.1	29.34
17	351	400	17.61	172.6	10.15	37.03	100.3	0	29.32
17	351	500	17.4	175.6	10.67	37.82	100.3	0	29.31
17	351	600	18.86	177.5	9.54	38.27	100.3	0	29.29
17	351	700	19.83	181.7	8.8	38.96	100.3	0	29.29
17	351	800	20.07	178.4	9.32	39.38	100.4	0	29.28
17	351	900	17.36	174.9	10.1	39.64	100.3	0	29.28
17	351	1000	16.94	171.6	10.24	39.73	100.3	0	29.29
17	351	1100	18.11	181.3	9.19	40.64	100.3	0	29.3
17	351	1200	19.92	182.5	7.8	40.77	100.3	0	29.29
17	351	1300	19.41	182.2	8.43	41.36	100.3	0	29.28

Day	DATE JD	TIME 24H	WS MPH	WD Deg	SIGMA Deg	AT DegF	RH %	RN inch	BP inHg
17	351	1400	13.31	194.5	10.18	41.11	100.3	0	29.28
17	351	1500	7.27	192.7	8.53	40.76	100.3	0	29.28
17	351	1600	6.151	213.9	12.48	40.62	100.3	0	29.28
17	351	1700	4.312	211.9	13.62	40.1	100.3	0	29.27
17	351	1800	4.023	229.5	14.26	39.8	100.3	0	29.28
17	351	1900	8.52	266.5	12.11	40.37	94.5	0	29.28
17	351	2000	6.805	257.2	13.3	40.12	92.6	0	29.28
17	351	2100	4.66	324.2	20.38	38.79	98.1	0	29.27
17	351	2200	3.998	24.82	6.333	36.87	100.3	0	29.26
17	351	2300	2.719	38.12	0.261	35.23	100.3	0	29.24
18	352	0	3.57	47.61	2.646	35.38	100.3	0	29.23
18	352	100	3.489	53.18	19.68	35.59	100.3	0	29.22
18	352	200	3.821	184.1	10.91	36.44	100.3	0	29.22
18	352	300	4.547	193.7	7.81	36.84	100.3	0	29.22
18	352	400	3.243	171.6	16.45	36.91	100.3	0	29.21
18	352	500	2.997	184.1	14.17	36.71	100.3	0	29.2
18	352	600	4.718	170.3	11.47	36.48	100.3	0	29.2
18	352	700	3.923	224.5	17.94	36.85	100.3	0	29.2
18	352	800	5.221	200.3	7.63	35.26	100.3	0	29.2
18	352	900	6.764	191.5	9.01	35.93	100.3	0	29.21
18	352	1000	6.949	176.7	8.8	37.83	100.3	0	29.23
18	352	1100	3.265	196.5	15.71	39.78	97.1	0	29.23
18	352	1200	4.525	286.6	27.76	41.73	92.9	0	29.23
18	352	1300	4.306	316.4	21.68	40.2	98.4	0	29.2
18	352	1400	6.16	323.3	15.71	39.99	99.7	0	29.19
18	352	1500	5.885	331	11.25	39.09	100.2	0	29.19
18	352	1600	4.271	315.8	13.81	37.89	100.3	0	29.2
18	352	1700	6.946	322.6	10.97	37.44	100.3	0	29.21
18	352	1800	6.928	333.5	10.11	36.84	100.3	0	29.22
18	352	1900	9.24	332	10.66	36.6	100.3	0	29.24
18	352	2000	7.36	330.2	12.21	36.35	100.3	0	29.26
18	352	2100	6.442	314.6	13.49	36.29	100.3	0	29.27
18	352	2200	7.1	317.2	13.12	36.1	100.3	0	29.27
18	352	2300	8.57	315.6	13.29	35.44	100.3	0	29.28
19	353	0	6.602	310.7	13.07	33.4	100.3	0.03	29.28
19	353	100	6.613	313.5	13.86	33.48	100.3	0.04	29.29
19	353	200	5.679	320.2	11.2	33.7	100.3	0	29.29
19	353	300	7.04	330.8	9.93	33.95	100.3	0	29.31
19	353	400	7.18	326.3	10.42	33.77	100.3	0	29.33
19	353	500	7.97	322.8	11.5	33.74	100.3	0	29.34
19	353	600	7.62	313.4	13.44	33.88	100.3	0	29.35
19	353	700	6.926	322.4	15.66	33.7	100.3	0	29.36
19	353	800	8.73	309	13.04	33.65	100.3	0	29.38
19	353	900	9.36	313.6	14.13	33.47	100.3	0	29.4
19	353	1000	10.47	311.8	12.98	33.04	100.3	0	29.43
19	353	1100	11.94	329.6	12.01	32.87	100.3	0	29.45
19	353	1200	10.76	340.2	11.25	32.69	100.3	0	29.44
19	353	1300	8.82	335.4	11.79	33	100.3	0	29.44
19	353	1400	6.223	345.8	14.43	33.15	100.3	0	29.44
19	353	1500	4.222	8.53	11.41	32.55	100.3	0	29.44
19	353	1600	2.479	1.565	13.53	32.3	100.3	0	29.44
19	353	1700	0.156	351.6	3.678	31.79	100.3	0	29.45
19	353	1800	1.781	109.2	15.15	31.34	100.3	0	29.46
19	353	1900	2.331	211.6	12.61	31.19	100.3	0	29.47
19	353	2000	3.948	275.8	11.79	31.89	100.3	0	29.48
19	353	2100	4.713	278.1	13.54	33.22	100.3	0	29.49
19	353	2200	6.597	273.4	12.51	33.82	100.3	0	29.5
19	353	2300	5.927	285.4	14.96	33.87	100.3	0	29.5

Day	DATE JD	TIME 24H	WS MPH	WD Deg	SIGMA Deg	AT DegF	RH %	RN inch	BP inHg
20	354	0	6.185	271.8	10.52	33.38	100.3	0	29.51
20	354	100	5.294	263.4	10.35	32.76	100.3	0	29.52
20	354	200	5.151	265.1	11.48	32.85	100.3	0	29.53
20	354	300	4.046	253.8	13.69	32.81	100.3	0	29.54
20	354	400	3.454	256.5	13.3	32.64	100.1	0	29.54
20	354	500	4.194	238	8.44	32.99	99.3	0	29.54
20	354	600	5.629	231.8	8.42	33.12	99.7	0	29.55
20	354	700	5.851	225.1	9.06	33.63	100.3	0	29.57
20	354	800	4.943	217.6	9.87	33.96	100.2	0	29.57
20	354	900	5.496	224.9	10.68	34.43	100.3	0	29.58
20	354	1000	4.919	206.5	16.78	35.27	100.1	0	29.58
20	354	1100	7.43	213.8	12.08	36.91	93.7	0	29.6
20	354	1200	7.2	208.1	14.37	37.97	91.2	0	29.6
20	354	1300	6.683	204.8	15.7	39.82	86.2	0	29.59
20	354	1400	8.98	186.1	12.64	40.87	85.8	0	29.58
20	354	1500	8.74	188.7	13.66	42.65	79.6	0	29.59
20	354	1600	8.04	215.8	11.87	42.65	75.5	0	29.59
20	354	1700	5.846	212.6	9.06	39.36	82.3	0	29.58
20	354	1800	5.431	187.9	7.4	36.47	92.2	0	29.56
20	354	1900	7.03	181.3	6.975	35.92	97.8	0	29.57
20	354	2000	9.02	188.7	7.58	36.2	100.3	0	29.59
20	354	2100	10.07	186.8	7.04	35.74	100.3	0	29.59
20	354	2200	9.47	184	7.35	35.17	100.3	0	29.59
20	354	2300	11.21	180.4	7.55	35.54	100.3	0	29.59
21	355	0	12.09	183.1	7.78	35.69	100.3	0	29.59
21	355	100	9.99	177.9	7.16	35.27	100.3	0	29.6
21	355	200	6.655	167.3	10.77	34.52	100.3	0	29.61
21	355	300	4.948	149.2	9.83	32.71	100.3	0	29.62
21	355	400	5.562	153	8.68	31.45	100.3	0	29.61
21	355	500	5.924	163.2	10.36	32.09	100.3	0	29.62
21	355	600	7.96	177.2	7.13	31.78	100.3	0	29.62
21	355	700	11.3	186.9	7.53	32.98	100.3	0	29.62
21	355	800	12.19	188	7.61	33.21	100.3	0	29.64
21	355	900	11.71	181.1	7.29	34.35	100.3	0	29.66
21	355	1000	12.28	179.9	7.79	36.49	99.8	0	29.69
21	355	1100	13.24	179.1	7.58	39.21	87.3	0	29.7
21	355	1200	13	180.9	7.54	42.71	74.8	0	29.69
21	355	1300	12.55	182.2	7.9	45.92	64.63	0	29.67
21	355	1400	9.06	185.3	7.73	50.19	50.09	0	29.67
21	355	1500	7.7	188.5	7.55	51.76	49.21	0	29.66
21	355	1600	7.36	183.4	7.29	50.83	54.88	0	29.65
21	355	1700	5.996	164.7	9.88	47.88	57.74	0	29.63
21	355	1800	6.44	170.6	7.45	45.27	59.6	0	29.61
21	355	1900	6.087	166.8	7.26	43.21	62.82	0	29.61
21	355	2000	5.938	164.3	7.98	42.19	63.08	0	29.6
21	355	2100	5.75	166.8	7.34	39.42	68.33	0	29.59
21	355	2200	6.664	171.5	6.271	38.52	75.8	0	29.58
21	355	2300	9.36	176.3	6.307	37.29	89.6	0	29.58
22	356	0	8.23	179.5	6.426	35.99	95.3	0	29.58
22	356	100	7.07	183.2	5.099	34.2	100.1	0	29.57
22	356	200	6.823	180.7	7.04	34.9	100.2	0	29.57
22	356	300	7.47	177.2	7.07	34.7	100.3	0	29.57
22	356	400	5.963	175.1	6.711	33.61	100.3	0	29.56
22	356	500	6.296	184.2	6.209	33.2	100.3	0	29.54
22	356	600	9.03	177.4	7.64	33.32	100.3	0	29.53
22	356	700	12.1	183.4	7.14	33.83	100.3	0	29.53
22	356	800	10.02	178.7	7.76	33.44	100.3	0	29.52
22	356	900	7.78	174.2	8.04	35.05	99.9	0	29.52

Day	DATE JD	TIME 24H	WS MPH	WD Deg	SIGMA Deg	AT DegF	RH %	RN inch	BP inHg
22	356	1000	8.99	180.7	8.23	38.11	93.4	0	29.55
22	356	1100	11.66	187.3	7.95	41.17	85.6	0	29.56
22	356	1200	8.99	189.2	9.06	45.36	73.2	0	29.54
22	356	1300	7.99	187.3	7.97	48.93	60.88	0	29.51
22	356	1400	3.909	203.6	23.71	53.37	48.28	0	29.49
22	356	1500	4.236	302.6	20.79	53.76	56.18	0	29.49
22	356	1600	5.079	34.37	17.51	52.51 (4)	60.03	0	29.47
22	356	1700	4.698	26.46	5.137	46.09 (4)	69.98	0	29.44
22	356	1800	4.231	25.77	5.554	38.45 (4)	88	0	29.41
22	356	1900	3.691	0.641	5.504	36.34	89.3	0	29.41
22	356	2000	3.855	356.5	10.05	35.67	87.3	0	29.4
22	356	2100	0.784	290.2	11.78	32.79	96.5	0	29.38
22	356	2200	2.332	177.4	10.66	30.79	100.3	0	29.37
22	356	2300	2.51	170.4	9.82	30.12	100.3	0	29.36
23	357	0	4.599	166.3	7.56	32.02	100.3	0	29.36
23	357	100	1.096	110.7	8.21	31.14	100.3	0	29.36
23	357	200	3.337	36.17	19.43	28.9	100.3	0	29.35
23	357	300	1.648	34.67	0.163	27.29	100.2	0	29.35
23	357	400	1.947	1.127	13.12	26.89	100.2	0	29.33
23	357	500	1.492	26.27	10.61	26.04	100.3	0	29.32
23	357	600	1.368	20.3	30.95	26.57	100.3	0	29.32
23	357	700	2.737	352.3	14.76	28.66	100.3	0	29.32
23	357	800	4.066	348.6	10.03	29.82	100.2	0	29.34
23	357	900	3.981	4.533	14.53	29.49	100.2	0	29.34
23	357	1000	4.542	349.7	11.57	31.74	100.3	0	29.35
23	357	1100	5.284	318.8	15.84	34.64	100.3	0	29.35
23	357	1200	8.4	345.4	11.27	36.33	100.3	0	29.34
23	357	1300	7.9	338.2	11.18	36.98	100.3	0	29.33
23	357	1400	6.296	313.9	16.71	39.36	100.3	0	29.31
23	357	1500	11.21	331.9	12.56	42.67	100.3	0	29.31
23	357	1600	12.09	341.3	10.53	40.06	100.4	0	29.31
23	357	1700	11	340.4	10.72	39.28	100.3	0	29.3
23	357	1800	12.19	348	10.55	39.31	100.3	0	29.31
23	357	1900	13.23	354.4	10.1	38.65	100.3	0	29.3
23	357	2000	12.03	348.8	10.02	37.69	100.3	0	29.29
23	357	2100	14.43	349.5	10.56	37.24	100.3	0	29.28
23	357	2200	14.85	352.9	11.38	36.58	100.3	0	29.29
23	357	2300	14.33	348.4	11.11	36.4	100.3	0	29.27
24	358	0	14.19	351	11.02	36.48	100.3	0	29.25
24	358	100	17.71	352.5	9.76	36.18	100.3	0	29.24
24	358	200	16.43	349.3	10.94	35.96	100.3	0	29.23
24	358	300	16.84	350.7	10.62	36.41	100.3	0	29.22
24	358	400	17.06	347.8	11.05	36.11	100.3	0	29.2
24	358	500	16.67	347.1	10.42	35.11	100.3	0	29.18
24	358	600	15.8	346.4	10.96	34.45	100.3	0	29.16
24	358	700	16.68	343.2	10.23	33.81	100.3	0	29.15
24	358	800	17.24	346.8	10.63	33.59	100.3	0	29.15
24	358	900	18.5	348.9	10.21	33.68	100.3	0	29.16
24	358	1000	19.3	348	10.01	33.61	100.3	0	29.17
24	358	1100	19.27	348.8	10.5	33.43	100.3	0	29.16
24	358	1200	18.73	346.4	10.89	33.36	100.3	0	29.13
24	358	1300	16.78	346.7	10.56	33.92	100.3	0	29.11
24	358	1400	16.64	346.9	10.64	33.93	100.3	0	29.1
24	358	1500	16.32	344.6	10.57	34.59	100.3	0	29.11
24	358	1600	15.73	343.4	10.37	35.59	100.3	0	29.11
24	358	1700	11.86	343	10.24	36.1	100.3	0	29.11
24	358	1800	13.06	344	9.87	35.98	100.3	0	29.12
24	358	1900	14.87	341.3	10.36	36	100.3	0	29.13

Day	DATE JD	TIME 24H	WS MPH	WD Deg	SIGMA Deg	AT DegF	RH %	RN inch	BP inHg
24	358	2000	15.75	347.2	10.13	36.45	100.3	0	29.12
24	358	2100	16.2	346.3	9.71	36.66	97.5	0	29.11
24	358	2200	13.53	340.2	10.32	36.61	96.7	0	29.11
24	358	2300	12.74	333.2	10.62	36.54	95.1	0	29.11
25	359	0	12.81	333.5	10.98	36.15	93.5	0	29.11
25	359	100	11.77	332.3	11.35	35.94	91.6	0	29.11
25	359	200	11.88	331.1	11.74	35.29	87.5	0	29.12
25	359	300	11.48	333.7	9.98	34.48	89.6	0	29.12
25	359	400	9.72	332.1	9.63	34.11	94	0	29.13
25	359	500	8.77	331.3	9.95	33.51	96.7	0	29.13
25	359	600	8.13	337.8	8.64	32.41	99.2	0	29.13
25	359	700	7.13	333.9	9.76	31.99	99.9	0	29.15
25	359	800	7.35	336.7	9.07	31.77	100.3	0	29.17
25	359	900	6.457	329	10.16	33.48	99.5	0	29.2
25	359	1000	7.15	321.9	12.29	34.2	99.5	0	29.23
25	359	1100	8.68	318.8	12.3	36.16	93.7	0	29.26
25	359	1200	10.44	326.8	13.08	38.03	87.1	0	29.27
25	359	1300	10.59	323.8	14.85	39.89	80.1	0	29.26
25	359	1400	10.09	329.1	13.45	41.91	75.1	0	29.26
25	359	1500	11.09	334.3	12.38	42.34	69.52	0	29.27
25	359	1600	10.76	333.3	10.08	42.12	68.17	0	29.29
25	359	1700	9.36	346.8	8.92	38.95	73	0	29.3
25	359	1800	7.25	347.5	8.22	35.32	79.4	0	29.29
25	359	1900	7.47	347.5	8.45	34.03	93.8	0	29.32
25	359	2000	4.845	334.3	7.87	32.08	99.8	0	29.32
25	359	2100	5.153	322.4	9.7	33.08	92.7	0	29.34
25	359	2200	6.589	336.5	7.56	32.35	98.9	0	29.36
25	359	2300	4.566	352	8.08	30.68	100.3	0	29.38
26	360	0	3.305	358.2	7.73	28.69	100.2	0	29.38
26	360	100	1.13	332.2	11.71	26.16	100.2	0	29.38
26	360	200	1.891	342.5	7.38	25.47	100.3	0	29.38
26	360	300	3.162	349	6.055	27.29	100.3	0	29.41
26	360	400	4.69	10.11	4.504	27.35	100.3	0	29.42
26	360	500	3.643	7.27	5.671	25.98	100.3	0	29.42
26	360	600	1.865	358.6	5.881	23.7	100.3	0	29.43
26	360	700	0.92	356.5	5.605	23.03	100.2	0	29.45
26	360	800	0.336	16.97	0.055	22.75	100.2	0	29.46
26	360	900	0.61	19.03	0.666	26.26 (4)	100.3	0	29.49
26	360	1000	1.473	22.12	0.179	33.3 (4)	100.3	0	29.54
26	360	1100	1.178	80.8	28.5	38.28	99.2	0	29.59
26	360	1200	2.121	48.9	14.17	39.03	96.4	0	29.56
26	360	1300	4.679	325.4	41	41.19	89.2	0	29.56
26	360	1400	3.798	309.9	33.95	42.6	83	0	29.55
26	360	1500	3.34	318	46.63	43.69	80.3	0	29.55
26	360	1600	5.016	10.41	27.32	41.78 (4)	84.8	0	29.54
26	360	1700	5.978	89.2	4.028	35.6 (4)	99.1	0	29.52
26	360	1800	5.835	95.6	3.724	29.87 (4)	100.3	0	29.51
26	360	1900	5.189	109.6	2.933	27.66	100.3	0	29.5
26	360	2000	1.826	23.71	17.62	26.25	100.2	0	29.51
26	360	2100	0.93	32.95	0.675	25.6	100.2	0	29.5
26	360	2200	3.706	42.66	1.191	26.82	100.3	0	29.5
26	360	2300	4.139	163.2	35.58	28.96	100.3	0	29.51
27	361	0	5.6	168	7.62	28.91	100.2	0	29.5
27	361	100	6.917	177.9	7.02	28.71	100.2	0	29.48
27	361	200	6.901	172.5	7.56	29.46	100.2	0	29.47
27	361	300	7.2	170.6	8.7	29.83	100.2	0	29.46
27	361	400	11.28	176.3	7.75	30.48	100.2	0	29.44
27	361	500	10.77	172.8	9.59	31.19	100.3	0	29.42

Day	DATE JD	TIME 24H	WS MPH	WD Deg	SIGMA Deg	AT DegF	RH %	RN inch	BP inHg
27	361	600	10.75	186.7	7.42	30.96	100.3	0	29.41
27	361	700	10.54	178.3	8.63	30.82	100.3	0	29.41
27	361	800	11.28	186.9	8.11	30.71	100.3	0	29.4
27	361	900	8.2	178.1	9.9	32.56	100.3	0	29.42
27	361	1000	8.32	175.4	8.65	35.12	100.1	0	29.45
27	361	1100	11.28	174.5	9.44	38.4	86.7	0	29.45
27	361	1200	13.58	178	8.65	42.27	77.2	0	29.42
27	361	1300	10.78	177.3	9.19	46.08	65.98	0	29.39
27	361	1400	8.59	181.5	9.08	48.11	58.95	0	29.36
27	361	1500	7.74	179.9	9.51	49.21	55	0	29.34
27	361	1600	7.99	179.1	7.45	47.04	62.6	0	29.32
27	361	1700	7.84	169.6	9.86	46.33	57.74	0	29.3
27	361	1800	6.251	164.2	12.05	44.73	59.73	0	29.29
27	361	1900	7.23	173.5	9.35	44.19	60.66	0	29.29
27	361	2000	8.72	174.7	7.96	42.81	63.14	0	29.28
27	361	2100	10.96	179.5	6.441	40.95	72.3	0	29.26
27	361	2200	10.2	181.5	8.51	40.79	72.3	0	29.25
27	361	2300	12.65	178.4	7.71	41.27	75.7	0	29.23
28	362	0	11.24	181.9	8.7	40.2	81.3	0	29.21
28	362	100	9.32	180.1	7.93	39.47	79.9	0	29.19
28	362	200	8.63	172.5	9.07	38.58	84.4	0	29.17
28	362	300	6.784	162.8	11.3	37.2	88.7	0	29.16
28	362	400	9.27	174.6	9.75	37.03	89.6	0	29.13
28	362	500	12.26	183.3	8.75	38.05	84.4	0	29.11
28	362	600	13.04	180.6	7.78	38.38	84.9	0	29.1
28	362	700	11.43	181.9	7.4	38.4	79.6	0	29.09
28	362	800	13	175.8	8.58	39.3	82.8	0	29.06
28	362	900	12.95	169.5	9.51	40.3	75.4	0	29.04
28	362	1000	8.89	204.3	13.9	41.94	66.16	0	29.06
28	362	1100	15.75	250.8	10.83	42.7	71.6	0	29.08
28	362	1200	13.32	237.6	12.39	41.85	79.5	0	29.07
28	362	1300	12.71	244.9	9.96	41.87	86.4	0	29.06
28	362	1400	13.36	239	10.52	41.56	93.9	0	29.05
28	362	1500	11.71	240.3	10.58	41.49	97.2	0	29.06
28	362	1600	12.34	247	11.21	41.84	96.9	0	29.07
28	362	1700	13.82	268.3	12.26	41.57	100.2	0	29.09
28	362	1800	13.17	277.1	15.45	41.97	98.8	0	29.11
28	362	1900	13.32	286.9	16.62	42.1	95.3	0	29.14
28	362	2000	12.44	286	16.79	41.44	96.2	0	29.15
28	362	2100	12.24	289.6	16.33	40.66	95.9	0	29.18
28	362	2200	14.35	293.6	15.92	39.7	97	0	29.19
28	362	2300	15.79	306.9	14.75	37.97	99.6	0	29.21
29	363	0	17.39	307.8	14.59	36.02	94.3	0	29.24
29	363	100	15.51	310.9	14.73	34.25	92.2	0	29.26
29	363	200	15.67	315.3	13.16	33.34	90.1	0	29.29
29	363	300	12.8	321.8	11.91	31.87	99.5	0	29.31
29	363	400	14.63	314.9	13.92	31.09	99.3	0	29.32
29	363	500	17.13	307.7	14.74	31.02	84.5	0	29.35
29	363	600	17.33	321.1	13.1	29.8	86	0	29.38
29	363	700	17.77	309	14.02	27.82	73.8	0	29.41
29	363	800	18.24	312.4	13.8	26.06	74.9	0	29.44
29	363	900	14.64	305.9	15.3	25.07	77	0	29.48
29	363	1000	15.12	311.2	14.17	24.65	77.1	0	29.52
29	363	1100	16.86	319.2	14.17	25.57	68.03	0	29.56
29	363	1200	16.93	318	14.13	25.6	66.47	0	29.57
29	363	1300	17.44	318.8	14.35	24.76	64.04	0	29.57
29	363	1400	16.16	323.6	14.51	23.69	62.76	0	29.58
29	363	1500	15.42	325.6	14.15	22.52	61.53	0	29.6

Day	DATE JD	TIME 24H	WS MPH	WD Deg	SIGMA Deg	AT DegF	RH %	RN inch	BP inHg
29	363	1600	14.23	331.3	12.48	21.07	64.34	0	29.61
29	363	1700	12.87	334	10.76	19.03	68.37	0	29.62
29	363	1800	12.22	339.3	10.83	17.56	73	0	29.63
29	363	1900	9.45	343.3	10.64	17.09	77.7	0	29.64
29	363	2000	9.53	331.5	10.05	17.37	82.5	0	29.65
29	363	2100	8.01	327.1	11.31	17	87.8	0	29.66
29	363	2200	6.753	341.6	10.93	15.93	89.1	0	29.67
29	363	2300	5.095	350.5	7.4	13.58	92.8	0	29.68
30	364	0	7.45	350.7	8.72	14.22	85.7	0	29.7
30	364	100	7.4	351.6	9.02	14.27	80.2	0	29.71
30	364	200	7.53	351.8	8.92	13.94	81.5	0	29.71
30	364	300	6.885	353.7	8.57	12.98	86.6	0	29.72
30	364	400	6.809	359.7	8.95	12.41	92.3	0	29.73
30	364	500	5.909	0.782	7.39	10.86	98.4	0	29.74
30	364	600	4.284	23.12	9.15	10.37	100.2	0	29.75
30	364	700	3.249	28.62	7.09	10	100.2	0	29.76
30	364	800	4.959	39.35	8.01	12.39	99.5	0	29.78
30	364	900	6.2	52.86	10.25	13.75	96.6	0	29.8
30	364	1000	4.833	53.96	13.5	15.76	91.6	0	29.8
30	364	1100	5.172	49.68	23.95	18.74	82.7	0	29.82
30	364	1200	4.472	30.63	35.81	21.05	76.4	0	29.81
30	364	1300	3.954	72.8	46.07	23.93	65.93	0	29.77
30	364	1400	3.138	72	42.9	25.26	59.5	0	29.76
30	364	1500	4.444	252.2	52.84	23.21	67.62	0	29.75
30	364	1600	2.798	266.2	22.42	21.15	71.6	0	29.73
30	364	1700	0.538	345.8	9.68	19.99	70.4	0	29.71
30	364	1800	3.073	44.88	10.01	16.64	93.5	0	29.7
30	364	1900	4.304	82.7	2.315	15.75	97.2	0	29.69
30	364	2000	4.718	86.2	3.654	16.44	95.3	0	29.69
30	364	2100	5.771	112.6	9.75	17.42	93.2	0	29.67
30	364	2200	5.624	136.9	10.55	18.61	85.5	0	29.65
30	364	2300	5.922	119	7.1	18.3	88.3	0	29.63
31	365	0	6.886	137.9	8.83	19.92	87.6	0	29.61
31	365	100	8.91	151.2	11.44	22.58	70.1	0	29.59
31	365	200	8.18	155	13.57	24.14	64.22	0	29.59
31	365	300	8.17	147.2	13.76	24.83	62.38	0	29.57
31	365	400	7.74	132.6	13.2	25.16	62.8	0	29.54
31	365	500	16.5	174.3	10.24	28.75	55.7	0	29.52
31	365	600	17.63	175.7	8.72	29.93	51.65	0	29.52
31	365	700	18.24	179.7	8.28	30.72	50.49	0	29.51
31	365	800	19.46	185	7.94	31.33	51.07	0	29.51
31	365	900	19.45	182.4	8.11	31.95	51.64	0	29.52
31	365	1000	17.65	178.5	8.71	32.97	48.04	0	29.52
31	365	1100	19.23	179.3	8.98	34.4	45.36	0	29.5
31	365	1200	18.22	180.3	8.92	36.32	43.78	0	29.49
31	365	1300	16.2	182	8.92	37.76	43.77	0	29.46
31	365	1400	15.44	178.5	10.1	39.61	42.52	0	29.43
31	365	1500	15.44	180.9	8.63	40.51	43.83	0	29.43
31	365	1600	14.14	180.3	8.84	40.08	46.73	0	29.42
31	365	1700	13.58	186.4	8.12	37.86	65.75	0	29.42
31	365	1800	10.14	170	9.74	34.8	86.7	0	29.41
31	365	1900	6.587	151.1	13.52	33	99.8	0.05	29.39
31	365	2000	6.075	166.3	11.43	32.57	100.3	0.1	29.37
31	365	2100	5.447	158.9	12.86	32.72	100.3	0.1	29.35
31	365	2200	7.38	169.4	11.01	33.66	100.3	0.06	29.33
31	365	2300	7.49	174.1	10.73	34.84	100.3	0.02	29.31
01-Jan	1	0	6.892	176.5	9.41	35.42	100.3	0	29.28
1	1	100	6.482	174.7	9.69	35.8	100.3	0	29.25

Day	DATE JD	TIME 24H	WS MPH	WD Deg	SIGMA Deg	AT DegF	RH %	RN inch	BP inHg
1	1	200	5.931	168.6	10.44	36.2	100.3	0	29.23
1	1	300	4.822	142.9	13.7	36.07	100.3	0.01	29.21
1	1	400	5.455	148.8	12.37	35.84	100.3	0	29.18
1	1	500	4.754	139.9	10.69	36.1	100.3	0	29.15
1	1	600	4.533	151.9	13.33	36.24	100.3	0	29.12
1	1	700	6.112	179.3	10.39	37.01	100.3	0	29.11
1	1	800	7.05	193.4	9.7	37.41	100.3	0.02	29.09
1	1	900	7.98	202.1	9.12	37.79	100.3	0.01	29.1
1	1	1000	6.96	209.1	9.69	38.48	100.3	0	29.11
1	1	1100	6.394	204.8	9.93	40.24	100.3	0	29.1
1	1	1200	6.311	190.9	9.41	41.49	100.3	0	29.09
1	1	1300	6.104	179.2	7.6	42.46	100.3	0	29.06
1	1	1400	4.966	234.4	18.71	43.58	100.3	0	29.05
1	1	1500	2.316	344.4	11.55	42.49	100.3	0	29.06
1	1	1600	5.355	322.5	15.55	41.99	100.3	0	29.07
1	1	1700	5.129	4.145	9.59	38.83	100.3	0	29.07
1	1	1800	3.561	294.1	39.34	38.24	100.3	0	29.07
1	1	1900	5.902	276.5	15.11	39.98	100.3	0	29.08
1	1	2000	3.563	245.3	16.62	39.04	100.3	0	29.08
1	1	2100	6.843	257.1	14.54	38.48	100.3	0	29.08
1	1	2200	9.95	254.7	10.37	38.24	100.2	0	29.07
1	1	2300	9.44	259.4	9.84	37.5	100.1	0	29.05
2	2	0	10.25	258.1	10.07	37	100	0	29.04
2	2	100	7	274.3	12.69	36.28	99.7	0	29.03
2	2	200	6.523	287.5	13.59	35.9	96.8	0	29.01
2	2	300	10.65	281.2	15.41	35.05	95.8	0	29.02
2	2	400	8.56	303.5	14.09	32.61	100.3	0	29.02
2	2	500	12.82	304.3	14.8	31.92	99.7	0	29.02
2	2	600	14.94	294.9	16.63	30.54	89.8	0	29.04
2	2	700	13.57	291.2	16.28	28.12	85.2	0	29.07
2	2	800	12.36	296.8	16.58	25.81	80.1	0	29.09
2	2	900	10.44	289.7	15.81	24.7	87.4	0	29.11
2	2	1000	9.68	284	15.04	24.24	98.8	0	29.14
2	2	1100	10.69	274.1	15.01	24.34	100.3	0	29.15
2	2	1200	11.61	260.5	11.48	25.73	99	0	29.14
2	2	1300	17.27	264.8	12.29	26.6	85.3	0	29.12
2	2	1400	18.14	258.5	11.13	26.39	88.4	0	29.12
2	2	1500	19.1	266	12.2	27.11	83.9	0	29.13
2	2	1600	19.35	265	11.61	27.12	84.2	0	29.16
2	2	1700	16.36	257.5	10.62	24.85	93	0	29.18
2	2	1800	15.37	255.4	10.03	23.74	98.3	0	29.2
2	2	1900	16.11	250.4	10.21	22.74	98.7	0	29.22
2	2	2000	16.69	254.8	11.05	22.7	86.8	0	29.25
2	2	2100	16.14	259.3	11.57	22.4	80.2	0	29.27
2	2	2200	14.25	260.8	12.28	22.1	80.7	0	29.28
2	2	2300	9.79	245.7	10.06	21.93	85	0	29.29
3	3	0	8.97	246	11.81	21.76	86.4	0	29.29
3	3	100	7.25	235	14.13	21.87	87	0	29.29
3	3	200	6.499	234.6	16.93	22.3	87.8	0	29.3
3	3	300	4.844	210	13.7	22.41	89.4	0	29.32
3	3	400	8.41	212.8	16.51	23.29	86.7	0	29.32
3	3	500	9.9	214.3	11.48	22.96	86.2	0	29.32
3	3	600	9.95	202.7	10.59	22.17	87	0	29.32
3	3	700	11.66	199.2	10.42	22.63	87.4	0	29.31
3	3	800	15.08	194.4	10	22.23	83.5	0	29.33
3	3	900	16.97	203.9	10.49	22.17	80.3	0	29.34
3	3	1000	19.5	196.1	10.11	21.83	83.2	0	29.35
3	3	1100	18.17	201.1	11.22	24.08	78.8	0	29.35

Day	DATE JD	TIME 24H	WS MPH	WD Deg	SIGMA Deg	AT DegF	RH %	RN inch	BP inHg
3	3	1200	15.8	202.9	11.94	25.99	74	0	29.34
3	3	1300	14.17	207.3	12.13	27.93	65.45	0	29.31
3	3	1400	13.98	214.5	12.71	29.63	57.9	0	29.29
3	3	1500	12.24	207.4	11.4	29.6	59.34	0	29.29
3	3	1600	11.89	219	11.75	29.69	58.03	0	29.28
3	3	1700	12.43	213	11.11	29.07	60.08	0	29.27
3	3	1800	12.93	193.6	10	28.03	65.61	0	29.27
3	3	1900	12.08	199.2	10.03	27.73	69.61	0	29.27
3	3	2000	13.49	203.7	10.29	27.32	76.7	0	29.26
3	3	2100	11.47	203.3	10.57	26.42	83	0	29.26
3	3	2200	10.1	205.3	10.43	26.05	86.8	0	29.25
3	3	2300	9.35	217.7	11.52	25.41	89.9	0	29.25
4	4	0	10.03	228.2	9.92	25.7	93.4	0	29.25
4	4	100	8.82	264.6	18.26	25.26	92.7	0	29.24
4	4	200	5.386	297.3	16.65	23.09	100	0	29.24
4	4	300	6.446	305	14.31	22.04	100.2	0	29.25
4	4	400	9.61	301.8	15.42	20.3	100.2	0	29.26
4	4	500	9.54	297.9	16.27	19.06	98.3	0	29.26
4	4	600	9.14	294.6	18.72	17.34	85	0	29.25
4	4	700	10.36	279.8	16.52	17.03	84.4	0	29.25
4	4	800	10.24	275.2	14.58	16.04	87.5	0	29.25
4	4	900	10.4	290	16.68	15.97	86.6	0	29.26
4	4	1000	10.42	287.2	16.02	16.73	84.8	0	29.26
4	4	1100	10.77	276.5	16.34	18.75	78.4	0	29.27
4	4	1200	11.92	282.5	17.14	17.67	81.4	0	29.24
4	4	1300	15.31	274.5	15.56	18.68	75.2	0	29.23
4	4	1400	16.82	274.6	15.28	18.26	71.5	0	29.24
4	4	1500	20.8	271.1	13.84	17	71.3	0	29.25
4	4	1600	22.85	266.4	13.32	15.69	67.02	0	29.26
4	4	1700	18.09	265.5	11.41	14.57	65.54	0	29.27
4	4	1800	17.59	259.3	11.02	13.35	74.1	0	29.29
4	4	1900	16.54	259.3	11.32	12.88	80.5	0	29.3
4	4	2000	15.24	258.4	11.27	12.52	82	0	29.32
4	4	2100	15.35	263.8	11.19	12.49	77.2	0	29.33
4	4	2200	14.88	263	11.36	12.23	69.11	0	29.34
4	4	2300	18.42	263.9	11.05	12.61	60.74	0	29.34
5	5	0	17.73	261.8	10.92	12.35	66.89	0	29.34
5	5	100	16.65	250.4	10.47	11.45	78.7	0	29.34
5	5	200	16.35	258.3	11.48	11.38	82.9	0	29.34
5	5	300	17.4	262.3	11.71	11.86	84.1	0	29.36
5	5	400	16.03	259.4	10.88	12.09	84.9	0	29.36
5	5	500	16.37	258.2	11.15	12.4	84.8	0	29.37
5	5	600	13.94	251	11.08	12.03	86.5	0	29.38
5	5	700	12.75	239	9.96	11.71	90.9	0	29.4
5	5	800	12.31	236	10.24	11.78	86.7	0	29.41
5	5	900	11.92	232.6	13.06	14.23	77.6	0	29.43
5	5	1000	14.59	239.6	12.3	16.9	70.7	0	29.45
5	5	1100	15.02	236.1	14.28	19.56	65.49	0	29.45
5	5	1200	17.1	246.1	12.46	21.41	61.98	0	29.43
5	5	1300	17.64	243.2	12.69	23.69	58.25	0	29.4
5	5	1400	18.58	247.4	12.92	24.3	57.26	0	29.37
5	5	1500	16.23	242	12.06	24.28	56.13	0	29.37
5	5	1600	14.98	223.3	14.65	23.19	54.46	0	29.37
5	5	1700	14.05	220.8	12.37	21.5	49.26	0	29.36
5	5	1800	12.88	201.7	10.32	20.14	49.86	0	29.34
5	5	1900	12.96	205.7	9.42	19.56	51.15	0	29.33
5	5	2000	11.02	207.7	10.06	19.1	53	0	29.33
5	5	2100	11.44	205.1	10.3	19.19	51.73	0	29.33

Day	DATE JD	TIME 24H	WS MPH	WD Deg	SIGMA Deg	AT DegF	RH %	RN inch	BP inHg
5	5	2200	12.85	200.5	10.61	18.99	52.13	0	29.31
5	5	2300	14.19	198.9	10.15	18.51	54.9	0	29.3
6	6	0	15.52	204.8	10.91	18.68	53.28	0	29.29
6	6	100	13.84	201.9	10.9	18.56	53.69	0	29.29
6	6	200	14.09	198.9	10.29	18.57	53.98	0	29.28
6	6	300	14.64	193.8	8.99	18.73	53.92	0	29.29
6	6	400	13.44	198.8	8.67	18.41	53.81	0	29.3
6	6	500	13.41	183	8.49	18.66	58.83	0	29.28
6	6	600	13.7	175	8.82	18.48	57.25	0	29.28
6	6	700	11.87	169.4	9.66	18.23	54.45	0	29.27
6	6	800	13.08	166.6	10.13	19.12	50.5	0	29.26
6	6	900	12.37	168.3	10.75	21.58	44.94	0	29.25
6	6	1000	17.05	178.4	8.6	23.96	47.81	0	29.24
6	6	1100	19.55	181	7.75	26.21	43.36	0	29.21
6	6	1200	18.19	182.4	9.22	28.26	44.82	0	29.17
6	6	1300	13.64	193.1	9.41	29.91	42.18	0	29.13
6	6	1400	10.12	163.3	11.44	30.84	34.55	0	29.11
6	6	1500	10.32	161.8	12.68	32.18	26.84	0	29.07
6	6	1600	14.58	178.7	8.98	34.02	32.89	0	29.07
6	6	1700	13.14	178.5	9.86	34.62	34.65	0	29.06
6	6	1800	14.96	177.7	9.35	33.99	33.45	0	29.04
6	6	1900	13.84	171.9	10.09	32.83	32.85	0	29.01
6	6	2000	15.85	172.2	10.61	32.69	35.21	0	28.99
6	6	2100	13.45	168.4	11.97	31.8	38.09	0	28.96
6	6	2200	16.01	174.6	11.37	28.83	74.6	0	28.94
6	6	2300	9.78	165.4	11.16	25.53	100.2	0.03	28.89
7	7	0	6.315	155.9	13.74	26.16	100.2	0.03	28.82
7	7	100	12.89	174.3	9.3	28.12	100.2	0	28.77
7	7	200	9.03	179.8	9.25	29.34	100.2	0.01	28.75
7	7	300	3.357	194	26.09	28.91	100.2	0.03	28.75
7	7	400	5.331	150.3	10.09	28.89	100.2	0	28.71
7	7	500	1.865	146.4	21.71	29.05	100.2	0	28.68
7	7	600	5.119	231.7	13.62	29.7	100.2	0	28.7
7	7	700	6.085	289.4	14.17	30.19	100.2	0	28.73
7	7	800	9.2	311.7	13.85	30.69	100.3	0	28.76
7	7	900	11.13	303.8	14.42	30.57	100.3	0	28.78
7	7	1000	10.75	297.5	15.36	30.77	100.3	0	28.82
7	7	1100	9.96	294.7	16.2	30.2	100.3	0	28.86
7	7	1200	9.8	282	15.96	30.2	100.3	0	28.87
7	7	1300	10.95	288.7	15.28	30.42	100.3	0	28.89
7	7	1400	10.75	314.6	14.04	30.98	100.3	0	28.92
7	7	1500	10.21	320.4	12.87	30.6	100.3	0	28.96
7	7	1600	9.38	314.4	13.04	29.84	100.3	0	29
7	7	1700	8.5	311.7	14.35	29.39	100.3	0	29.04
7	7	1800	9.52	305.5	14.52	28.33	100.2	0	29.07
7	7	1900	8.74	300.9	15.06	26.64	100	0	29.1
7	7	2000	8.81	299.9	16.01	25.44	100.2	0	29.12
7	7	2100	10	286.4	15.6	25.09	98.1	0	29.14
7	7	2200	10.22	292	16.14	24.08	96.1	0	29.17
7	7	2300	8.18	311.2	14.13	23.78	95.1	0	29.18
8	8	0	7.46	301	14.38	23.46	96.4	0	29.19
8	8	100	5.145	292	14.93	23.11	96.9	0	29.19
8	8	200	5.064	285.4	16.35	23.15	95.8	0	29.21
8	8	300	9.44	280.9	18.78	23.58	88.5	0	29.22
8	8	400	6.205	293.5	14.78	22.52	86.6	0	29.23
8	8	500	3.233	321.6	13.31	21.65	91.7	0	29.23
8	8	600	3.065	212.2	18.13	21.33	98.6	0	29.25
8	8	700	8	198.5	11.26	23.52	95.6	0	29.26

Day	DATE JD	TIME 24H	WS MPH	WD Deg	SIGMA Deg	AT DegF	RH %	RN inch	BP inHg
8	8	800	12.32	210.3	10.8	24.89	89.1	0	29.25
8	8	900	13.06	196.7	10.4	25.11	90.2	0	29.26
8	8	1000	12.44	196.5	10.94	26.65	82.8	0	29.26
8	8	1100	12.06	209.5	12.98	28.79	75.1	0	29.27
8	8	1200	14.52	228.9	12.16	29.42	69.76	0	29.26
8	8	1300	13.85	225.8	12.55	31.26	66.39	0	29.24
8	8	1400	11.71	234.8	12.5	30.31	68.73	0	29.22
8	8	1500	12.76	247.2	12.43	30.42	69.64	0	29.23
8	8	1600	12.72	238.6	10.99	30.67	71.1	0	29.25
8	8	1700	13.06	233.9	10.35	28.92	74.9	0	29.26
8	8	1800	13.38	226.2	10.19	28.26	76.1	0	29.28
8	8	1900	14.25	229.1	9.18	27.85	77.3	0	29.28
8	8	2000	13.54	230.4	8.79	27.61	78.8	0	29.29
8	8	2100	11.42	228.5	9.43	27.49	77.9	0	29.3
8	8	2200	12.67	237.4	9.33	27.76	78.4	0	29.29
8	8	2300	13.53	241	9	27.94	78.4	0	29.29
9	9	0	13.24	238.6	10.28	27.91	78.6	0	29.28
9	9	100	9.32	324.9	16.81	25.49	95.5	0	29.29
9	9	200	7.09	319.4	13.21	23.08	100.3	0	29.29
9	9	300	5.061	316.3	13.54	22.62	100.3	0	29.3
9	9	400	8.05	295.6	14.39	22.45	100.2	0	29.31
9	9	500	8.45	300.4	15.36	22.46	98.7	0	29.31
9	9	600	7.82	291.7	16.81	22.32	94.7	0	29.31
9	9	700	7.29	286.2	16.04	21.98	94.2	0	29.33
9	9	800	8.59	285.1	14.7	21.89	91.7	0	29.36
9	9	900	8.99	283.8	16.8	22.22	87.8	0	29.38
9	9	1000	10.83	274.8	14.09	23.06	84	0	29.4
9	9	1100	11.79	269.3	13.92	25.64	74.3	0	29.42
9	9	1200	14.54	262.8	12.48	27.21	68.94	0	29.42
9	9	1300	13.4	267.3	13.52	26.97	64.5	0	29.4
9	9	1400	11.35	274.6	16.39	26.31	62.38	0	29.4
9	9	1500	12.44	277	15.32	26.28	66.79	0	29.41
9	9	1600	9.54	281.2	15.22	24.26	79.3	0	29.43
9	9	1700	9.71	274.5	12.08	22.26	87	0	29.43
9	9	1800	9.75	269	11.15	21.02	90.6	0	29.44
9	9	1900	8.4	274.5	12.58	21.21	88.1	0	29.46
9	9	2000	8.99	273.1	13.02	20.18	86	0	29.48
9	9	2100	9.75	260.4	10.23	19.68	88.5	0	29.48
9	9	2200	7.34	256.4	10.64	18.99	91.2	0	29.49
9	9	2300	8.42	264.8	11.87	19.18	88.9	0	29.5
10	10	0	7.8	272.6	12.92	18.82	86.1	0	29.51
10	10	100	7.08	282.5	17.63	18.36	83	0	29.51
10	10	200	7.95	263.3	9.84	17.34	88	0	29.52
10	10	300	7.95	246.6	14.62	17.86	86.8	0	29.54
10	10	400	5.507	240.9	17.15	16.83	87	0	29.54
10	10	500	5.406	222.2	11.27	17.88	84.8	0	29.55
10	10	600	5.33	230.9	18.82	18.37	78	0	29.56
10	10	700	4.431	333.9	18.22	18.08	80.3	0	29.57
10	10	800	4.632	40.6	4.342	15.08	93.9	0	29.59
10	10	900	2.33	316.3	26.73	17.3	91.7	0	29.6
10	10	1000	6.604	320.9	16.35	21.55	86.3	0	29.64
10	10	1100	6.759	3.055	15.46	20.38	99.1	0	29.65
10	10	1200	8.22	20.34	13.59	20.27	95.7	0	29.64
10	10	1300	7.61	15.61	14.01	20	90.2	0	29.62
10	10	1400	7.1	18.43	13.6	19.95	90.7	0	29.62
10	10	1500	7.79	36.8	14.94	20.51	89.3	0	29.61
10	10	1600	7.91	27.2	11.37	19.41	92.8	0	29.61
10	10	1700	7.47	24.66	10.64	17.95	94.8	0	29.61

Day	DATE JD	TIME 24H	WS MPH	WD Deg	SIGMA Deg	AT DegF	RH %	RN inch	BP inHg
10	10	1800	6.399	25.25	10.28	16.76	93	0	29.61
10	10	1900	4.948	16.3	6.882	14.47	98	0	29.61
10	10	2000	6.173	5.127	6.829	12.03	100.2	0	29.61
10	10	2100	5.119	3.742	6.275	10.47	100.2	0	29.6
10	10	2200	3.958	355	7.75	8.54	100.1	0	29.6
10	10	2300	1.907	68.4	7.47	6.915	100.2	0	29.58
11	11	0	2.75	25.93	19.21	8.16	100.2	0	29.57
11	11	100	3.521	20.74	12	11.02	100.2	0	29.57
11	11	200	4.516	46.64	18.76	14.28	100.2	0	29.55
11	11	300	5.904	102.9	11.81	19.07	100.2	0	29.55
11	11	400	7.16	100.5	7.99	19.57	100.2	0	29.53
11	11	500	8.93	102.8	9	20.65	100.2	0	29.52
11	11	600	8.07	113.4	11.82	22.04	100	0	29.53
11	11	700	8.25	123.9	12.88	22.97	100.2	0	29.53
11	11	800	7.38	129.8	10.34	23.82	100.2	0	29.52
11	11	900	7.82	151.4	12.49	25.66	97.2	0	29.52
11	11	1000	14	167.7	11.97	27.67	91.1	0	29.52
11	11	1100	16.12	170.1	11.1	29.21	91	0	29.52
11	11	1200	15.99	172.4	10.48	30.78	92	0	29.5
11	11	1300	14.35	170.1	11.45	31.93	92.6	0	29.47
11	11	1400	13.92	169.1	11.49	33.57	91.8	0	29.45
11	11	1500	14.93	171.8	10.64	34.14	93.7	0	29.45
11	11	1600	13.16	169.9	11.19	34.1	97.5	0	29.43
11	11	1700	15.9	170.6	10.41	33.69	100.3	0	29.43
11	11	1800	15.98	171.9	11.13	33.49	100.3	0	29.43
11	11	1900	16.36	173.9	9.63	33.8	100.3	0	29.44
11	11	2000	13.91	170.7	10.52	34.26	100.3	0	29.43
11	11	2100	15.66	171.3	9.78	34.98	100.3	0	29.42
11	11	2200	15.9	175	9.26	35.42	100.3	0	29.41
11	11	2300	17.48	173.6	10.2	35.7	100.3	0	29.4
12	12	0	15.72	170.3	10.89	35.43	100.3	0.13	29.37
12	12	100	15.31	169.9	9.91	35.79	100.3	0.14	29.34
12	12	200	15.69	171.4	9.59	36.69	100.3	0.03	29.33
12	12	300	13.49	169.7	10.38	37.41	100.3	0.02	29.33
12	12	400	13.61	172.4	10.13	37.93	100.3	0	29.32
12	12	500	14.86	174.9	9.15	38.52	100.3	0.1	29.3
12	12	600	14.37	171.5	9.29	39.51	100.3	0.02	29.29
12	12	700	12.97	173.8	10.44	39.85	100.3	0	29.28
12	12	800	13.79	180.5	8.51	40.08	100.3	0	29.28
12	12	900	15.28	184.1	8.51	40.55	100.3	0.13	29.27
12	12	1000	13.54	179.1	8.06	40.75	100.3	0.05	29.27
12	12	1100	13.46	185.7	8.83	42.24	100.3	0	29.27
12	12	1200	14.29	178.6	8.67	43.17	100.3	0	29.24
12	12	1300	16.85	188.6	8.44	43.01	100.3	0.28	29.2
12	12	1400	18.63	189.1	8.23	44.14	100.3	0.16	29.19
12	12	1500	17.94	184.1	7.23	44.63	100.4	0.45	29.18
12	12	1600	13.67	180.2	7.51	44.2	100.4	0	29.17
12	12	1700	14.91	181.5	8.19	43.41	100.4	0.06	29.17
12	12	1800	14.99	181.3	7.66	43.72	100.3	0.01	29.17
12	12	1900	17.27	186.3	7.84	43.92	100.3	0.84	29.18
12	12	2000	16.67	183.4	7.99	44.47	100.3	0.17	29.18
12	12	2100	16.89	180.1	7.98	45.43	100.4	0.46	29.19
12	12	2200	17.94	184.3	7.54	45.81	100.4	0.33	29.19
12	12	2300	17.56	184.6	7.52	45.93	100.4	0.23	29.2
13	13	0	17.66	184.3	7.51	46.25	100.4	0.23	29.2
13	13	100	14.6	188.3	7.91	46.25	100.4	0.02	29.2
13	13	200	13.64	189.8	8.27	46.29	100.4	0	29.22
13	13	300	13.86	189.6	7.68	46.65	100.4	0	29.24

Day	DATE JD	TIME 24H	WS MPH	WD Deg	SIGMA Deg	AT DegF	RH %	RN inch	BP inHg
13	13	400	12.91	189.7	7.79	47.58	100.4	0	29.25
13	13	500	11.98	191.6	8.5	48.49	100.3	0	29.26
13	13	600	11.19	192.7	7.9	48.6	100.3	0	29.27
13	13	700	10.26	184.2	6.231	47.91	100.3	0	29.29
13	13	800	10.66	180.6	6.493	48.72	100.3	0	29.31
13	13	900	11.15	180.2	6.58	50	100.3	0	29.33
13	13	1000	9.43	179.4	9.44	52.95	100.3	0	29.35
13	13	1100	10.28 (1)	175.7	9.23	55.66	100.3	0	29.37
13	13	1200	10.27 (1)	177.8	8.77	59.33	100.3	0	29.38
13	13	1300	10.22 (1)	179.6	8.73	61.64	98.7	0	29.36
13	13	1400	10.95	187.5	8.07	62.97	95.3	0	29.37
13	13	1500	8.78	184.9	7.99	62.85	93.8	0	29.38
13	13	1600	8.51	182.3	7.12	62.9	91.2	0	29.39
13	13	1700	5.516	187.2	9.45	58.27	99.3	0	29.39
13	13	1800	6.486	151.2	10.42	56.77	100.3	0	29.38
13	13	1900	6.524	153.8	12.37	55.58	100.3	0	29.38
13	13	2000	7.58	167.2	9.7	53.93	100.3	0	29.38
13	13	2100	9.04	169.5	9.28	52.12	100.3	0	29.39
13	13	2200	8.63	183.9	11.21	51.45	100.3	0	29.4
13	13	2300	13.93	178.1	7.4	50.63	100.3	0	29.4
14	14	0	13.03	172	9.11	50.72	100.3	0	29.38
14	14	100	15.01	174.4	8.88	50.47	100.3	0	29.38
14	14	200	11.44	174.5	10.29	50.08	100.3	0	29.37
14	14	300	9.4	175	9.56	48.88	100.3	0	29.38
14	14	400	9.43	178.8	8.78	48.36	100.3	0	29.39
14	14	500	11.67	175.6	7.86	47.22	100.3	0	29.38
14	14	600	10.94	172.7	8.48	48.27	100.4	0	29.39
14	14	700	9.58	165.8	8.87	48.07	100.4	0	29.39
14	14	800	8.95	156.4	11.13	48.58	100.4	0	29.38
14	14	900	9.98	162	11.53	50.68	100.3	0	29.39
14	14	1000	13.75	166.6	10.36	53.45	100.3	0	29.41
14	14	1100	13.27	178.3	8.36	55.57	100.3	0	29.41
14	14	1200	16.84	172	8.86	58.1	100.3	0	29.38
14	14	1300	18.4	173.1	8.07	59.32	100.3	0	29.34
14	14	1400	17.77	171.8	9.78	60.82	100.3	0	29.34
14	14	1500	16.18	168.6	11.54	62.45	97.5	0	29.33
14	14	1600	13.26	167.3	12.7	63.32	93.8	0	29.32
14	14	1700	14.07	167.9	12.77	62.95	93.3	0	29.3
14	14	1800	11.49	152	11.41	61.78	96.7	0	29.28
14	14	1900	12.41	159.8	10.73	61.21	97.3	0	29.27
14	14	2000	14.85	157.8	11.94	62.89	92.6	0	29.26
14	14	2100	19.47	172.2	10.83	63.09	91.3	0	29.25
14	14	2200	16.02	163.6	12.8	63.22	91.7	0	29.25
14	14	2300	15.49	156.3	13.47	62.59	95.6	0	29.23
15	15	0	19.88	169.6	11.68	63.2	93.9	0	29.23
15	15	100	18.15	167.4	11.57	63.22	96.4	0	29.21
15	15	200	17.44	176.1	9.15	61.7	99.9	0	29.2
15	15	300	17.39	167.9	11.53	62.68	100.3	0	29.19
15	15	400	15.84	169.5	10.97	62.64	100.4	0	29.17
15	15	500	11.83	174.8	8.55	59.63	100.3	0	29.15
15	15	600	16.75	166.1	12.19	62.69	100.3	0	29.13
15	15	700	16.44	168.6	11.47	63.34	99.5	0	29.13
15	15	800	14.2	168.1	11.94	63.62	97.3	0	29.14
15	15	900	12.8	158.3	12.81	63.56	99.2	0	29.14
15	15	1000	11.8	162.4	13	63.28	100.4	0	29.14
15	15	1100	12.76	179.2	9.6	62.02	100.4	0	29.12
15	15	1200	15.95	168.3	13.77	65.55	99.4	0	29.09
15	15	1300	12.34	174.7	9.91	62.21	100.3	0	29.07

Day	DATE JD	TIME 24H	WS MPH	WD Deg	SIGMA Deg	AT DegF	RH %	RN inch	BP inHg
15	15	1400	15.18	168.7	11.62	65.27	99.1	0	29.04
15	15	1500	9.75	189.7	14.58	61.96	100.3	0	29.05
15	15	1600	9.94	176.8	12.29	61.87	100.4	0	29.04
15	15	1700	11.85	168.8	10.79	61.87	100.4	0.01	29.05
15	15	1800	6.366	154.4	11.7	60.09	100.3	0.15	29.04
15	15	1900	4.434	156.3	11.78	58.85	100.3	0.08	29.03
15	15	2000	3.532	140.8	16.36	57.81	100.3	0.06	29.01
15	15	2100	3.057	315.8	32.82	57.81	100.3	0.11	28.99
15	15	2200	6.676	83.6	21.83	57.83	100.3	0.01	28.96
15	15	2300	4.434	348.1	21.95	53.37	100.3	0	28.99
16	16	0	6.29	4.865	10.6	49.03	100.3	0	28.97
16	16	100	7.64	1.593	12.01	46.12	100.3	0	28.97
16	16	200	6.941	9.58	8.47	44.21	100.3	0	28.96
16	16	300	4.438	4.984	12.77	44.2	100.4	0	28.96
16	16	400	4.862	346.9	19.96	43.96	100.4	0	28.95
16	16	500	3.666	7.49	34.58	43.69	100.4	0	28.96
16	16	600	3.782	335.3	12.95	43.12	100.4	0	28.96
16	16	700	7.18	323.8	11.41	42.91	100.4	0	29
16	16	800	5.241	355.1	10.85	43.01	100.4	0	29.04
16	16	900	5.229	3.353	11.47	43.64	100.4	0.02	29.06
16	16	1000	5.593	349.6	8.78	44.04	100.4	0.01	29.1
16	16	1100	7.74	327.1	12.08	43.61	100.4	0	29.13
16	16	1200	8.59	332.1	11.58	42.2	100.4	0.02	29.15
16	16	1300	9.26	319.6	12.89	41.35	100.3	0	29.14
16	16	1400	8.8	331.8	10.81	41.47	100.3	0	29.15
16	16	1500	7.64	330.4	11.3	40.54	100.3	0	29.17
16	16	1600	7.18	325.5	12.75	40.01	100.3	0.01	29.18
16	16	1700	6.893	336.5	11.9	38.95	100.3	0	29.2
16	16	1800	6.557	318.5	13.14	38.14	100.3	0	29.22
16	16	1900	7.13	293.8	15.51	38.09	100.3	0	29.25
16	16	2000	8.4	293.7	15.37	37.38	100.3	0	29.26
16	16	2100	8.86	298.2	15.69	36.66	100.3	0	29.27
16	16	2200	7.48	310.5	14.17	36.24	100.3	0	29.29
16	16	2300	7.85	306.5	13.97	35.76	100.3	0	29.3
17	17	0	7.72	298.2	14.97	35.31	100.3	0	29.31
17	17	100	6.299	305.5	15.36	35.11	100.3	0	29.32
17	17	200	7.95	311.3	12.84	35.48	100.3	0	29.31
17	17	300	7.96	327.9	10.96	35.19	100.3	0	29.33
17	17	400	8.7	336.3	11.14	34.59	100.3	0	29.34
17	17	500	8.71	338.3	11.2	34.24	100.3	0	29.34
17	17	600	7.14	342.2	12.82	33.78	100.3	0	29.35
17	17	700	7.61	330.9	12.39	33.51	100.3	0	29.37
17	17	800	8.28	332.1	12.03	33.06	100.3	0	29.39
17	17	900	7.44	328.7	11.53	32.74	100.3	0	29.41
17	17	1000	7.52	333.7	12.91	32.78	100.3	0	29.43
17	17	1100	7.17	329.8	12.87	33.06	100.3	0	29.46
17	17	1200	7.19	337.3	12.9	34.42	100.3	0	29.46
17	17	1300	7.01	341.6	13.94	35.21	100.3	0	29.44
17	17	1400	6.785	329.9	15.98	35.24	100.3	0	29.44
17	17	1500	6.594	325.2	16.91	34.69	100.3	0	29.44
17	17	1600	5.594	350.3	16.84	34.52	100.3	0	29.45
17	17	1700	4.928	7.01	13.32	33.56	100.3	0	29.46
17	17	1800	5.01	19.82	14.36	32.95	100.3	0	29.47
17	17	1900	4.562	39.55	16.77	32.36	100.3	0	29.47
17	17	2000	5.4	59.98	13.9	31.57	100.3	0	29.47
17	17	2100	2.591	57.05	7.61	31.22	100.3	0	29.46
17	17	2200	2.883	99.1	12.68	31.33	100.3	0	29.47
17	17	2300	3.016	101.9	23.12	31.17	100.3	0	29.46

Day	DATE JD	TIME 24H	WS MPH	WD Deg	SIGMA Deg	AT DegF	RH %	RN inch	BP inHg
18	18	0	2.233	252.2	26.36	31.24	100.3	0	29.46
18	18	100	3.137	112.8	34.02	31.46	100.3	0	29.46
18	18	200	4.569	113.4	15.04	31.71	100.3	0	29.46
18	18	300	4.822	101.3	11.71	31.97	100.3	0	29.47
18	18	400	5.186	161.5	16.41	32.17	100.3	0	29.47
18	18	500	5.622	159.1	14.46	32.33	100.3	0	29.46
18	18	600	5.571	157.9	13.94	32.46	100.3	0	29.47
18	18	700	6.812	136.4	10.96	32.82	100.3	0	29.48
18	18	800	5.167	154.1	11.32	33.32	100.3	0	29.48
18	18	900	6.343	165.6	12.1	34.39	100.3	0	29.49
18	18	1000	7.36	155.2	12.66	36.14	100.3	0	29.5
18	18	1100	8.86	175.8	15.37	38.45	100.3	0	29.5
18	18	1200	12.07	175.4	10.9	40.28	100.3	0	29.48
18	18	1300	11.26	172.5	10.39	41.69	100.3	0	29.46
18	18	1400	11.44	173.2	9.66	43.6	100.4	0	29.45
18	18	1500	10.26	175.4	9.18	44.97	100.4	0	29.47
18	18	1600	7.4	172.8	8.89	45.41	100.4	0	29.48
18	18	1700	6.927	164.4	12.09	45.52	100.4	0	29.46
18	18	1800	8.5	178.9	7.28	43.64	100.4	0	29.45
18	18	1900	8.81	175.6	9.22	43.37	100.4	0	29.44
18	18	2000	8.43	174.4	9.69	42.62	100.3	0	29.43
18	18	2100	12.26	173.7	9.17	43.26	100.3	0	29.42
18	18	2200	13.22	175	8.79	43.31	100.3	0	29.42
18	18	2300	11.84	178.1	7.86	42.85	100.3	0	29.42
19	19	0	11.45	181.5	8.11	43.06	100.3	0	29.41
19	19	100	10.82	179.8	8.93	42.93	100.3	0	29.4
19	19	200	10.25	172.2	9.42	43.07	100.3	0	29.38
19	19	300	12.03	175.6	8.62	43.29	100.3	0	29.38
19	19	400	13.72	178.4	8.22	43.23	100.3	0	29.37
19	19	500	13.31	174.3	9.51	43.33	100.3	0	29.35
19	19	600	12.42	167.6	11.81	43.17	100.3	0	29.32
19	19	700	12.42	166.3	11.99	42.65	100.3	0	29.31
19	19	800	14.46	168.2	11.07	42.22	100.3	0	29.3
19	19	900	15.7	170.1	10.89	42.24	100.3	0	29.3
19	19	1000	15.24	169.2	11.3	42.58	100.3	0	29.3
19	19	1100	14.93	167.4	12.21	43.22	100.3	0	29.28
19	19	1200	16.16	173.4	10.21	44.19	100.4	0	29.24
19	19	1300	16.65	172.1	10.8	45.05	100.4	0	29.22
19	19	1400	15.16	168.1	11.32	45.6	100.4	0	29.2
19	19	1500	14.86	168.2	11.44	45.72	100.3	0	29.19
19	19	1600	13.86	165.8	11.69	45.62	100.4	0	29.18
19	19	1700	14.6	174.2	10.26	45.21	100.4	0	29.15
19	19	1800	12.86	171	10.34	44.58	100.4	0	29.13
19	19	1900	11.51	177.7	9.24	44.45	100.4	0	29.12
19	19	2000	9.54	170.5	11.75	43.96	100.4	0	29.1
19	19	2100	9.13	170.3	11.37	44.45	100.4	0	29.08
19	19	2200	7.14	175.3	10.02	43.24	100.4	0	29.04
19	19	2300	12.42	184.1	8.5	44	100.4	0	29.04
20	20	0	11.19	168.6	11.44	45.34	100.4	0	29.01
20	20	100	11.45	169.9	10.55	45.26	100.4	0	28.98
20	20	200	11.71	164.3	15.7	45.1	100.4	0	28.95
20	20	300	3.544	124.3	23.94	43.53	100.4	0	28.91
20	20	400	7.67	131.2	15.46	44.65	100.4	0	28.88
20	20	500	11.05	121.9	13.58	44.58	100.4	0	28.84
20	20	600	5.515	107.8	17.17	43.74	100.4	0	28.79
20	20	700	3.42	114.9	30.79	44.04	100.4	0	28.8
20	20	800	7.24	27.53	8.88	43.86	100.4	0.07	28.78
20	20	900	10.77	25.36	10.23	43	100.4	0.04	28.72

Day	DATE JD	TIME 24H	WS MPH	WD Deg	SIGMA Deg	AT DegF	RH %	RN inch	BP inHg
20	20	1000	9.97	92.8	45.78	42.04	100.3	0.18	28.7
20	20	1100	5.884	48.11	12.07	43.34	100.3	0.03	28.68
20	20	1200	7.05	66.48	9.8	44.14	100.4	0.21	28.65
20	20	1300	8.27	70.8	9.22	45.06	100.4	0.08	28.59
20	20	1400	5.984	78.6	10.91	45.63	100.4	0	28.55
20	20	1500	3.107	72.7	16.25	45.62	100.4	0.03	28.54
20	20	1600	3.969	338.3	10.89	45.68	100.4	0	28.53
20	20	1700	4.373	13.53	13.83	45.22	100.4	0	28.53
20	20	1800	4.044	38	9.35	43.85	100.4	0.01	28.53
20	20	1900	4.47	352.8	8.23	43	100.4	0.03	28.53
20	20	2000	5.246	358.8	8.01	42.59	100.3	0.02	28.52
20	20	2100	5.78	6.655	8.7	42.25	100.3	0.03	28.51
20	20	2200	5.708	17.37	8.19	42.36	100.3	0.04	28.51
20	20	2300	5.285	13.44	7.04	42.35	100.3	0	28.51
21	21	0	5.095	13.49	6.337	42.32	100.3	0.03	28.5
21	21	100	4.912	345	9.21	42.15	100.3	0.04	28.49
21	21	200	8.65	303.8	14.92	40.66	100.3	0.1	28.5
21	21	300	8.96	301.1	16.8	38.69	100.3	0	28.51
21	21	400	6.859	287.7	16.55	37.94	100.3	0.05	28.53
21	21	500	5.074	266.4	15.01	37.68	100.3	0.01	28.53
21	21	600	4.768	283.6	18.04	37.71	100.3	0.02	28.54
21	21	700	4.911	253	10.13	37.48	100.3	0.01	28.55
21	21	800	6.153	246	9.2	37.44	100.3	0.02	28.56
21	21	900	7.52	239.2	10.96	37.25	100.3	0.01	28.57
21	21	1000	5.564	222.4	10.78	37.28	100.3	0	28.59
21	21	1100	5.543	262.2	13.38	37.68	100.3	0	28.61
21	21	1200	6.79	271	14.97	37.56	100.3	0	28.61
21	21	1300	6.741	269.9	16.8	37.6	100.3	0.06	28.61
21	21	1400	6.238	243.2	12.89	37.07	100.3	0.04	28.61
21	21	1500	9.09	236.6	11.37	37.48	100.3	0	28.62
21	21	1600	9.19	223.7	10.16	36.65	100.3	0.03	28.64
21	21	1700	8.67	203.1	10.75	35.34	100.3	0	28.65
21	21	1800	8.1	205.2	9.49	34.42	100.3	0.04	28.67
21	21	1900	7.47	202.4	10.09	33.94	100.3	0.01	28.69
21	21	2000	9.1	215.4	10.47	34.78	100.3	0	28.71
21	21	2100	9.88	217.4	12.12	34.53	100.3	0	28.73
21	21	2200	10.7	219.6	11.71	34.02	100.3	0	28.74
21	21	2300	9.75	218.5	12.34	33.66	100.2	0	28.76
22	22	0	12.72	234.6	10.74	33.43	98	0	28.77
22	22	100	12.03	233.4	11.52	32.96	94.8	0	28.78
22	22	200	10.34	228.8	11.23	32.55	95.3	0	28.79
22	22	300	10.52	226.3	11.23	32.07	93.9	0	28.8
22	22	400	9.64	218.9	11.38	31.64	93.2	0	28.82
22	22	500	9.6	219.2	11.56	30.98	95.3	0	28.83
22	22	600	8.98	219.7	11.39	29.48	100.3	0	28.85
22	22	700	8.24	206.2	10.81	29	100.2	0	28.86
22	22	800	9.94	215.3	11.56	29.2	98	0	28.87
22	22	900	9.42	222.9	10.82	29.04	95.5	0	28.9
22	22	1000	10.07	224.8	12.06	30.21	88.5	0	28.93
22	22	1100	8.76	224	12.74	31.19	85.2	0	28.94
22	22	1200	9.03	219.5	15.19	31.63	84.5	0	28.94
22	22	1300	8.71	219.9	15.52	32.21	82.7	0	28.93
22	22	1400	9.32	226.1	12.04	32.54	81.4	0	28.92
22	22	1500	10.32	227.6	13.04	31.66	82.2	0	28.92
22	22	1600	9.99	231.1	12.35	30.88	81.6	0	28.93
22	22	1700	11.78	232.8	10.22	29.41	88.8	0	28.96
22	22	1800	8.99	230.6	10.32	27.21	100.2	0	28.97
22	22	1900	6.025	215.5	10.61	26.64	100.2	0	28.99

Day	DATE JD	TIME 24H	WS MPH	WD Deg	SIGMA Deg	AT DegF	RH %	RN inch	BP inHg
22	22	2000	6.793	217.8	10.57	26.55	100.2	0	29
22	22	2100	7.11	237.1	9.22	26.44	100.2	0	29
22	22	2200	7.09	235.8	9.15	25.96	100.2	0	29.01
22	22	2300	7.62	230.1	9.74	25.4	100.3	0	29.01
23	23	0	8.08	225.5	11.02	25.42	99.5	0	29.01
23	23	100	7.28	216.6	10.03	24.78	99	0	29
23	23	200	7.41	218.7	11.16	24.9	97.7	0	29
23	23	300	6.303	208.9	9.05	24.88	95.8	0	29.02
23	23	400	6.192	215.5	9.98	25.25	94.5	0	29.03
23	23	500	6.192	219.2	9.92	25.46	94.8	0	29.03
23	23	600	6.352	222.9	9.24	25.07	96.9	0	29.04
23	23	700	6.648	221.2	9.12	24.5	99.4	0	29.04
23	23	800	6.655	217.3	9.61	24.64	100.1	0	29.06
23	23	900	7.38	205.8	9.95	26.38	97.3	0	29.08
23	23	1000	8.53	200.1	11.92	27.88	94.2	0	29.09
23	23	1100	6.904	203.4	13.98	30.17	89.2	0	29.11
23	23	1200	6.242	213.4	18.71	29.77	94.6	0	29.09
23	23	1300	5.317	239.4	15.26	30.25	98.5	0	29.07
23	23	1400	4.945	242.4	12.89	29.92	100.3	0	29.06
23	23	1500	2.93	243.7	18.87	30.55	100.3	0	29.06
23	23	1600	3.459	230.6	17.33	30.75	100.2	0	29.08
23	23	1700	1.838	229.4	10.98	30.36	100.3	0	29.08
23	23	1800	1.283	171.5	8.08	30.23	100.3	0	29.09
23	23	1900	2.954	289.6	16.56	30.2	100.3	0	29.09
23	23	2000	2.585	292.7	12.9	29.81	100.3	0	29.09
23	23	2100	3.894	303.9	15.84	29.56	100.2	0	29.09
23	23	2200	4.606	287.8	16.52	29.6	100.2	0	29.08
23	23	2300	6.124	297.5	15.57	29.74	100.2	0	29.08
24	24	0	6.903	298.9	13.95	29.83	100.2	0	29.07
24	24	100	6.476	295.6	15.31	29.81	100.2	0	29.06
24	24	200	6.129	302.7	14.98	29.92	100.2	0	29.06
24	24	300	7.59	293.4	16.65	29.85	100.2	0	29.07
24	24	400	8.69	294.8	15.69	29.55	100.2	0	29.07
24	24	500	8.35	291	16.56	29.49	100.2	0	29.07
24	24	600	8.74	293.4	16.56	29.71	100.2	0	29.07
24	24	700	9.51	303.6	14.74	30.16	100.2	0	29.08
24	24	800	9.86	304.5	14.88	30.18	100.2	0	29.09
24	24	900	9.27	296.3	15.44	30.14	100.3	0	29.1
24	24	1000	9.22	301.1	15.86	30.68	100.3	0	29.12
24	24	1100	10.64	300.6	15.32	31.42	100.3	0	29.12
24	24	1200	10.79	302.2	15.57	32.36	100.3	0	29.12
24	24	1300	10.79	317.7	14.04	32.53	100.3	0	29.12
24	24	1400	9.46	350.5	10.98	31.05	100.3	0	29.12
24	24	1500	9.63	342.1	11.74	31.78	100.3	0	29.14
24	24	1600	9.62	322.8	13.08	31.62	100.3	0	29.16
24	24	1700	10.52	315.2	12.55	31.06	100.3	0	29.18
24	24	1800	9.69	320	12.03	30.66	100.3	0	29.2
24	24	1900	7.66	307	14.88	30.44	100.3	0	29.21
24	24	2000	10.68	310.3	14.11	30.77	100.3	0	29.23
24	24	2100	9.94	309.7	14.74	30.81	100.3	0	29.24
24	24	2200	10.16	309.2	14.58	30.6	100.3	0	29.24
24	24	2300	8.86	313.2	13.83	30.69	100.3	0	29.25
25	25	0	11	305.7	14.68	30.63	100.3	0	29.25
25	25	100	9.36	306.2	14.22	30.5	100.3	0	29.24
25	25	200	11.18	307.5	14.96	31.06	100.3	0.02	29.25
25	25	300	11.82	305.6	13.66	31.49	100.3	0	29.25
25	25	400	11.07	301.9	14.52	31.51	100.3	0	29.26
25	25	500	11.04	305	14.66	31.47	100.3	0	29.27

Day	DATE JD	TIME 24H	WS MPH	WD Deg	SIGMA Deg	AT DegF	RH %	RN inch	BP inHg
25	25	600	10.45	318.1	12.12	30.96	100.3	0	29.28
25	25	700	10.65	316.1	13.14	30.08	100.3	0	29.29
25	25	800	9.98	316	12.19	30.36	100.3	0	29.29
25	25	900	9.88	315.7	13.27	30.7	100.3	0	29.3
25	25	1000	10.8	316.5	13.24	31.29	100.3	0	29.32
25	25	1100	10.93	321.3	13.07	31.74	100.3	0	29.32
25	25	1200	10.48	321.3	14.01	32.82	100.3	0	29.31
25	25	1300	10.99	321.7	14.74	33.05	98.8	0	29.3
25	25	1400	10.55	317.4	13.78	32.6	98.8	0	29.28
25	25	1500	11.89	318.9	14.27	32.55	95.5	0	29.27
25	25	1600	11.88	313.3	14.22	31.34	98.1	0	29.27
25	25	1700	10.14	311.3	13.61	30.34	100.3	0	29.27
25	25	1800	8.33	304.4	16.53	29.84	100.3	0	29.28
25	25	1900	7.89	298.5	15.23	29.33	100.3	0	29.28
25	25	2000	6.469	291	16.38	29.02	100.2	0	29.28
25	25	2100	6.96	289.5	16.79	29.19	100.2	0	29.28
25	25	2200	6.722	279.6	15.46	28.89	100.2	0	29.27
25	25	2300	6.871	285.9	16.16	28.64	100.2	0	29.27
26	26	0	7.25	301.5	17.48	28.68	100.2	0	29.26
26	26	100	7.94	303	14.48	28.43	100.2	0	29.25
26	26	200	6.506	299.8	15.02	28.04	100.2	0	29.25
26	26	300	7.68	295.3	14.47	27.28	100.2	0	29.26
26	26	400	7.9	300.8	15.1	26.68	100.2	0	29.25
26	26	500	7.85	323	12.74	26.02	100.2	0	29.25
26	26	600	7.35	326.4	11.38	25.88	100.3	0	29.25
26	26	700	6.416	326.5	15.76	26.11	100.3	0.01	29.26
26	26	800	7.29	8.32	10.25	24.58	100.3	0.03	29.27
26	26	900	7.86	358.7	9.93	24.41	100.3	0	29.28
26	26	1000	6.806	346.5	12.39	25.36	100.3	0	29.3
26	26	1100	4.899	330.9	15.15	26.64	100.2	0.01	29.31
26	26	1200	4.52	337.5	17.11	26.84	100.3	0	29.29
26	26	1300	3.907	326.2	20.55	28.21	100.3	0.02	29.28
26	26	1400	4.613	334.8	16.53	28.33	100.3	0	29.26
26	26	1500	8.72	302.3	20.02	29.38	100.3	0.01	29.25
26	26	1600	12.91	292.6	16.76	29.6	100.3	0	29.25
26	26	1700	9.06	286.9	16.12	28.32	100.3	0	29.25
26	26	1800	12.21	279	15.38	28.27	99.1	0	29.25
26	26	1900	13.75	269.4	13.46	28.04	95	0	29.26
26	26	2000	14.95	271.6	13.67	27.71	94.8	0	29.26
26	26	2100	16.79	268.5	12.48	26.81	90.3	0	29.26
26	26	2200	16.78	268.1	12.52	26.31	86.1	0	29.26
26	26	2300	16.1	267.9	11.08	25.89	89	0	29.25
27	27	0	14.16	268.8	12.23	26.16	89.4	0	29.24
27	27	100	14.97	272.3	15.06	27.45	89.7	0	29.23
27	27	200	15.95	269.3	13.05	27.67	97.4	0	29.24
27	27	300	15.16	270.6	12.95	27.92	99.8	0	29.24
27	27	400	10.52	303.4	16.27	27.55	100.2	0	29.24
27	27	500	11.68	316.6	12.24	26.57	100.2	0	29.24
27	27	600	9.73	345.1	10.19	25.29	100.2	0	29.25
27	27	700	9.11	350.5	9.92	23.72	100.3	0	29.25
27	27	800	8.99	355.3	10.71	23.12	100.3	0	29.26
27	27	900	10.01	347.4	10.27	23.06	100.2	0	29.28
27	27	1000	11.25	339.2	11.68	23.45	98.3	0	29.29
27	27	1100	11.47	329.7	13.19	25.01	91.5	0	29.31
27	27	1200	11.52	331.6	13.4	25.16	92.2	0	29.3
27	27	1300	11.92	314.4	17.05	26.63	84.6	0	29.3
27	27	1400	11.82	316.5	15.69	26.47	81.8	0	29.29
27	27	1500	11.05	324.3	13.33	25.57	83.5	0	29.29

Day	DATE JD	TIME 24H	WS MPH	WD Deg	SIGMA Deg	AT DegF	RH %	RN inch	BP inHg
27	27	1600	10	317.1	14.74	25.23	84.6	0	29.29
27	27	1700	7.92	324.9	13.23	23.39	86.9	0	29.29
27	27	1800	6.17	329.5	11.37	20.24	93.5	0	29.28
27	27	1900	6.76	319.2	13.03	20.94	96.9	0	29.31
27	27	2000	6.817	305.2	15.61	21.73	100.2	0	29.32
27	27	2100	7.44	341.9	10.43	21.42	100.2	0	29.31
27	27	2200	8.9	348.3	9.89	20.54	99.2	0	29.32
27	27	2300	8.15	9.45	8.76	18.66	100.1	0	29.33
28	28	0	4.982	5.885	9.22	17.1	100.2	0	29.33
28	28	100	11.35	33.09	11.78	14.2	100.2	0	29.33
28	28	200	8.56	41.89	8.96	10.86	100.2	0	29.33
28	28	300	3.171	19.88	7.68	6.705	100.1	0	29.34
28	28	400	1.005	302.9	6.806	2.985	100.2	0	29.34
28	28	500	2.667	6.942	11.85	7.54	100.2	0	29.36
28	28	600	4.928	51.94	5.933	8.01	100.2	0	29.37
28	28	700	5.661	38.15	5.272	5.145	100.2	0	29.38
28	28	800	5.067	56.27	9.73	2.945 (4)	100.2	0	29.39
28	28	900	3.85	20.55	12.91	10.69 (4)	99.3	0	29.42
28	28	1000	7.67	343.9	12.43	14.62	98.2	0	29.44
28	28	1100	8.77	340.7	14.68	16.87	83.9	0	29.45
28	28	1200	8.13	342	20.79	18.82	77.3	0	29.45
28	28	1300	6.253	320.8	22.71	20.9	69.44	0	29.43
28	28	1400	8.24	331.5	16.86	20.42	65.76	0	29.4
28	28	1500	8.87	351.5	15.36	20.65	63.27	0	29.38
28	28	1600	8.43	8.54	12.63	20.13	65.56	0	29.38
28	28	1700	7.57	8.64	10.33	18.05 (4)	77.8	0	29.37
28	28	1800	6.017	8.38	5.567	12.67 (4)	94.9	0	29.36
28	28	1900	6.328	11.16	4.423	9.78	100.2	0	29.38
28	28	2000	6.098	15.08	4.121	8.04	100.1	0	29.4
28	28	2100	6.329	16.69	3.508	7.85	100.1	0	29.41
28	28	2200	3.545	18.02	13.96	9.15	100.1	0	29.42
28	28	2300	2.024	3.503	11.29	10.3	100.1	0	29.42
29	29	0	2.494	5.578	6.093	7.16	100.1	0	29.41
29	29	100	0.992	14.87	5.286	3.813	100.1	0	29.41
29	29	200	0.76	6.995	5.437	1.684	100.1	0	29.4
29	29	300	1.892	51.57	3.767	0.505	100.2	0	29.41
29	29	400	1.808	55.77	0.18	0.188	100.1	0	29.41
29	29	500	3.207	45.63	7.18	-0.205	100.2	0	29.41
29	29	600	1.83	11.88	6.093	-0.034	100.2	0	29.41
29	29	700	1.581	35.01	0.116	-0.861	100.2	0	29.42
29	29	800	2.519	56.83	13.38	-0.153 (4)	100.2	0	29.44
29	29	900	3.035	141.9	6.442	10.1 (4)	100.2	0	29.46
29	29	1000	5.352	182.1	8.55	16.66 (4)	99.2	0	29.5
29	29	1100	6.831	184.8	10.08	18.85	94.3	0	29.52
29	29	1200	5.862	196.1	20.18	22.14	82.3	0	29.53
29	29	1300	3.575	215	24.84	26.99	63.94	0	29.51
29	29	1400	4.248	323	20.97	28.61	60.4	0	29.5
29	29	1500	4.646	339.1	20.82	27.85	61.41	0	29.48
29	29	1600	3.699	43.55	24.58	30.06	63.06	0	29.46
29	29	1700	2.688	74.8	13.73	25.24 (4)	73.3	0	29.44
29	29	1800	5.225	87.9	3.251	18.82 (4)	96.7	0	29.4
29	29	1900	5.939	94.2	3.757	15.81	100.2	0	29.38
29	29	2000	4.384	124.6	10.15	14.94	100.2	0	29.36
29	29	2100	4.257	151.4	8.53	15.2	98.5	0	29.35
29	29	2200	4.216	130.9	11.78	13.51	100.2	0	29.34
29	29	2300	6.753	153.9	7.05	16.64	100.2	0	29.32
30	30	0	6.909	155.2	8.63	17.04	100.2	0	29.31
30	30	100	6.054	155.1	9.94	17.45	100.2	0	29.29

Day	DATE JD	TIME 24H	WS MPH	WD Deg	SIGMA Deg	AT DegF	RH %	RN inch	BP inHg
30	30	200	8.76	188.1	10.15	19.84	98.8	0	29.28
30	30	300	10.09	191.8	8.29	20.84	96.8	0	29.28
30	30	400	11.25	185.2	7.61	20.72	100.2	0	29.27
30	30	500	9.57	181.3	12.28	20.18	100.3	0	29.26
30	30	600	4.793	293.5	19.63	18.11	99.9	0	29.26
30	30	700	4.347	168.6	26.09	14.84	100.2	0	29.24
30	30	800	4.274	167	7.88	14.38 (4)	100.2	0	29.23
30	30	900	3.21	154.1	12.89	19.87 (4)	100.2	0	29.26
30	30	1000	3.551	189.8	12.52	24.43 (4)	96.8	0	29.29
30	30	1100	3.364	256.8	34.71	29.46 (4)	82.7	0	29.3
30	30	1200	5.583	325.2	22.85	29.15	90.1	0	29.3
30	30	1300	4.474	296.1	31.34	29	89.2	0	29.25
30	30	1400	4.831	344.8	29.58	33.76	77.7	0	29.23
30	30	1500	7.11	323.3	18.73	31.76	83.2	0	29.21
30	30	1600	4.809	344.2	25.8	32.37	80.4	0	29.18
30	30	1700	3.684	11.07	31.05	30.15	85.5	0	29.16
30	30	1800	2.061	254.6	15.23	25.46	96.1	0	29.13
30	30	1900	1.864	289	9.84	21.16	100.2	0	29.1
30	30	2000	1.966	291.7	15.05	21.82	100.2	0	29.09
30	30	2100	3.392	188.6	13.08	25.09	100.3	0	29.08
30	30	2200	3.498	190.3	10.19	26.26	100.3	0	29.08
30	30	2300	4.727	212.7	11.77	26.92	99.4	0	29.06
31	31	0	6.435	196.8	11.85	27.55	100.2	0	29.05
31	31	100	5.771	217.6	10.04	27.81	100	0	29.04
31	31	200	9.05	241.2	9.85	28.7	99.6	0	29.03
31	31	300	11.07	234.7	8.48	28.86	100.2	0	29.03
31	31	400	10.61	237.1	9.79	28.62	100.2	0	29.02
31	31	500	6.654	223.6	10.32	28.29	100.2	0	29.01
31	31	600	7.85	209	9.6	28.3	100.2	0	28.99
31	31	700	9.32	204.6	9.87	28.04	100.2	0	28.97
31	31	800	9.45	202.4	9.51	27.64	100	0	28.96
31	31	900	11.69	198	9.84	28.47	96.6	0	28.95
31	31	1000	12.42	194.2	9.61	29.31	87.9	0	28.95
31	31	1100	12.56	196	9.94	31.34	72.8	0	28.93
31	31	1200	13.79	200.2	10.75	35.16	60.01	0	28.92
31	31	1300	14.29	207.5	11.07	37.41	53.75	0	28.88
31	31	1400	12.49	202.8	11.99	39.16	54.77	0	28.84
31	31	1500	13.73	210.4	10.3	39.16	57.38	0	28.82
31	31	1600	13.02	204.6	10.24	38.77	59.57	0	28.8
31	31	1700	8.73	209.4	10.47	39.49	59.49	0	28.81
31	31	1800	7.53	209.3	8.8	38.04	65.77	0	28.8
31	31	1900	5.396	269	22.78	37.09	70.6	0	28.8
31	31	2000	10.48	243.6	15.74	36.37	76.1	0	28.8
31	31	2100	13.09	248.7	10.48	36.38	78.4	0	28.81
31	31	2200	11.95	249.1	10.28	35.5	84.3	0	28.81
31	31	2300	10.63	233.6	10.37	35.25	86.1	0	28.8
01-Feb	32	0	12.18	241.7	9.43	35.03	89.6	0	28.8
1	32	100	14.79	251.2	10.38	34.78	92.1	0	28.8
1	32	200	17.62	252.5	9.81	34.8	93.8	0	28.79
1	32	300	16.49	245.8	10.02	35.01	95.5	0	28.79
1	32	400	13.86	242.4	9.45	35.26	97.7	0	28.78
1	32	500	12.12	236.3	8.88	35.5	98.6	0	28.77
1	32	600	11.07	225.3	9.37	35.66	99.1	0	28.77
1	32	700	11.91	233.1	9.93	36.03	98.9	0	28.77
1	32	800	10.72	229	10.19	36.37	99.4	0	28.78
1	32	900	9.33	213	10.83	36.66	97.7	0	28.8
1	32	1000	10.34	221.8	9.75	36.9	97.7	0	28.8
1	32	1100	12.88	226.1	9.85	36.17	100.3	0	28.81

Day	DATE JD	TIME 24H	WS MPH	WD Deg	SIGMA Deg	AT DegF	RH %	RN inch	BP inHg
1	32	1200	9.67	216.7	10.62	35.73	100.3	0	28.8
1	32	1300	10.16	221.1	10.16	36.97	100.3	0	28.78
1	32	1400	10.71	225.7	9.96	37.33	100.2	0	28.78
1	32	1500	8.91	223.4	9.99	36.73	100.3	0	28.77
1	32	1600	8.54	226.1	10.16	36.57	100.3	0	28.78
1	32	1700	7.43	225.6	10.07	36.1	100.3	0	28.79
1	32	1800	7.09	243.6	8.98	35.24	100.3	0	28.81
1	32	1900	7.42	247.8	8.92	34.38	100.3	0	28.83
1	32	2000	9.77	264	10.14	34.41	100.3	0	28.84
1	32	2100	8.19	260.8	9.71	34.06	100.3	0	28.84
1	32	2200	10.34	266.3	12.43	33.63	100.3	0	28.86
1	32	2300	9.71	299.6	14.97	32.28	100.3	0	28.87
2	33	0	10.1	321.2	13.35	31.03	100.3	0	28.87
2	33	100	11.78	299.7	15.21	30.18	100.3	0	28.89
2	33	200	12.45	294.1	19.1	29.45	100.3	0	28.9
2	33	300	12.81	351.8	10.31	26.47	100.2	0	28.93
2	33	400	12.34	347.1	10.57	24.54	100.2	0	28.94
2	33	500	11.57	353.4	9.11	22.61	100.3	0	28.97
2	33	600	10.38	349.8	11.07	21.18	100.3	0	28.99
2	33	700	9.95	353.2	9.55	19.02	99.7	0	29.02
2	33	800	10.39	354.6	9.09	17.41	99.8	0	29.04
2	33	900	9.47	357.6	10.5	17.38	99.5	0	29.08
2	33	1000	9.78	351.6	12.9	17.61	97.6	0	29.1
2	33	1100	10.06	344.1	13.98	19.33	88	0	29.13
2	33	1200	9.46	332.5	16.44	19.49	85.4	0	29.14
2	33	1300	9.83	325.5	13.82	20.26	81.5	0	29.14
2	33	1400	10.11	321.3	15.52	20.96	77.9	0	29.15
2	33	1500	10.63	330.5	17.65	20.61	77.5	0	29.16
2	33	1600	10.14	353.2	13.02	19.8	78.3	0	29.17
2	33	1700	9.26	1.962	10.26	17.49	83.3	0	29.18
2	33	1800	8.37	359.2	9.88	14.65	92.9	0	29.2
2	33	1900	7.87	1.027	9.54	13.4	97.6	0	29.22
2	33	2000	4.783	10.14	8.69	11.57	99.3	0	29.23
2	33	2100	3.129	11.34	10.98	11.72	100.2	0	29.24
2	33	2200	2.224	10.13	9.73	12.04	100.2	0	29.26
2	33	2300	3.056	329.3	9.27	11.04	100.2	0	29.26
3	34	0	4.499	26.65	9.54	11.43	100.2	0	29.27
3	34	100	5.445	43.59	8.39	11.25	100.2	0	29.27
3	34	200	4.584	23.97	11.04	8.77	100.1	0	29.27
3	34	300	3.411	13.12	7.42	7.37	100.1	0	29.28
3	34	400	1.323	37.05	0.134	5.136	100.1	0	29.28
3	34	500	4.601	69.04	7.4	5.083	100.1	0	29.29
3	34	600	3.15	76.7	6.646	4.713	100.1	0	29.31
3	34	700	4.01	105.2	10.83	5.653 (4)	100.1	0	29.32
3	34	800	2.946	171.6	24.51	11.05 (4)	100.2	0	29.34
3	34	900	3.728	178.9	21.93	14.34	100.2	0	29.34
3	34	1000	4.813	193.3	18.47	16.28	100.2	0	29.35
3	34	1100	4.183	165.8	25.33	21.17	90.7	0	29.36
3	34	1200	3.746	146.4	42.27	25.15	75.7	0	29.38
3	34	1300	6.503	122.5	24.57	24.2	70	0	29.33
3	34	1400	7.25	90.5	19.31	24.99	64.79	0	29.28
3	34	1500	6.963	111.9	19.68	24.77	62.97	0	29.25
3	34	1600	6.078	128.2	20.24	24.62	61.21	0	29.24
3	34	1700	6.891	98.9	10.11	23.19	66.96	0	29.2
3	34	1800	5.718	94.7	9.2	21.72	73.3	0	29.18
3	34	1900	7.65	113.9	8.05	21.42	63.71	0	29.15
3	34	2000	7.43	118.2	8.93	21	58.93	0	29.13
3	34	2100	8.13	133	10.8	22.15	57.79	0	29.1

Day	DATE JD	TIME 24H	WS MPH	WD Deg	SIGMA Deg	AT DegF	RH %	RN inch	BP inHg
3	34	2200	6.769	139.3	13.23	22.24	59.3	0	29.07
3	34	2300	7.44	124.7	10.82	21.87	60.92	0	29.04
4	35	0	8.82	137.1	11.14	23.45	60.18	0	29.01
4	35	100	8.14	137.3	11.28	24.98	58.21	0	28.99
4	35	200	11.98	159.5	13.7	25.18	69.38	0	28.96
4	35	300	10.43	147.1	11.22	22.15	100.2	0	28.93
4	35	400	9.95	146	12.44	21.87	100.2	0	28.9
4	35	500	10.34	142.8	11.79	22.08	100.2	0	28.85
4	35	600	6.815	131.8	12.59	21.71	100.2	0	28.81
4	35	700	5.873	116.9	10.59	21.89	100.2	0	28.79
4	35	800	5.17	102	9.84	21.75	100.2	0.02	28.77
4	35	900	4.12	95.3	11.18	22.31	100.2	0.04	28.76
4	35	1000	3.516	93.1	10.21	23.96	100.3	0.05	28.73
4	35	1100	4.489	8.95	14.42	24.86	100.3	0.01	28.71
4	35	1200	7.37	351.8	9.84	24.86	100.3	0.03	28.67
4	35	1300	7.83	4.405	9.78	24.91	100.2	0	28.64
4	35	1400	7.15	1.373	9.16	23.67	100.2	0	28.61
4	35	1500	7.2	356.6	10.99	24.51	100.2	0	28.58
4	35	1600	6.218	334.4	12.27	24.08	100.2	0.03	28.57
4	35	1700	9.7	314	13.5	24.47	100.2	0.01	28.56
4	35	1800	9.44	316.4	13.55	25.2	100.3	0	28.56
4	35	1900	13.05	330.6	11.43	25.08	100.3	0	28.56
4	35	2000	12.55	333.4	10.8	24.39	100.3	0	28.55
4	35	2100	14.61	338.6	10.37	23.45	100.3	0	28.54
4	35	2200	15.2	341	10.59	22.4	100.3	0	28.53
4	35	2300	11.61	339.3	11.89	20.66	100.2	0	28.54
5	36	0	15.63	328.2	11.68	20.6	100.2	0	28.54
5	36	100	15.78	323.4	12.04	19.83	100.2	0	28.54
5	36	200	15.26	298.8	15.52	18.88	100.2	0	28.55
5	36	300	20.39	284.1	16.52	15.41	100.2	0	28.59
5	36	400	19.4	281.6	16.14	12.21	100.2	0	28.61
5	36	500	19.06	296.3	17.28	9.35	100.1	0	28.62
5	36	600	18.95	301	16.41	7.12	96.7	0	28.64
5	36	700	17.84	300	17.34	5.486	93	0	28.66
5	36	800	19.09	293.6	17.4	4.603	92.7	0	28.68
5	36	900	16.88	299.5	16.86	3.359	95	0	28.7
5	36	1000	19.02	304.3	16.07	2.34	87.1	0	28.72
5	36	1100	17.7	299.2	16.6	2.466	81.4	0	28.75
5	36	1200	17.09	296.2	17.39	2.262	80.6	0	28.77
5	36	1300	19.33	296.2	17.13	2.195	76.6	0	28.77
5	36	1400	18.94	286.1	17.21	3.116	78.4	0	28.77
5	36	1500	19.29	291.3	18.35	3.787	79.5	0	28.77
5	36	1600	17.34	282.7	17.08	3.847	84	0	28.79
5	36	1700	20.02	281.8	16.68	2.94	78.9	0	28.81
5	36	1800	18.5	281.2	16.63	1.769	86.8	0	28.84
5	36	1900	17.13	279	16.12	2.069	90.2	0	28.85
5	36	2000	18.37	275.3	14.82	2.452	92.7	0	28.86
5	36	2100	19.5	270	12.99	1.246	98.6	0	28.88
5	36	2200	17.44	273.1	14.39	1.55	100.1	0	28.88
5	36	2300	15.38	279.6	16.58	2.386	100.1	0	28.88
6	37	0	14.05	286.1	16.68	2.539	100.1	0	28.88
6	37	100	13.65	289	17.43	2.085	100.1	0	28.89
6	37	200	14.5	301.3	15.09	1.17	100.1	0	28.88
6	37	300	11.08	288.5	15.85	0.452	100.1	0	28.88
6	37	400	9.27	287	17.99	0.249	100.1	0	28.87
6	37	500	9.03	285	19.49	0.987	100.1	0	28.86
6	37	600	10.17	291.4	18.84	1.317	99.4	0	28.86
6	37	700	10.05	298.2	17.31	1.247	100	0	28.86

Day	DATE JD	TIME 24H	WS MPH	WD Deg	SIGMA Deg	AT DegF	RH %	RN inch	BP inHg
6	37	800	11.31	312	13.99	0.801	99	0	28.87
6	37	900	15.38	305.4	15.35	1.241	88.7	0	28.87
6	37	1000	14.08	309.2	15.74	1.441	80.2	0	28.88
6	37	1100	13.6	293.8	18.83	3.041	72.2	0	28.88
6	37	1200	14.44	291.6	17.53	4.704	68.95	0	28.89
6	37	1300	13.74	302.4	17.52	4.901	73.5	0	28.88
6	37	1400	15.53	302.8	18.95	4.693	70.3	0	28.89
6	37	1500	14.92	304	19.87	5.063	67.83	0	28.9
6	37	1600	14.17	301.6	17.69	4.54	68.87	0	28.91
6	37	1700	11.95	298.4	18.53	3.916	71.9	0	28.91
6	37	1800	9.37	289.3	17.4	3.202	76	0	28.92
6	37	1900	7.28	279.8	15.66	2.779	84.6	0	28.93
6	37	2000	10.44	282.7	16.29	4.194	78.9	0	28.94
6	37	2100	10.85	294.9	16.89	4.828	80.4	0	28.96
6	37	2200	11.97	294.9	16.85	4.4	89.9	0	28.97
6	37	2300	12.23	282.1	16.71	4.789	89.7	0	28.98
7	38	0	10.82	276.1	15.6	5.097	91.1	0	28.99
7	38	100	10.97	271.3	14.26	5.071	98	0	28.99
7	38	200	9.89	270.5	13.22	5.541	97.8	0	29
7	38	300	7.46	287.9	16.09	6.504	96	0	29
7	38	400	5.587	290.2	16.46	6.491	96.1	0	28.99
7	38	500	5.37	225.5	12.83	6.085	100.1	0	28.99
7	38	600	6.287	224	9.9	6.991	98.4	0	29
7	38	700	6.032	220.9	9.7	7.02	100.1	0	29
7	38	800	7.6	218.2	10.09	8.2	100.1	0	29.01
7	38	900	8.56	212.7	10.05	10.95	99.6	0	29.02
7	38	1000	10.61	221.9	10.73	15.28	94.5	0	29.03
7	38	1100	10.94	220.2	13.44	17.88	84.3	0	29.04
7	38	1200	11.9	228	11.68	19.86	77.1	0	29.03
7	38	1300	10.56	228.6	16.06	20.58	77.7	0	29
7	38	1400	10.33	249.6	15.35	21.69	82.8	0	28.97
7	38	1500	10.84	250.3	15.3	21.83	79.8	0	28.97
7	38	1600	14.14	238.8	11.46	22.12	68.11	0	28.96
7	38	1700	14.45	233	11.25	20.84	65.99	0	28.96
7	38	1800	14.09	236.7	9.77	19.36	65.89	0	28.96
7	38	1900	12.89	227.3	10.69	18.51	67.05	0	28.97
7	38	2000	12.52	224.4	10.88	17.85	71.2	0	28.98
7	38	2100	12.2	223.5	10.77	16.66	75.6	0	28.98
7	38	2200	13.21	232.2	9.61	16.29	79.3	0	28.98
7	38	2300	13.5	233.7	8.07	15.71	78	0	28.99
8	39	0	12.02	241.4	9.38	14.57	82.6	0	28.99
8	39	100	10.62	254.6	10.14	14.22	88	0	29
8	39	200	9.61	266.9	10.42	13.88	93.7	0	29
8	39	300	8.23	264.9	9.33	12.9	98.4	0	29
8	39	400	9.44	262.6	8.32	12.39	99.4	0	29
8	39	500	9.22	255.1	8.46	11.93	99.8	0	29
8	39	600	9.66	257	8.53	11.78	99.8	0	29.01
8	39	700	8.06	245	10.94	10.93	100.2	0	29.02
8	39	800	8.06	238.9	9.17	10.75	99.4	0	29.03
8	39	900	10.2	251.4	10	14.35	88.4	0	29.07
8	39	1000	11.43	267.4	13.25	17.55	81.7	0	29.1
8	39	1100	13.21	266.5	13.06	19.23	79.1	0	29.12
8	39	1200	12.56	285.4	19.49	18.56	83.7	0	29.12
8	39	1300	10.82	294.6	18.28	20.46	78	0	29.12
8	39	1400	12	321	14.3	17.16	92.2	0	29.11
8	39	1500	12.99	294	18.62	18.07	75.4	0	29.12
8	39	1600	15.86	296.9	18.91	16.4	70.1	0	29.13
8	39	1700	14.68	301	18.01	14.34	75.9	0	29.13

Day	DATE JD	TIME 24H	WS MPH	WD Deg	SIGMA Deg	AT DegF	RH %	RN inch	BP inHg
8	39	1800	12.99	295.7	16.71	11.29	77.2	0	29.14
8	39	1900	10.54	304.5	16.23	10.19	82.6	0	29.16
8	39	2000	9.34	290.6	16.41	9.77	87.1	0	29.16
8	39	2100	12.4	275.8	14.33	10.66	84.1	0	29.17
8	39	2200	12.64	270.9	13.37	11.42	84.1	0	29.18
8	39	2300	13.98	268.5	12.07	12.77	84.5	0	29.18
9	40	0	15.42	268.6	12.88	13.73	84.6	0	29.18
9	40	100	11.17	278.5	15.94	13.45	85	0	29.18
9	40	200	9.96	261.4	10.93	13.01	86.2	0	29.16
9	40	300	7.78	242.7	11.64	12.64	87.2	0	29.15
9	40	400	9.25	237.8	9.52	13.34	86.8	0	29.13
9	40	500	11.13	229.7	12.01	15.47	84.5	0	29.12
9	40	600	8.6	222.3	13.93	15.27	86.1	0	29.1
9	40	700	12.84	227.6	11.14	15.73	83.2	0	29.09
9	40	800	13.07	218.6	10.01	15.78	79.5	0	29.09
9	40	900	14.37	209.3	10.55	17.62	69.45	0	29.09
9	40	1000	15.05	208.6	11.17	19.75	62.33	0	29.07
9	40	1100	15.76	209.8	10.88	20.6	58.4	0	29.03
9	40	1200	14.63	203.6	11.09	21.75	54.9	0	29
9	40	1300	14.18	219.4	11.29	23.59	52.88	0	28.98
9	40	1400	16.39	241.1	11.46	26.23	55.24	0	28.97
9	40	1500	14.37	255.6	11.36	26.5	63.55	0	28.95
9	40	1600	15.42	257.9	10.48	25.74	73.4	0	28.95
9	40	1700	14.39	242.2	9.67	24.53	81.6	0	28.96
9	40	1800	11.36	236.6	12.64	23.97	84	0	28.96
9	40	1900	11.93	237.8	11.76	24.08	81.5	0	28.97
9	40	2000	12	226.8	11.54	24.45	81.6	0	28.99
9	40	2100	12.89	223.8	11.19	24.54	83.8	0	28.99
9	40	2200	12.05	219	12.11	24.68	87.8	0	28.99
9	40	2300	12.63	229.8	10.97	25.3	89.5	0	29
10	41	0	11.35	229.8	9.46	25.84	91.9	0	29.02
10	41	100	10.97	228.7	9.93	25.98	95.4	0	29.03
10	41	200	11.1	244.4	8.75	26	96.3	0	29.04
10	41	300	8.72	224.3	10.68	25.2	99.1	0	29.05
10	41	400	7.7	223	9.2	23.71	100.3	0	29.03
10	41	500	5.753	208.9	10.47	22.9	100.2	0	29.01
10	41	600	6.812	189	15.06	21.64	100.2	0	29.01
10	41	700	7.5	160.3	12.66	23.05	100.2	0	29.02
10	41	800	7.67	163.6	11.22	24.16	100.2	0	29.02
10	41	900	9.76	173.5	15.57	26.52	98.1	0	29.01
10	41	1000	13.36	173.9	9.26	27.84	91.6	0	28.98
10	41	1100	13.87	178	9.68	29.96	86.5	0	28.96
10	41	1200	15.75	175.4	8.89	31.31	83.7	0	28.93
10	41	1300	16.45	175.8	9.18	32.64	81.4	0	28.89
10	41	1400	20.13	182.8	7.94	34.4	76.5	0	28.85
10	41	1500	18.31	179.3	8.42	36.01	72	0	28.81
10	41	1600	15.36	177	8.95	36.79	68.62	0	28.79
10	41	1700	13.14	183.1	10	36.98	72.3	0	28.78
10	41	1800	16.27	195.2	10.39	35.89	91.4	0	28.77
10	41	1900	14.92	186.5	8.99	34.94	99.7	0	28.76
10	41	2000	12.97	191.9	9.1	35.43	96.5	0	28.77
10	41	2100	10.29	197.6	9	35.88	96.4	0	28.77
10	41	2200	10.52	214.5	10.87	36.68	94	0	28.78
10	41	2300	12.28	221.1	11.12	36.86	90.4	0	28.78
11	42	0	14.06	234.5	9.39	36.43	84.7	0	28.78
11	42	100	11.97	231.2	9.54	35.62	81.7	0	28.78
11	42	200	13.77	255.6	13.66	34.58	87	0	28.8
11	42	300	16.77	266.4	11.86	32	80.3	0	28.84

Day	DATE JD	TIME 24H	WS MPH	WD Deg	SIGMA Deg	AT DegF	RH %	RN inch	BP inHg
11	42	400	14.52	263.2	10.27	30.54	76.7	0	28.85
11	42	500	16.17	256	10.78	29.62	74.5	0	28.87
11	42	600	10.64	282.7	16.38	27.05	84.9	0	28.88
11	42	700	12.83	300.4	16.01	23.49	95.1	0	28.9
11	42	800	9.68	303.4	16.29	21.56	86.2	0	28.92
11	42	900	7.16	313.5	14.38	21.14	79.8	0	28.92
11	42	1000	4.724	325.7	38.97	25.94	71.7	0	28.95
11	42	1100	4.842	216.1	31.49	29.98	67.97	0	28.98
11	42	1200	11.97	246.9	15.73	31.46	59.71	0	28.95
11	42	1300	17.67	253.4	11.04	31.85	52.32	0	28.9
11	42	1400	17.63	254.8	11.12	31.7	50.97	0	28.89
11	42	1500	14.13	281.4	16.83	29.66	51.63	0	28.9
11	42	1600	14.57	298.9	17.72	25.85	67.39	0	28.91
11	42	1700	15.17	296	17.45	22.47	69.94	0	28.91
11	42	1800	14.13	288.2	17.95	19.18	74.7	0	28.92
11	42	1900	14.92	279.8	15.96	17.86	72.6	0	28.93
11	42	2000	17.89	269.1	12.85	17.21	64.11	0	28.96
11	42	2100	18.51	298.7	17.04	12.37	94.9	0	29.01
11	42	2200	17.52	290.2	16.99	7.98	80.8	0	29.05
11	42	2300	15.19	290.2	18.13	5.935	82.2	0	29.07
12	43	0	16.36	281.4	16.98	3.84	69.99	0	29.09
12	43	100	15.6	273.3	14.6	2.087	54.62	0	29.11
12	43	200	17.4	270.8	14.42	1.63	58.4	0	29.12
12	43	300	16.86	268.3	12.58	1.497	62.74	0	29.12
12	43	400	17.77	261.3	10.66	1.978	67.13	0	29.12
12	43	500	15.03	262.7	11.11	2.363	67.71	0	29.12
12	43	600	15.32	258.9	11.2	2.69	72.6	0	29.13
12	43	700	14.13	249.3	10.36	2.937	73.7	0	29.13
12	43	800	13.53	249.9	10.46	4.176	72.7	0	29.14
12	43	900	11.9	256.6	10.02	7.19	67.57	0	29.17
12	43	1000	16	261.6	11.31	9.62	65.62	0	29.19
12	43	1100	17.85	258	12.38	12.48	67.89	0	29.21
12	43	1200	20.13	259.7	11.03	15.75	67.06	0	29.24
12	43	1300	19.61	263.7	10.99	16.73	68.72	0	29.25
12	43	1400	18.4	264.6	12.17	16.92	73.1	0	29.25
12	43	1500	18.53	264.3	13.32	15.75	78.4	0	29.25
12	43	1600	16.95	259	11.22	16.25	78.1	0	29.27
12	43	1700	17.74	262.9	11.19	16.04	68.09	0	29.29
12	43	1800	18.44	257.7	14.24	13.49	68.93	0	29.3
12	43	1900	15.19	248.8	10.51	12.18	69.9	0	29.32
12	43	2000	13.26	240.7	10.01	11.63	69.59	0	29.33
12	43	2100	11.79	228.7	10.85	11.03	70.7	0	29.34
12	43	2200	11.77	244.8	10.03	10.18	72.2	0	29.35
12	43	2300	8.96	237	9.89	9.97	74.5	0	29.36
13	44	0	7.57	219.2	11.52	9.74	75.9	0	29.36
13	44	100	10.8	220.3	10.45	10.19	74.1	0	29.37
13	44	200	10.57	225.5	11.56	9.71	73	0	29.38
13	44	300	9.4	219.5	12.62	9.28	73.9	0	29.38
13	44	400	10.25	216.3	10.32	9.12	74.6	0	29.38
13	44	500	10.7	211.6	10.85	8.91	76.5	0	29.38
13	44	600	11.67	206.5	9.92	8.81	81.3	0	29.38
13	44	700	12.06	206	9.6	8.22	84.1	0	29.38
13	44	800	11.5	201.5	10.46	8.52	86.9	0	29.39
13	44	900	12.92	202.4	9.91	10.27	82.8	0	29.41
13	44	1000	12.72	207.1	11.1	12.72	75.4	0	29.43
13	44	1100	12.65	212.3	13.33	15.41	70.7	0	29.42
13	44	1200	13.86	220.5	12.02	17.66	68.86	0	29.41
13	44	1300	13.39	221.7	13.36	19.4	66.91	0	29.39

Day	DATE JD	TIME 24H	WS MPH	WD Deg	SIGMA Deg	AT DegF	RH %	RN inch	BP inHg
13	44	1400	13.99	232.7	14.71	22.15	64.14	0	29.36
13	44	1500	14.11	226.9	13.44	22.63	61.09	0	29.34
13	44	1600	15.19	258.2	11.63	23.73	57.28	0	29.33
13	44	1700	16.59	255	10.44	23.87	59.44	0	29.33
13	44	1800	14.11	246.8	11.14	22.61	68.79	0	29.32
13	44	1900	13.88	234.8	10.19	21.7	87.7	0	29.32
13	44	2000	11.77	236.3	9.38	21.73	83.9	0	29.33
13	44	2100	10.8	232.5	10.99	22.08	76.9	0	29.33
13	44	2200	12.14	232	10.49	21.77	73.5	0	29.32
13	44	2300	11.32	217.7	11.16	21.63	72.6	0	29.31
14	45	0	13.07	220.6	11.62	22.08	69.94	0	29.31
14	45	100	13.12	285.8	17.69	20.48	94.4	0	29.33
14	45	200	11.53	298.4	16.95	18.55	100.2	0	29.34
14	45	300	11.12	275.8	16.14	17.2	100.2	0	29.36
14	45	400	10.04	273.7	14.2	15.63	95.6	0	29.38
14	45	500	11.44	273.8	13.86	14.57	84.8	0	29.41
14	45	600	14.09	262.9	10.25	13.9	83.4	0	29.44
14	45	700	11.23	266.7	12.77	12.91	83	0	29.46
14	45	800	11.21	249.4	10.07	12.38	81.3	0	29.49
14	45	900	10.68	243.3	12.07	15.3	70.4	0	29.52
14	45	1000	13.33	254.4	11.57	18.53	63.97	0	29.56
14	45	1100	12.61	264.1	11.35	21.38	59.28	0	29.58
14	45	1200	10.29	251.8	13.13	23.43	57.46	0	29.6
14	45	1300	8.41	262.8	23.04	24.74	54.92	0	29.57
14	45	1400	7.55	215.7	26.07	23.81	53.8	0	29.56
14	45	1500	5.7	230.4	29.8	25.63	50.69	0	29.57
14	45	1600	5.733	241.8	22.08	25.2	51.27	0	29.58
14	45	1700	4.355	290.1	28.52	24.03 (4)	53.02	0	29.57
14	45	1800	5.97	352.1	10.71	18.72 (4)	68.26	0	29.56
14	45	1900	5.88	17.28	8.22	14.65	77.7	0	29.55
14	45	2000	5.626	33.67	6.264	11.74	84.8	0	29.55
14	45	2100	5.641	53.47	11.88	10.45	87	0	29.54
14	45	2200	6	92.8	4.613	7.39	95.3	0	29.53
14	45	2300	5.151	47.59	10.53	6.427	97.1	0	29.54
15	46	0	4.656	60.15	11.94	5.263	97.7	0	29.54
15	46	100	5.731	88.1	8.24	5.298	100.1	0	29.53
15	46	200	4.917	131.6	12.7	6.266	99.2	0	29.53
15	46	300	6.25	137.1	8.94	7.01	98.3	0	29.52
15	46	400	6.846	149.2	9.93	9.79	100.2	0	29.51
15	46	500	8.05	136.4	9.94	11.85	88	0	29.46
15	46	600	6.754	147.7	10.69	12.92	91.6	0	29.44
15	46	700	7.36	128.2	10.16	13.5	83.7	0	29.42
15	46	800	10.03	144.4	10.28	16.59	74.4	0	29.39
15	46	900	8.79	143.6	11.97	20.18 (4)	71.5	0	29.37
15	46	1000	18.08	177.4	9.87	25.82 (4)	71.9	0	29.34
15	46	1100	*27.01* A	172.5	9.46	28.7	64.6	0	29.29
15	46	1200	*29.32* A	174.4	9.1	30.36	74.8	0	29.26
15	46	1300	*29.25* A	176.3	8.67	31.16	81.2	0	29.22
15	46	1400	*29.76* A	174.9	9.37	32.46	81.4	0	29.18
15	46	1500	*27.89* A	170.7	10.17	32.26	83.8	0	29.13
15	46	1600	*25.71* A	171.2	11.16	32.55	86.4	0	29.08
15	46	1700	*26.78* A	177.7	9.08	32.58	90.6	0	29.04
15	46	1800	*27.45* A	174.6	9.7	32.69	95.4	0	29.01
15	46	1900	*25.74* A	175.5	8.91	33.14	100.1	0	28.99
15	46	2000	20.64	172.7	10.89	33.75	100.3	0	28.98
15	46	2100	20.44	183.7	9.29	34.41	100.3	0	28.98
15	46	2200	16.96	189.4	8.62	35.27	100.3	0	28.99
15	46	2300	16.82	189.5	7.74	36.34	100.3	0	29

Day	DATE JD	TIME 24H	WS MPH	WD Deg	SIGMA Deg	AT DegF	RH %	RN inch	BP inHg
16	47	0	14.32	180.5	8.36	37.02	100.3	0	29.03
16	47	100	10.9	271.2	26.63	38.48	100.3	0	29.07
16	47	200	13.26	279.7	17.5	37.99	100	0	29.12
16	47	300	10.88	291.8	17.14	36.77	93.9	0	29.16
16	47	400	15.6	285.1	15.89	35.58	84.6	0	29.18
16	47	500	11.86	283.3	16.66	34.77	77.9	0	29.2
16	47	600	8.41	278.9	16.42	34.44	83.1	0	29.23
16	47	700	9.2	277.4	14.81	34.05	79.4	0	29.25
16	47	800	7.84	274.8	14.39	33.58	77	0	29.28
16	47	900	9.11	269	11.97	34.14	76	0	29.31
16	47	1000	11.87	272.2	13.81	35.71	70.5	0	29.34
16	47	1100	11.15	287.6	16.65	35.32	76.8	0	29.38
16	47	1200	9.06	290.7	17.8	35.39	81.7	0	29.39
16	47	1300	10.96	325.7	12.44	32.81	98.2	0	29.38
16	47	1400	10.33	309.9	14.88	33.38	95.8	0	29.38
16	47	1500	10.64	308.9	17.89	35.97	77.3	0	29.4
16	47	1600	11.43	301.6	16.51	35.18	68.24	0	29.4
16	47	1700	8.81	310.7	16.1	33.61	70.5	0	29.4
16	47	1800	5.596	357.6	9.35	30.43	80.7	0	29.4
16	47	1900	4.291	10.58	8.56	27.44	88.6	0	29.42
16	47	2000	3.46	7.44	5.453	25.38	93.4	0	29.43
16	47	2100	3.128	6.741	8.32	24.05	98.9	0	29.43
16	47	2200	2.718	356.7	8.26	22.06	99.8	0	29.43
16	47	2300	1.022	245.2	9.5	19.94	100.2	0	29.45
17	48	0	3.762	182.1	8.65	21.36	100.3	0	29.46
17	48	100	4.239	194.5	9.17	22.38	100.3	0	29.47
17	48	200	4.072	201.4	12.09	20.6	100.3	0	29.47
17	48	300	1.871	189.5	12.46	19.02	100.2	0	29.48
17	48	400	3.967	178.6	8.41	19.45	100.2	0	29.49
17	48	500	3.771	170.3	9.21	19.66	100.2	0	29.5
17	48	600	4.618	190.5	8.02	18.46	100.2	0	29.53
17	48	700	5.876	177.5	6.911	18.64	100.2	0	29.54
17	48	800	5.734	190	6.908	19.52 (4)	100.2	0	29.55
17	48	900	6.585	204.2	9.93	24.77 (4)	100.3	0	29.62
17	48	1000	6.86	199	15.11	28.49	96.7	0	29.66
17	48	1100	5.016	238	21.8	33.42	79.3	0	29.68
17	48	1200	6.079	253.9	25.97	35.95	69.7	0	29.69
17	48	1300	5.654	263.2	38.04	36.79	65.95	0	29.66
17	48	1400	5.222	278.3	35.65	37.97	60.88	0	29.67
17	48	1500	4.492	302.8	50.89	38.84	58.09	0	29.67
17	48	1600	3.482	273.2	50.29	39.87	56.37	0	29.67
17	48	1700	2.533	243	16.02	39.74 (4)	55.33	0	29.65
17	48	1800	4.403	122	15.76	33.85 (4)	73.2	0	29.62
17	48	1900	5.706	109.1	6.029	28.75 (4)	89.4	0	29.59
17	48	2000	4.753	150.8	8.96	27.06	91.3	0	29.58
17	48	2100	5.118	173.2	5.696	27.3	94.4	0	29.57
17	48	2200	4.191	164.6	7.91	26.84	100.3	0	29.57
17	48	2300	6.881	163.5	9.15	28.28	99.2	0	29.59
18	49	0	9.44	183.3	8.05	29.6	100.3	0	29.58
18	49	100	8.55	187.4	7.82	30.83	99.6	0	29.59
18	49	200	7.62	184.9	7.27	31.62	99.5	0	29.59
18	49	300	9.08	180.5	7.78	32.04	99.3	0	29.6
18	49	400	8.95	178.3	7.58	31.04	96.4	0	29.6
18	49	500	6.862	167.9	9.53	30.07	100.2	0	29.6
18	49	600	5.978	174.5	8.25	29.98	100.3	0	29.6
18	49	700	6.541	174.1	8.29	29.69	100.3	0	29.62
18	49	800	9.49	178.8	7.97	29.4	100.3	0	29.64
18	49	900	10.69	179.9	7.3	30.97	99.5	0	29.66

Day	DATE JD	TIME 24H	WS MPH	WD Deg	SIGMA Deg	AT DegF	RH %	RN inch	BP inHg
18	49	1000	10.76	183.4	8.17	34.29	90	0	29.68
18	49	1100	14.12	178.6	8.13	37.3	75.2	0	29.69
18	49	1200	11.3	185.7	8.88	41.51	62.99	0	29.69
18	49	1300	9.16	185.1	12.65	44.3	55.05	0	29.67
18	49	1400	8.49	183.4	13.51	46.68	38.97	0	29.66
18	49	1500	7.09	184.1	16.45	48.42	38.05	0	29.63
18	49	1600	7.44	129	16.8	48.94	43.05	0	29.62
18	49	1700	7.89	134.9	11.61	47.99	40.36	0	29.59
18	49	1800	6.48	125.5	9.02	44.11	46.44	0	29.56
18	49	1900	8.83	127.7	7.77	41.84	47.53	0	29.55
18	49	2000	7.62	145.5	9.86	40.17	52.35	0	29.54
18	49	2100	7.86	150.7	9.07	38.35	59.15	0	29.52
18	49	2200	12.3	170	9.07	37.66	72	0	29.51
18	49	2300	15	181	7.17	37.18	81.2	0	29.5
19	50	0	15.3	176.3	7.53	37.05	78.9	0	29.47
19	50	100	12.4	174.2	8.7	36.39	85.8	0	29.47
19	50	200	11.79	173.5	9.23	35.81	90.1	0	29.46
19	50	300	13.82	181.2	8.64	35.41	90.5	0	29.43
19	50	400	15.04	188.5	8.55	35.95	87.9	0	29.41
19	50	500	16.97	191.6	8.19	35.89	87.2	0	29.39
19	50	600	14.85	192.1	8.41	35.86	82.8	0	29.4
19	50	700	13.56	184.3	7.4	34.96	90.1	0	29.39
19	50	800	14.02	186.9	8.03	35.75	86.8	0	29.39
19	50	900	14.05	187.4	9.44	38	85.3	0	29.4
19	50	1000	13.51	182.1	9.15	40.97	75.5	0	29.41
19	50	1100	12.98	178.7	8.18	43.56	71.5	0	29.41
19	50	1200	11.77	182.3	7.97	45.76	66.97	0	29.4
19	50	1300	10.83	183.9	8.04	48.91	61.41	0	29.38
19	50	1400	9.57	180.6	9.54	51.76	52.39	0	29.36
19	50	1500	5.157	190.6	21.79	53.44	47.8	0	29.36
19	50	1600	3.711	268.9	22.1	52.53	49.78	0	29.35
19	50	1700	5.441	359	7.26	48.99	58.19	0	29.33
19	50	1800	6.225	5.736	8.61	44.28	67.98	0	29.31
19	50	1900	7.95	358	8.3	39.74	82.6	0	29.32
19	50	2000	5.251	17.45	9.02	35.48	95	0	29.32
19	50	2100	3.294	86.6	7.1	31.97	100.3	0	29.32
19	50	2200	3.232	84.8	5.956	30.95	100.3	0	29.32
19	50	2300	3.836	44.4	13.63	29.29	100.3	0	29.3
20	51	0	4.586	77.2	5.877	28.17	100.3	0	29.27
20	51	100	4.049	132	11.16	27.75	100.2	0	29.24
20	51	200	5.219	166	8.54	29.7	100.2	0	29.23
20	51	300	5.397	169.8	7.62	30.27	100.2	0	29.21
20	51	400	3.262	180.9	9.73	28.91	100.2	0	29.19
20	51	500	3.983	162.4	10.41	27.99	100.2	0	29.18
20	51	600	4.23	150.7	8.19	28.59	100.2	0	29.16
20	51	700	6.159	165	9.32	29.39	100.2	0	29.13
20	51	800	8.41	181.1	7.78	30.62	100.2	0	29.12
20	51	900	10.66	179.9	7.94	33.06	100.3	0	29.12
20	51	1000	10.01	186	9.39	37.41	99.2	0	29.11
20	51	1100	9.31	181.1	11.94	42.1	85.4	0	29.08
20	51	1200	8.36	198.8	13.62	45.35	79	0	29.06
20	51	1300	10.95	181.5	9.97	48.69	66.51	0	29.01
20	51	1400	9.51	180.8	10.82	51.68	57.67	0	28.98
20	51	1500	9.47	173.5	10.65	51.98	53.33	0	28.94
20	51	1600	8.29	181.6	10.27	52.99	49.35	0	28.92
20	51	1700	6.976	186.8	18.51	51.12	52.86	0	28.9
20	51	1800	5.144	186.8	16.47	48.23	60.24	0	28.88
20	51	1900	5.395	142.6	7.78	46.08	65.01	0	28.86

Day	DATE JD	TIME 24H	WS MPH	WD Deg	SIGMA Deg	AT DegF	RH %	RN inch	BP inHg
20	51	2000	8.31	283.6	26.86	42.66	79.1	0	28.86
20	51	2100	7.44	316.7	16.36	38.65	89.4	0	28.85
20	51	2200	4.851	324.8	14.78	37.46	95.9	0	28.85
20	51	2300	3.054	2.762	14.32	36.38	100.3	0.02	28.83
21	52	0	3.548	95.9	15.57	35.24	100.3	0.03	28.82
21	52	100	4.29	84.4	4.43	34.38	100.3	0	28.8
21	52	200	2.209	87.9	0.187	33.44	100.3	0.04	28.8
21	52	300	2.951	87.6	0.205	32.76	100.3	0	28.79
21	52	400	0.222	87.8	0.03	32.51	100.3	0.03	28.78
21	52	500	1.527	84.8	1.149	32.3	100.3	0.03	28.79
21	52	600	2.986	10.45	17.95	32.27	100.3	0	28.8
21	52	700	4.533	317.5	12.47	32.38	100.3	0	28.81
21	52	800	6.049	312.9	14.07	32.62	100.3	0	28.84
21	52	900	6.682	312.9	13.42	32.84	100.3	0	28.87
21	52	1000	9.88	328.6	11.64	32.46	100.3	0	28.9
21	52	1100	10.72	335.5	10.75	31.83	100.3	0	28.93
21	52	1200	11.3	333	11.81	30.87	100.3	0	28.96
21	52	1300	11.27	336.6	10.86	30.17	100.3	0	28.98
21	52	1400	11.61	339.1	12.16	30.34	100.3	0	28.99
21	52	1500	10.38	339.4	11.28	29.93	100.3	0	29
21	52	1600	8.55	328.6	12.22	30.36	100.3	0	29.03
21	52	1700	12.41	314.2	14.39	29.66	100.3	0.02	29.05
21	52	1800	14.15	302.2	15.25	27.11	100.3	0	29.08
21	52	1900	13.92	298.8	15.61	25.43	100.2	0	29.12
21	52	2000	14.87	300.9	16.4	24.49	100	0	29.15
21	52	2100	14.06	295.7	17.32	23.54	98.8	0	29.18
21	52	2200	14.2	293.7	16.09	22.7	99.5	0	29.19
21	52	2300	12.98	289.4	17.92	22.11	98.6	0	29.2
22	53	0	12.91	292.1	17	21.15	100	0	29.2
22	53	100	12.43	297.6	17.36	20.51	100.2	0	29.22
22	53	200	11.12	295.8	16.67	19.56	100.2	0	29.22
22	53	300	10.69	292.1	16.24	18.93	100.2	0	29.24
22	53	400	9.56	287.9	16.12	18.41	100.3	0	29.25
22	53	500	9.73	289.1	16.43	18.37	100.3	0	29.28
22	53	600	9.5	292.9	16.37	17.84	100.2	0	29.3
22	53	700	8.82	291.1	17.11	16.85	100.2	0	29.3
22	53	800	8.57	285	16.02	17.12	99	0	29.31
22	53	900	8.94	288.8	18.92	20.37	87.3	0	29.35
22	53	1000	9.51	279.9	16.51	22.7	81.1	0	29.36
22	53	1100	7.28	270	21.09	25.43	76.3	0	29.37
22	53	1200	5.834	264.4	20.16	27.86	69.72	0	29.36
22	53	1300	4.757	229.6	33.27	30.36	66.67	0	29.33
22	53	1400	5.612	189.1	24.49	29.54	70.8	0	29.31
22	53	1500	6.011	176	23.75	30.41	71.9	0	29.29
22	53	1600	5.835	147.5	21.69	30.13	72.6	0	29.26
22	53	1700	7.21	106.6	13.16	29.21	82.1	0	29.22
22	53	1800	7.45	91.1	8.73	28.34	86.7	0	29.21
22	53	1900	7.53	87.9	7.33	28.47	88.3	0	29.21
22	53	2000	5.267	115.1	14.28	29.1	89	0	29.21
22	53	2100	2.419	131.8	15.67	29.59	88	0	29.21
22	53	2200	0.921	118.7	10.32	29.7	92.8	0	29.2
22	53	2300	3.498	154	6.431	29.91	93.4	0	29.2
23	54	0	5.888	177.6	9.29	31.18	91.3	0	29.2
23	54	100	9.16	185.8	7.44	32.85	79.7	0	29.2
23	54	200	9.04	178.6	8.32	32.8	82	0	29.18
23	54	300	9.56	180.7	7.78	33.08	80	0	29.17
23	54	400	10.37	188.1	8.47	33.56	79.6	0	29.17
23	54	500	8.08	179.8	9.12	33.74	82.4	0	29.17

Day	DATE JD	TIME 24H	WS MPH	WD Deg	SIGMA Deg	AT DegF	RH %	RN inch	BP inHg
23	54	600	10.05	184	7.7	33.88	81.3	0	29.17
23	54	700	9.64	194	8.86	33.08	95.5	0	29.17
23	54	800	7.05	176.3	10.25	33.21	95.4	0	29.17
23	54	900	6.119	167.2	11.99	34.34	87	0	29.17
23	54	1000	5.543	148.9	12.05	35.6	86.3	0	29.15
23	54	1100	5.937	119.8	17.06	36.94	80.4	0	29.13
23	54	1200	5.931	142.6	14.67	38.62	77.6	0	29.12
23	54	1300	6.324	112.8	11.71	37.99	86	0	29.07
23	54	1400	6.666	111	10.39	38.15	100.2	0.03	29.03
23	54	1500	6.462	162	10.92	40.13	100.3	0.01	29.01
23	54	1600	9.08	174.7	8.18	39.07	100.3	0.02	28.99
23	54	1700	8.47	176	8.05	38.71	100.3	0.03	28.97
23	54	1800	10.86	179.4	7.42	38.4	100.3	0	28.97
23	54	1900	12.39	184.1	7.78	38.58	100.3	0	28.96
23	54	2000	12.26	191.2	9.31	39.67	100.3	0	28.95
23	54	2100	13.73	189.3	8.46	40.01	100.3	0.01	28.96
23	54	2200	10.53	184.9	7.27	39.68	100.3	0	28.95
23	54	2300	6.706	223.2	18.77	39.73	100.3	0	28.95
24	55	0	5.58	288.4	19.85	39.26	100.3	0	28.94
24	55	100	4.7	274.9	16.71	37.66	100.3	0	28.92
24	55	200	3.155	205.8	23.5	36.98	100.3	0	28.92
24	55	300	4.142	213.7	12.69	36.48	100.3	0	28.91
24	55	400	8.78	270	15.63	36.78	100.3	0	28.92
24	55	500	9.51	278	15.32	34.39	100.3	0	28.93
24	55	600	11.12	276.3	14.55	32.92	100.3	0.01	28.96
24	55	700	14	295.3	16.91	30.45	100.3	0	28.98
24	55	800	14.62	290.9	18.02	29.11	99.6	0	29.01
24	55	900	16.88	290.9	16.98	26.87	92.7	0	29.05
24	55	1000	19.35	281.8	15.6	27.17	82	0	29.08
24	55	1100	19.08	281.5	15.58	26.98	79.4	0	29.1
24	55	1200	18.27	284.6	17.17	26.85	75.1	0	29.14
24	55	1300	18.94	280	16.35	25.52	76.1	0	29.16
24	55	1400	16.21	280.2	16.45	24.99	74.2	0	29.17
24	55	1500	17.83	276.2	16.18	24.75	73.9	0	29.18
24	55	1600	18.57	276.8	16.4	24.35	76.5	0	29.2
24	55	1700	18.38	272.3	14.08	22.76	90.3	0	29.23
24	55	1800	18.1	282	16.72	20.84	91.7	0	29.26
24	55	1900	18.08	276.7	15.28	20.63	82.3	0	29.29
24	55	2000	17.94	278.6	15.94	20.29	80.5	0	29.31
24	55	2100	16.01	277.7	15.87	19.93	86.1	0	29.33
24	55	2200	15.36	279.1	16.02	19.75	85.1	0	29.34
24	55	2300	11.28	276.3	15.65	19.26	98.3	0	29.35
25	56	0	10.63	295.8	16.9	18.07	100.3	0	29.36
25	56	100	9.04	284.6	17.17	17.6	100.3	0	29.36
25	56	200	10.56	272.7	12.84	18.07	97.6	0	29.35
25	56	300	7.25	276.2	12.99	18.07	91.9	0	29.35
25	56	400	7.64	269.6	12.06	17.98	92.3	0	29.34
25	56	500	8.89	253.2	9.76	19.52	94	0	29.33
25	56	600	9.25	240.1	8.64	19.62	94.3	0	29.34
25	56	700	9.09	237.5	9.24	20.88	96.5	0	29.35
25	56	800	8.67	228.6	11.49	21.37	92.2	0	29.35
25	56	900	12.19	247.5	10.41	25.21	83	0	29.39
25	56	1000	11.73	263	13.07	26.65	78.2	0	29.39
25	56	1100	12.19	272.6	14.09	27.35	75	0	29.39
25	56	1200	12.62	263.3	12.89	28.73	76.4	0	29.38
25	56	1300	11.72	353.3	17.97	25.72	93.8	0	29.36
25	56	1400	12.68	6.331	11.42	23.35	100.3	0	29.35
25	56	1500	13.92	359.8	10.79	21.48	98.5	0	29.37

Day	DATE JD	TIME 24H	WS MPH	WD Deg	SIGMA Deg	AT DegF	RH %	RN inch	BP inHg
25	56	1600	12.33	353.4	11.2	20.14	97.1	0	29.38
25	56	1700	9.94	346.1	11.54	18.14	100.1	0	29.39
25	56	1800	6.948	4.867	10.96	16.79	100.2	0	29.4
25	56	1900	4.234	16.97	7.65	14.8	100.2	0	29.42
25	56	2000	5.202	24.3	7.52	15.1	100.2	0	29.44
25	56	2100	6.103	24.59	9.31	15.21	100.2	0	29.46
25	56	2200	4.786	45.58	6.216	13.56	100.2	0	29.47
25	56	2300	4.307	63.71	8.2	10.42	100.2	0	29.48
26	57	0	4.257	82.6	6.835	9.8	100.2	0	29.49
26	57	100	4.999	81.9	5.168	9.65	100.2	0	29.49
26	57	200	5.471	87.5	3.656	11.3	100.2	0	29.5
26	57	300	5.758	58.19	8.46	12.21	100.2	0	29.5
26	57	400	10.4	26.11	9.16	9.99	100.1	0	29.52
26	57	500	9.92	20.89	9.15	7.63	93.6	0	29.53
26	57	600	9.93	22.29	9.63	6.284	80.9	0	29.55
26	57	700	8.46	15.08	9.3	3.995	81.2	0	29.58
26	57	800	7.93	13.65	9.5	3.314	78.2	0	29.61
26	57	900	5.811	11.53	13.61	6.853 (4)	70.4	0	29.65
26	57	1000	5.025	6.619	21.55	13.78 (4)	62.92	0	29.71
26	57	1100	5.105	12.5	22.86	19.05 (4)	59.44	0	29.74
26	57	1200	7.45	17.69	18.49	20.45	59.81	0	29.75
26	57	1300	8.81	18.34	18.6	21.64	60.72	0	29.72
26	57	1400	10.08	16.21	17.43	21.56	61.18	0	29.71
26	57	1500	9.68	28.52	19.28	22.01	54.61	0	29.71
26	57	1600	9.46	31.35	16.23	21.91	52.06	0	29.71
26	57	1700	8.32	21.16	14.69	20.59	52.8	0	29.7
26	57	1800	8.33	17.37	10.27	17.14	52.7	0	29.69
26	57	1900	6.403	12.42	6.693	13.88	58.56	0	29.69
26	57	2000	5.74	12.55	11.67	13.98	66.66	0	29.68
26	57	2100	5.917	35.21	11.66	16.06	65.8	0	29.67
26	57	2200	3.26	21.15	13.71	16.64	67.65	0	29.67
26	57	2300	2.493	12.73	10.77	16.93	69.99	0	29.65
27	58	0	3.905	32.3	13.34	17.38	75.5	0	29.63
27	58	100	4.075	42.6	12.07	18.41	77.5	0	29.61
27	58	200	4.543	88.6	11.18	20.29	82.2	0	29.59
27	58	300	5.584	168.2	12.32	22.99	81.8	0	29.57
27	58	400	4.325	169.3	13.59	23.41	85.3	0	29.55
27	58	500	7.4	150.6	12.01	26.27	95.5	0	29.54
27	58	600	7.34	146.4	12.16	26.9	100.3	0.05	29.53
27	58	700	15.08	169.6	12.43	27.06	100.3	0.07	29.52
27	58	800	19.66	171.6	10.16	27.83	100.3	0.08	29.51
27	58	900	16.64	170.7	10.77	28.5	100.2	1.46	29.51
27	58	1000	17.19	170.5	10.17	29.51	100.2	0	29.5
27	58	1100	15.54	169.3	11.73	30.91	100.3	0.02	29.49
27	58	1200	19.27	172.5	9.77	32.54	100.3	0.02	29.47
27	58	1300	19.33	173.8	9.04	33.42	100.3	1.44	29.44
27	58	1400	22.15	177.9	8.36	33.92	100.3	0.78	29.41
27	58	1500	18.76	174.2	9.99	34.49	100.3	0.43	29.39
27	58	1600	16.27	177.5	8.84	34.75	100.3	0.46	29.39
27	58	1700	15.82	175.1	9.21	35.2	100.3	0.19	29.37
27	58	1800	14.62	174.3	8.92	35.24	100.3	0.14	29.36
27	58	1900	13.25	179.9	8.36	35.18	100.3	0.06	29.36
27	58	2000	13.43	174.5	9.21	35.32	100.3	0.12	29.35
27	58	2100	13.56	175.1	8.72	35.17	100.3	0.1	29.35
27	58	2200	10.73	172.7	9.41	35.1	100.3	0.07	29.35
27	58	2300	10.51	172.7	9.09	35.14	100.3	0.01	29.33
28	59	0	9.7	175.9	8.56	35.32	100.3	0.03	29.32
28	59	100	9.39	176.1	7.73	35.43	100.3	0.03	29.3

Day	DATE JD	TIME 24H	WS MPH	WD Deg	SIGMA Deg	AT DegF	RH %	RN inch	BP inHg
28	59	200	8.11	173.6	8.48	35.52	100.3	0.07	29.29
28	59	300	7.73	172.5	8.48	35.53	100.3	0.06	29.27
28	59	400	8.16	178	7.76	35.46	100.3	0.06	29.25
28	59	500	6.943	176	8.64	35.53	100.3	0.05	29.24
28	59	600	4.426	182.9	10.01	35.48	100.3	0.06	29.25
28	59	700	4.362	246.3	17.05	35.02	100.3	0.03	29.25
28	59	800	11.19	328.8	10.15	31.33	100.3	0.03	29.27
28	59	900	11.22	331.6	11.64	30.04	100.3	0.04	29.29
28	59	1000	11.85	330.8	10.09	28.22	100.3	0.01	29.31
28	59	1100	9.86	327.3	11.88	27.01	100.3	0.03	29.32
28	59	1200	9.16	324	13.6	27.01	100.2	0	29.33
28	59	1300	9.16	319.9	12.93	27.27	100.3	0	29.33
28	59	1400	9.4	329	12.37	27.39	100.3	0	29.33
28	59	1500	9.16	331.5	13.15	27.14	100.2	0.01	29.34
28	59	1600	10.08	338	11.39	26.5	100.2	0	29.36
28	59	1700	9.72	338.4	11.2	25.7	100.2	0	29.37
28	59	1800	8.29	343.7	11.28	25.23	100.2	0	29.39
28	59	1900	8.12	350.7	10.52	25.12	100.2	0	29.41
28	59	2000	7.09	335.5	12.56	25.49	100.3	0	29.43
28	59	2100	6.437	330.1	13.08	25.5	100.2	0	29.43
28	59	2200	3.908	332.4	15.08	25.75	100.2	0	29.43
28	59	2300	2.922	296.3	14.52	26.01	100.2	0	29.42
01-Mar	60	0	3.252	280.7	16.57	26.26	100.3	0	29.4
1	60	100	3.244	282.6	13.52	26.65	100.3	0	29.4
1	60	200	3.559	311.2	16.49	26.86	100.2	0	29.4
1	60	300	0.916	9.54	0.917	27.04	100.2	0	29.39
1	60	400	3.254	322.8	13.97	27.04	100.2	0	29.39
1	60	500	2.891	356.7	10.62	27.19	100.2	0	29.4
1	60	600	1.918	26.96	1.144	27.15	100.2	0	29.4
1	60	700	1.777	19.13	18.19	27.26	100.2	0	29.41
1	60	800	5.696	312.6	13.74	27.66	100.2	0	29.42
1	60	900	5.848	292.3	17.25	28.37	100.2	0	29.44
1	60	1000	5.131	295.6	20.39	29.59	100.2	0	29.45
1	60	1100	6.579	294.4	19.96	31.24	100.3	0	29.48
1	60	1200	8.64	310.2	16.62	31.38	100.3	0	29.48
1	60	1300	9.66	305.2	16.56	31.57	98	0	29.47
1	60	1400	10.33	297.2	18.48	31.23	88.4	0	29.46
1	60	1500	9.72	310	17.21	31.6	83.6	0	29.45
1	60	1600	9.52	314.1	16.57	31.54	81.7	0	29.45
1	60	1700	8.16	304.4	16.76	31.01	83.1	0	29.46
1	60	1800	7.22	319.9	13.14	29.65	91.9	0	29.46
1	60	1900	6.015	325.2	10.83	27.09	100.3	0	29.47
1	60	2000	8.11	306.4	13.76	26.78	100.2	0	29.48
1	60	2100	5.804	289.6	14.32	26.59	100.2	0	29.49
1	60	2200	5.482	266.5	13.63	25.82	100.2	0	29.5
1	60	2300	6.108	264	11.9	25.77	100.3	0	29.5
2	61	0	8.03	298.1	17.69	26.15	100.3	0	29.52
2	61	100	10.04	295.4	16.32	24.89	91.6	0	29.53
2	61	200	8.59	286.5	18.63	23.79	91.8	0	29.53
2	61	300	9.35	306.8	16.07	22.26	100.3	0	29.54
2	61	400	7.09	295.7	15.83	21.02	100.2	0	29.54
2	61	500	7.68	310.6	14.2	20.33	100.2	0	29.56
2	61	600	8.03	318.2	13.09	20.05	100.2	0	29.58
2	61	700	9.1	322.7	12.26	19.77	100.2	0	29.61
2	61	800	8.53	306.7	14.73	20.98	96	0	29.64
2	61	900	13	315.5	15.13	22.87	77.6	0	29.68
2	61	1000	12.81	316.8	15.11	23.52	68.87	0	29.69
2	61	1100	13.49	313.5	16.77	25.28	65.65	0	29.7

Day	DATE JD	TIME 24H	WS MPH	WD Deg	SIGMA Deg	AT DegF	RH %	RN inch	BP inHg
2	61	1200	14	310.5	21.3	25.3	65.83	0	29.7
2	61	1300	12.11	315.3	19.28	24.46	71.6	0	29.69
2	61	1400	11.91	322.9	16.89	24.48	71.7	0	29.68
2	61	1500	11.05	334.4	16.27	24.04	75.4	0	29.67
2	61	1600	10.14	331.4	15.43	22.89	69.62	0	29.66
2	61	1700	8.51	328.2	15.72	23.1	64.16	0	29.65
2	61	1800	7.58	331.8	15.34	20.89	66.33	0	29.64
2	61	1900	5.105	356.2	10.43	17.89	76	0	29.63
2	61	2000	5.019	22.92	7.76	16.95	86.2	0	29.63
2	61	2100	4.665	26.92	7.34	16.33	90.8	0	29.63
2	61	2200	4.714	55.82	7.05	16.27	94.1	0	29.64
2	61	2300	3.866	72.8	7.21	15.25	100.2	0	29.64
3	62	0	3.518	73.9	12.01	14.47	100.2	0	29.63
3	62	100	4.011	98.7	4.775	13.7	100.2	0	29.63
3	62	200	2.177	47.86	11.52	13.21	100.2	0	29.64
3	62	300	2.648	47.9	12.1	11.95	100	0	29.63
3	62	400	0.948	133.7	5.124	11.26	100.1	0	29.62
3	62	500	2.551	141.6	10.51	10.83	100.2	0	29.63
3	62	600	3.561	166	9.39	10.91	100.1	0	29.64
3	62	700	4.532	195.5	7.95	13.08	100.2	0	29.65
3	62	800	4.007	171.3	10.78	15.69	100.2	0	29.68
3	62	900	7.6	189.1	12.53	19.74	94.6	0	29.72
3	62	1000	7.84	183.6	17.46	22.32	81.5	0	29.73
3	62	1100	7.15	188.3	20.03	24.96	70.2	0	29.74
3	62	1200	7.6	201.3	26.25	27	63.86	0	29.73
3	62	1300	5.746	176.1	38.13	29.41	56.02	0	29.7
3	62	1400	5.055	184.6	69.97	31.89	55.23	0	29.68
3	62	1500	4.133	227.6	37.35	33.67	53.33	0	29.67
3	62	1600	5.372	108.6	40.2	34.96	54.36	0	29.65
3	62	1700	6.381 (1)	81.5	13.97	33.88	59.55	0	29.62
3	62	1800	6.465 (1)	76.2	8.68	30.6	64.85	0	29.6
3	62	1900	6.434 (1)	76.6	5.278	26.84	77.7	0	29.59
3	62	2000	6.72	89.9	7.5	25.66	85.8	0	29.59
3	62	2100	5.067	123.8	9.78	25.14	84.5	0	29.58
3	62	2200	4.782	141.6	7.83	24.49	87	0	29.59
3	62	2300	4.543	152.9	7.36	24.65	93.5	0	29.59
4	63	0	6.126	155.8	7.55	24.16	89.8	0	29.59
4	63	100	7.31	183.7	3.788	24.77	90.1	0	29.58
4	63	200	7.22	187.2	5.141	24.9	96.1	0	29.59
4	63	300	6.688	194.7	7.64	25.2	97.2	0	29.58
4	63	400	3.949	221.3	24.27	24.13	99.2	0	29.58
4	63	500	5.863	11.31	7.22	20.47	100.2	0	29.59
4	63	600	4.42	18.75	6.261	19.96	100.2	0	29.6
4	63	700	1.844	53.05	13.86	20.8	100.3	0	29.62
4	63	800	3.594	25.57	8.99	23.39	98.9	0	29.64
4	63	900	3.859	3.736	17.47	27.92 (4)	83.9	0	29.68
4	63	1000	2.572	358.5	27.83	34.85 (4)	71.2	0	29.73
4	63	1100	4.173	248.7	24.9	34.44	75.6	0	29.72
4	63	1200	4.386	255.1	30.74	38.87	66.44	0	29.74
4	63	1300	5.17	246.5	24.6	39.65	67.33	0	29.73
4	63	1400	5.188	359.6	32.31	38.95	69.73	0	29.71
4	63	1500	6.194	52.17	18.7	41.37	68.41	0	29.69
4	63	1600	6.65	69.34	17.89	42.52	64.91	0	29.69
4	63	1700	6.22	56.89	15.61	41.04	64.61	0	29.68
4	63	1800	6.201	19.22	8.87	36.77 (4)	71.3	0	29.67
4	63	1900	7.28	6.289	6.472	31.69 (4)	85.5	0	29.67
4	63	2000	8.23	358.1	6.872	28.65	96.2	0	29.68
4	63	2100	7.39	354.6	6.968	26.28	100.2	0	29.68

Day	DATE JD	TIME 24H	WS MPH	WD Deg	SIGMA Deg	AT DegF	RH %	RN inch	BP inHg
4	63	2200	3.13	354.1	6.882	25.43	100.2	0	29.69
4	63	2300	0.928	283.6	14.78	25.1	100.3	0	29.69
5	64	0	0.367	119.9	7.16	24.87	100.3	0	29.67
5	64	100	1.799	161.1	12.45	23.43	100.3	0	29.65
5	64	200	0.737	140.2	8.29	24.48	100.3	0	29.65
5	64	300	3.84	162.5	7.57	23.79	100.3	0	29.65
5	64	400	4.41	191.1	13.58	22.62	100.3	0	29.64
5	64	500	5.217	143	10.68	23.84	100.2	0	29.64
5	64	600	4.725	147.7	9.77	24.37	100.3	0	29.63
5	64	700	5.352	157.8	9.04	24.05	100.3	0	29.64
5	64	800	5.929	139.5	8.77	27.27 (4)	100.3	0	29.64
5	64	900	5.606	147.1	12.3	32.64 (4)	100.3	0	29.65
5	64	1000	9.28	156.7	15.37	36.05	97.9	0	29.64
5	64	1100	11.54	121.8	14.12	37.68	97.8	0	29.62
5	64	1200	13.34	116.2	13.49	39.18	92.9	0	29.57
5	64	1300	14.04	131.6	12.05	40.14	87.4	0	29.52
5	64	1400	14.45	152.6	12.75	42.18	80.3	0	29.48
5	64	1500	12.83	159.3	13.52	43.13	78.1	0	29.46
5	64	1600	11.62	155.1	12.77	42.89	78.8	0	29.43
5	64	1700	11.53	147.2	10.87	42.25	80.7	0	29.4
5	64	1800	11.93	153.5	11.92	41.64	81.5	0	29.38
5	64	1900	12.74	163.5	12.03	41.13	83.9	0	29.37
5	64	2000	15.53	165.8	11.71	39.68	94.8	0	29.35
5	64	2100	17.68	173.4	9.88	38.91	99.5	0.06	29.34
5	64	2200	15.39	175.5	7.95	37.76	100.3	0.12	29.33
5	64	2300	16.42	178	7.4	37.75	100.3	0	29.32
6	65	0	17.46	177.4	7.98	37.9	100.3	0	29.3
6	65	100	14.04	175.7	9.21	38.43	100.2	0.02	29.29
6	65	200	13.59	169.7	10.74	39.27	100.3	0	29.28
6	65	300	12.8	170.8	10.17	39.71	100.3	0	29.27
6	65	400	13.56	175.3	8.92	39.94	100.3	0	29.25
6	65	500	14.61	179.8	7.53	39.99	100.3	0	29.25
6	65	600	14.58	184.3	6.995	39.8	100.3	0	29.25
6	65	700	15.02	182.9	6.804	39.48	100.3	0	29.26
6	65	800	14.56	185.6	7.94	39.75	100.3	0	29.27
6	65	900	14.37	190	8.12	41.32	100.3	0	29.3
6	65	1000	7.45	205.6	9.8	42.36	100.3	0	29.33
6	65	1100	6.387	216.5	9.69	44.1	100.3	0	29.35
6	65	1200	6.648	225.4	18.58	46.46	99.7	0	29.38
6	65	1300	6.756	273.8	26.65	50.09	91.1	0	29.42
6	65	1400	9.41	320.1	17.99	50.25 (4)	88	0	29.43
6	65	1500	14.61	332.1	12.1	45.18 (4)	99.9	0	29.43
6	65	1600	11.27	329.2	14.67	44.15	97.8	0	29.44
6	65	1700	10.24	345.5	12.05	42.32	99.4	0	29.45
6	65	1800	8.47	358.2	8.52	39.32	100.3	0	29.44
6	65	1900	6.976	355.9	9.66	38	100.3	0	29.46
6	65	2000	4.914	10.39	8.82	37.39	100.3	0	29.49
6	65	2100	3.808	45.77	11.11	36.75	100.3	0	29.48
6	65	2200	4.799	76.8	9.09	36.67	100.3	0	29.48
6	65	2300	4.906	49.55	7.39	36.54	100.3	0	29.45
7	66	0	3.321	33.5	14.6	35.89	100.3	0	29.44
7	66	100	3.665	55.59	14.65	35.83	100.3	0	29.43
7	66	200	5.131	113.7	13.85	36.15	100.3	0	29.41
7	66	300	4.405	168.9	33.94	36.32	100.3	0	29.38
7	66	400	6.318	156.2	12.6	36.84	100.3	0.04	29.34
7	66	500	8.41	158.4	11.99	39.3	100.3	0.02	29.32
7	66	600	13.54	170.5	10.37	43.33	100.3	0	29.32
7	66	700	15.37	183.4	8.6	44.82	100.3	0	29.32

Day	DATE JD	TIME 24H	WS MPH	WD Deg	SIGMA Deg	AT DegF	RH %	RN inch	BP inHg
7	66	800	15.43	181.1	7.89	47.15	100.3	0	29.33
7	66	900	17.71	176.4	7.87	48.55	100.3	0	29.32
7	66	1000	17.28	177.2	9.09	50.13	100.3	0	29.31
7	66	1100	18.73	178.3	8.46	49.39	100.3	0.45	29.3
7	66	1200	19.87	178.9	7.94	50.46	100.3	0.9	29.29
7	66	1300	22.57	180	7.84	52.47	100.3	5.18	29.27
7	66	1400	22.09	185	8.4	55.02	100.3	1.88	29.25
7	66	1500	23.9	178.5	9.09	56.6	99.4	0.02	29.24
7	66	1600	23.08	178.3	8.16	55.82	99.9	0	29.23
7	66	1700	22.42	177.4	7.44	53.6	100.3	0	29.23
7	66	1800	21.63	177.9	7.33	52.29	100.3	0.01	29.2
7	66	1900	16.98	178	9.52	52.57	100.3	0.1	29.16
7	66	2000	15.55	187.1	10.75	51.05	100.3	0	29.14
7	66	2100	15.91	187.9	10.78	51.2	100.3	0	29.13
7	66	2200	19.32	182.2	9.12	51.29	100.3	0.03	29.1
7	66	2300	20.04	180.6	8.72	53.2	100.3	0.05	29.07
8	67	0	22.5	186.1	8.41	55.61	100.3	0.07	29.05
8	67	100	20.88	193.1	9.89	55.88	100.3	0	29.05
8	67	200	17.21	189.5	9.24	55.45	100.3	0	29.06
8	67	300	14.08	186.2	9.21	54.51	100.3	0.01	29.05
8	67	400	14.36	259.9	15.65	52.16 (4)	100.3	0	29.06
8	67	500	13.99	333.5	13.55	41.09 (4)	100.3	0	29.08
8	67	600	12.41	332.2	12.81	38.2	100.3	0.03	29.1
8	67	700	11.8	322.8	12.04	35.98	100.3	0.04	29.15
8	67	800	10.74	322.2	14.61	34.42	100.2	0.07	29.17
8	67	900	10.11	329.9	12.66	32.48	100.3	0.07	29.2
8	67	1000	8.85	315.8	13.77	31.75	100.3	0.06	29.22
8	67	1100	7.92	304	14.74	31.6	100.3	0.06	29.24
8	67	1200	8.82	319.8	14.61	30.73	100.3	0.08	29.26
8	67	1300	9.77	328.6	14.32	28.81	100.3	0.05	29.27
8	67	1400	10.42	325	12.38	27.04	100.3	0.07	29.28
8	67	1500	8.88	327.6	13.85	26.26	100.2	0.03	29.28
8	67	1600	9.72	320.1	12.76	25.58	100.2	0	29.29
8	67	1700	10.62	318.3	14.09	23.63	100.2	0.03	29.29
8	67	1800	8.89	309	14.09	22.93	100.3	0.03	29.3
8	67	1900	8.61	326.6	12.17	22.45	100.3	0.05	29.31
8	67	2000	10.88	317.5	14.19	21.52	100.3	0.06	29.31
8	67	2100	9.88	312.3	14.52	20.74	100.2	0.01	29.3
8	67	2200	9.79	306.3	14.82	20.19	100.2	0.03	29.32
8	67	2300	11.12	302.4	15.51	19.84	100.2	0.05	29.31
9	68	0	11.02	295.2	16.56	19.54	100.2	0	29.31
9	68	100	11.3	291	16.79	19.17	100.2	0	29.31
9	68	200	11.67	292	16.33	18.75	100.2	0	29.32
9	68	300	11.32	311.9	13.44	18.15	100.3	0	29.33
9	68	400	10.29	303.7	14.99	17.62	100.3	0	29.33
9	68	500	10.61	318.4	12.92	17.27	100.2	0	29.34
9	68	600	10.03	320.6	13.23	16.49	100.2	0	29.36
9	68	700	12.83	304.5	14.68	15.5	100.2	0	29.38
9	68	800	12.89	301.7	16.23	14.94	100.2	0	29.41
9	68	900	13.12	300.8	17.67	15.46	97.6	0	29.45
9	68	1000	14.3	296.6	17	16.32	91.7	0	29.47
9	68	1100	14.46	296.9	17.87	17.51	86.4	0	29.49
9	68	1200	15.05	304.2	16.19	18.62	85.3	0	29.5
9	68	1300	15.75	300.5	16.55	19.73	88.4	0	29.5
9	68	1400	14.6	297.4	15.4	19.14	90.5	0	29.5
9	68	1500	15.89	296.8	17.53	21.16	81.3	0	29.51
9	68	1600	14.89	301.8	18.2	22.37	73.3	0	29.54
9	68	1700	16.24	310.1	14.44	21.3	74.6	0	29.55

Day	DATE JD	TIME 24H	WS MPH	WD Deg	SIGMA Deg	AT DegF	RH %	RN inch	BP inHg
9	68	1800	16.15	308.8	13.84	19.46	78.4	0	29.56
9	68	1900	13.74	309.7	13.22	17.91	85.1	0	29.57
9	68	2000	14.16	301.5	15.08	17.42	85.3	0	29.59
9	68	2100	13.11	294.6	16.61	16.99	84.7	0	29.6
9	68	2200	12.24	293.6	16.91	16.63	86.7	0	29.6
9	68	2300	10.71	290.6	17.51	15.97	91.1	0	29.61
10	69	0	10.66	289	16.62	15.68	93.4	0	29.6
10	69	100	10.77	279.7	15.24	14.79	96.9	0	29.61
10	69	200	10.02	280.4	16.05	14.5	97.1	0	29.63
10	69	300	10.55	285.1	15.65	14.59	94.8	0	29.64
10	69	400	9.29	285.4	15.78	13.79	94.6	0	29.64
10	69	500	7.41	305.7	16.62	12.64	96.2	0	29.66
10	69	600	6.759	346.9	12.61	10.08	99.8	0	29.67
10	69	700	4.325	339.6	12.93	7.66 (4)	100.1	0	29.7
10	69	800	5.357	326.1	12.63	13.88 (4)	91.4	0	29.73
10	69	900	8.17	301.7	16.45	17.86	78.6	0	29.77
10	69	1000	9.13	296.1	19.01	20.46	70.1	0	29.78
10	69	1100	9.74	310.4	18.12	21.98	60.29	0	29.79
10	69	1200	8.17	302.6	20.31	24.46	57.49	0	29.78
10	69	1300	8.08	307.1	26.99	26.32	55.78	0	29.76
10	69	1400	7	302.6	28.93	28.05	54.31	0	29.77
10	69	1500	6.106	349.7	21.69	28.25	53.17	0	29.75
10	69	1600	3.469	354.4	48.37	30.39	46.61	0	29.74
10	69	1700	3.441	81.9	40.51	30.17 (4)	49.74	0	29.71
10	69	1800	5.558	84.6	9.82	23.91 (4)	67.19	0	29.65
10	69	1900	6.105	88.9	8.17	23.02	71.3	0	29.63
10	69	2000	5.508	95.6	8.77	23.35	72.9	0	29.62
10	69	2100	6.607	96.7	8.29	23.72	74	0	29.62
10	69	2200	6.755	111.9	9.44	23.98	72.7	0	29.62
10	69	2300	5.994	115	9.79	24.11	73.2	0	29.61
11	70	0	5.554	107.4	8.72	23.14	77.1	0	29.61
11	70	100	5.785	112.1	9.04	22.34	81	0	29.6
11	70	200	5.799	134.5	6.749	22.92	76.3	0	29.59
11	70	300	5.578	145.9	7.28	23.31	83.9	0	29.58
11	70	400	6.25	170	8.82	26.18	86.1	0	29.58
11	70	500	8.96	178.3	7.94	27.94	86.4	0	29.57
11	70	600	9.23	177.3	7.94	28.62	88.4	0	29.57
11	70	700	10.03	181.4	6.956	29.31	89.6	0	29.58
11	70	800	9.91	177.2	8.27	29.92	89.1	0	29.6
11	70	900	11.66	178.5	7.75	31.19	85.8	0	29.6
11	70	1000	12.25	176.3	8.04	33.58	84.3	0	29.59
11	70	1100	11.29	177.5	7.4	36.69	76.6	0	29.59
11	70	1200	9.79	181.9	8.82	39.62	68.85	0	29.6
11	70	1300	9.24	182.1	7.67	41.96	64.59	0	29.59
11	70	1400	7.63	162.2	17.78	45.03	61.49	0	29.56
11	70	1500	9.53	179	8.44	44.67	65.31	0	29.53
11	70	1600	10.03	176.6	8.28	46.05	66.34	0	29.51
11	70	1700	6.822	163.9	12.97	48.76	60.1	0	29.5
11	70	1800	7.07	105.3	12.67	46.74 (4)	67.51	0	29.51
11	70	1900	9.16	103.7	7.14	41.18 (4)	78.5	0	29.52
11	70	2000	5.456	140.4	9.08	41.31	78.6	0	29.52
11	70	2100	9.57	175.3	8.74	41.78	78.7	0	29.53
11	70	2200	11.73	181.4	6.83	40.81	85.5	0	29.53
11	70	2300	13.06	185	7.51	40.46	86.5	0	29.55
12	71	0	13.39	179.2	7.21	40.51	83.7	0	29.55
12	71	100	12.25	182.4	7.06	40.28	84.2	0	29.55
12	71	200	13.96	178.1	7.1	41.12	80.5	0	29.56
12	71	300	13.37	177	7.46	40.57	80.8	0	29.57

Day	DATE JD	TIME 24H	WS MPH	WD Deg	SIGMA Deg	AT DegF	RH %	RN inch	BP inHg
12	71	400	13.34	173.5	8.79	40.5	80.8	0	29.58
12	71	500	11.51	168.6	10.43	39.67	83.4	0	29.6
12	71	600	10.97	170.3	10.51	38.71	88.9	0	29.62
12	71	700	11.42	168.2	10.9	38.44	91.3	0	29.63
12	71	800	12.81	173.9	9.46	39.47	87.1	0	29.65
12	71	900	13.33	175.4	8.69	42.16	81.5	0	29.68
12	71	1000	13.38	171.9	9.63	46.12	72.3	0	29.7
12	71	1100	12.91	172.4	9.62	50.18	66.54	0	29.72
12	71	1200	13.71	175.5	7.71	53.82	62.34	0	29.71
12	71	1300	13.04	177.3	8.07	56.8	59.65	0	29.7
12	71	1400	12.49	179.6	9.03	60.43	54.16	0	29.68
12	71	1500	13.4	181	8.1	62.08	51.12	0	29.67
12	71	1600	12.56	181.1	8.58	63.26	49.15	0	29.66
12	71	1700	11.76	183.6	7.53	62.13 (4)	50.18	0	29.65
12	71	1800	10.59	184.2	6.756	56.53 (4)	58.71	0	29.64
12	71	1900	8.64	182.3	6.645	50.73 (4)	69.49	0	29.62
12	71	2000	9.28	187.4	6.739	50.05	70.1	0	29.63
12	71	2100	8.2	195.6	10.59	48.07	75.1	0	29.65
12	71	2200	8.21	176.7	6.285	46.48	78.5	0	29.66
12	71	2300	10.61	176.3	6.838	47.01	76.7	0	29.67
13	72	0	10.21	172.7	8.32	46.65	76.6	0	29.67
13	72	100	9.28	165.4	10.55	45.79	77.7	0	29.67
13	72	200	9.56	168.8	8.61	44.82	80.4	0	29.67
13	72	300	9	176.5	6.733	42.92	86.3	0	29.67
13	72	400	8.71	177.9	6.317	41.18	91.9	0	29.68
13	72	500	8.39	181.5	6.059	39.77	96.7	0	29.69
13	72	600	9.24	181.9	5.849	39.15	99.3	0	29.7
13	72	700	9.72	185.9	5.636	38.67	100.3	0	29.71
13	72	800	11.54	188.6	6.759	40.5	98.5	0	29.73
13	72	900	12.26	185.6	7.42	44.74	87.3	0	29.75
13	72	1000	13.06	184.8	7.28	49.49 (4)	76.5	0	29.76
13	72	1100	9.76	189.2	7.29	55.57 (4)	64.45	0	29.76
13	72	1200	5.426	200.5	28.51	63.05 (4)	51.5	0	29.77
13	72	1300	4.767	5.141	48.14	67.4	45.87	0	29.76
13	72	1400	4.253	290.2	61.72	68.87	43.34	0	29.74
13	72	1500	6.009	327.3	24.34	69.32	42.95	0	29.72
13	72	1600	6.606	334	20.25	68.22	43.18	0	29.71
13	72	1700	7.46	335.6	15.75	67.31 (4)	43.96	0	29.7
13	72	1800	7.8	11.55	8.12	62.08 (4)	56.85	0	29.69
13	72	1900	6.577	35.3	5.768	55.16 (4)	65.39	0	29.68
13	72	2000	6.638	37.45	5.881	52.21	67.37	0	29.68
13	72	2100	3.821	54.82	2.909	47.41	79.7	0	29.67
13	72	2200	0.628	59	0.119	43.51	91.3	0	29.66
13	72	2300	3.739	145	31.54	42.7	93.7	0	29.66
14	73	0	6.859	180.4	4.826	42.18	98.4	0	29.65
14	73	100	7.02	186.6	4.837	42.03	99.8	0	29.65
14	73	200	7.2	184.3	4.447	38.87	100.3	0	29.63
14	73	300	6.646	185.7	5.923	37.05	100.3	0	29.61
14	73	400	8.52	178.4	6.269	37.64	100.2	0	29.62
14	73	500	7.24	181.9	7.57	36.82	100.2	0	29.62
14	73	600	8.88	178.4	6.458	36.61	100.2	0	29.63
14	73	700	9.1	179.8	6.595	36.64	100.2	0	29.65
14	73	800	8.71	182.8	6.966	38.67 (4)	100.3	0	29.68
14	73	900	8.25	180.7	7.29	43.84 (4)	94.7	0	29.72
14	73	1000	7.15	186.9	9.35	49.3 (4)	80.7	0	29.75
14	73	1100	3.77	181.6	50.85	57.48 (4)	62.22	0	29.76
14	73	1200	3.875	316.2	29.07	63.91 (4)	50.93	0	29.76
14	73	1300	5.911	311.9	30.79	65.73	53.49	0	29.74

Day	DATE JD	TIME 24H	WS MPH	WD Deg	SIGMA Deg	AT DegF	RH %	RN inch	BP inHg
14	73	1400	6.21	325.9	32.73	67.09	50.44	0	29.72
14	73	1500	7.04	2.229	28.92	67.5	45.87	0	29.7
14	73	1600	6.075	321.2	36.17	67.87	45.49	0	29.68
14	73	1700	6.167	311.9	16.96	66.74	45.04	0	29.67
14	73	1800	4.167	344.6	17.63	63.8 (4)	49.7	0	29.65
14	73	1900	5.427	69.5	6.917	55.45 (4)	69.78	0	29.63
14	73	2000	4.204	20.07	8.51	50.55	79.2	0	29.6
14	73	2100	3.209	4.859	19.07	49.25	81.8	0	29.58
14	73	2200	0.814	333.6	3.891	44.75	97.8	0	29.56
14	73	2300	3.256	15.09	22.47	43.08	99.5	0	29.55
15	74	0	5.015	175.1	8.15	42.73	100.3	0	29.54
15	74	100	7.14	179.6	5.571	42.57	100.3	0	29.52
15	74	200	7.04	184	5.03	41	100.3	0	29.52
15	74	300	8.11	180.2	5.656	40.67	100.3	0	29.5
15	74	400	7	186	5.065	38.93	100.3	0	29.49
15	74	500	7.61	181.1	6.286	38.92	100.3	0	29.48
15	74	600	8.81	184.2	6.375	38.22	100.3	0	29.47
15	74	700	8.67	184.7	6.595	38.06	100.3	0	29.48
15	74	800	9.93	185.1	6.823	40.69	100.3	0	29.5
15	74	900	8.39	180.4	9.17	45.41 (4)	97.2	0	29.51
15	74	1000	5.775	191.9	8.81	52.49 (4)	80.8	0	29.53
15	74	1100	4.803	294.5	31.3	60.27 (4)	69.53	0	29.54
15	74	1200	6.769	325	19.49	63.01	67.35	0	29.52
15	74	1300	8.34	327.4	20.7	65.19	65.48	0	29.49
15	74	1400	8.74	325.1	19.83	67.17	62.64	0	29.47
15	74	1500	8.08	327.4	22.3	68.25	60.85	0	29.45
15	74	1600	9.19	324.4	16.23	67.99	61.11	0	29.43
15	74	1700	8.97	322.3	16.79	67.05	62.13	0	29.42
15	74	1800	6.515	324.4	10.2	63.87 (4)	68.23	0	29.41
15	74	1900	5.208	333.1	7.73	58.42 (4)	77.2	0	29.4
15	74	2000	3.519	4.24	5.695	53.33 (4)	90.6	0	29.38
15	74	2100	2.486	8.3	6.962	50.8	97.3	0	29.36
15	74	2200	3.076	138.6	21.78	48.01	100	0	29.35
15	74	2300	4.094	164.1	9.37	48.49	100.3	0	29.34
16	75	0	3.938	175.7	8.77	45.28	100.3	0	29.33
16	75	100	6.089	186.2	7.2	45.47	100.3	0	29.31
16	75	200	6.203	181.4	11.91	44.22	100.3	0	29.32
16	75	300	5.353	183	9.94	43.92	100.3	0	29.31
16	75	400	6.478	175.8	8.95	43.46	100.3	0	29.31
16	75	500	6.294	180.2	7.65	42.2	100.3	0	29.31
16	75	600	6.37	184.2	11.85	41.09	100.3	0	29.31
16	75	700	4.026	186.6	23.14	42.11	100.3	0	29.34
16	75	800	2.017	250.4	19.35	45.42	100.3	0	29.35
16	75	900	4.319	184.7	36.5	45.7	100.3	0	29.36
16	75	1000	3.191	161.3	27.65	48.86	99.6	0	29.37
16	75	1100	4.079	203.4	29.63	53.74 (4)	93.6	0	29.4
16	75	1200	4.098	246.2	43.2	60.35 (4)	82.5	0	29.41
16	75	1300	5.581	324.6	26.95	62.07	83	0	29.38
16	75	1400	5.741	345.2	36.42	62.61	80.6	0	29.36
16	75	1500	6.234	323.8	33.31	64.24	71.2	0	29.35
16	75	1600	8.14	333.3	16.31	63.62	65.38	0	29.33
16	75	1700	6.98	352.8	25.25	62.26	68.87	0	29.32
16	75	1800	8.62	3.603	9.68	57.8 (4)	88.7	0	29.31
16	75	1900	6.51	7.72	7.14	51.98 (4)	99.4	0	29.3
16	75	2000	5.589	35.55	5.677	48.99	100.3	0	29.3
16	75	2100	4.774	93.4	13.27	46.34	100.3	0	29.29
16	75	2200	2.743	159.4	10.77	43.93	100.3	0	29.29
16	75	2300	3.51	177.1	34.53	44.01	100.3	0	29.28

Day	DATE JD	TIME 24H	WS MPH	WD Deg	SIGMA Deg	AT DegF	RH %	RN inch	BP inHg
17	76	0	2.673	253.3	31.96	41.63	100.3	0	29.28
17	76	100	2.526	37.27	19.95	39.96	100.3	0	29.27
17	76	200	5.913	337.9	13.6	41.49	100.3	0	29.27
17	76	300	5.597	341.8	15.62	42.75	100.3	0	29.28
17	76	400	4.799	8.15	17.83	42.19	100.3	0	29.26
17	76	500	3.213	329	15.95	41.49	100.3	0	29.26
17	76	600	1.775	354.3	12.45	41.38	100.3	0	29.26
17	76	700	1.537	356.8	14.23	41.36	100.3	0	29.26
17	76	800	3.282	336.4	14.32	41.92	100.3	0	29.26
17	76	900	8.1	328.4	11.88	41.69	100.3	0	29.28
17	76	1000	7.66	318.4	16.31	41.65	100.1	0	29.29
17	76	1100	7.25	299.5	20.8	42.91	94.5	0	29.3
17	76	1200	10.3	308	18.36	43.87	88.4	0	29.31
17	76	1300	13.53	297.2	16.52	44.81	88.5	0	29.32
17	76	1400	12.88	293.2	16.4	41.62	98.4	0	29.33
17	76	1500	10.82	298.8	16.48	38.59	100.3	0	29.32
17	76	1600	12.11	313	14.38	37.58	100.3	0.02	29.34
17	76	1700	11.77	318.8	13	36.26	100.3	0	29.35
17	76	1800	9.7	322.8	12.91	35.98	100.3	0.02	29.37
17	76	1900	10.34	319.2	12.26	36.55	100.2	0	29.39
17	76	2000	9.7	308.1	14.32	36.4	100.2	0	29.41
17	76	2100	9.35	309.7	13.5	35.63	100.2	0	29.42
17	76	2200	9.68	303.6	15.44	34.51	100.2	0	29.43
17	76	2300	9.75	309.3	15.28	33.72	100.3	0	29.43
18	77	0	8.16	316.3	12.83	32.73	100.3	0	29.43
18	77	100	7.37	318.3	12.18	31.74	100.2	0	29.42
18	77	200	6.925	314.2	12.46	31.23	100.3	0	29.42
18	77	300	7.15	314.1	13.09	30.62	100.3	0	29.42
18	77	400	6.702	318.4	12.19	30.1	100.3	0	29.42
18	77	500	6.793	316.5	12.64	29.57	100.3	0	29.43
18	77	600	6.083	322.5	10.87	28.97	100.2	0	29.44
18	77	700	4.979	311.3	14.08	28.9	100.2	0	29.45
18	77	800	5.941	322.9	14.05	30.68	100.3	0	29.46
18	77	900	6.774	318	14.83	31.97	100.3	0	29.48
18	77	1000	7.72	320.8	13.39	33.48	100.3	0	29.5
18	77	1100	8.2	313.7	16.1	34.67	100.1	0	29.51
18	77	1200	8.6	314.7	17.72	36.21	96.9	0	29.52
18	77	1300	7.63	306.8	17.57	37.47	93.8	0	29.52
18	77	1400	6.44	319.1	19.66	39.12	92.6	0	29.5
18	77	1500	6.437	309	23.82	40.64	90.9	0	29.48
18	77	1600	6.097	314.6	18.27	40.4	91.2	0	29.46
18	77	1700	4.919	306.1	20.48	40.02	91.5	0	29.44
18	77	1800	4.463	322.4	23.3	39.74	91.1	0	29.43
18	77	1900	2.194	311.6	11.55	37.8	95.1	0	29.42
18	77	2000	1.514	134	19.42	33.57	100.3	0	29.41
18	77	2100	1.75	158.3	11.13	31.51	100.3	0	29.41
18	77	2200	3.391	157.9	9.07	29.91	100.3	0	29.4
18	77	2300	4.035	152.6	8.77	30.81	100.3	0	29.4
19	78	0	3.599 (1)	176.5	8.86	28.84	100.3	0	29.39
19	78	100	3.525 (1)	175.7	8.48	29.81	100.2	0	29.38
19	78	200	3.462 (1)	188.9	7.5	29.75	100.2	0	29.38
19	78	300	3.311	151.1	12.39	28.8	100.2	0	29.38
19	78	400	2.382	149	9.85	26.79	100.2	0	29.36
19	78	500	3.204	164.3	14	27.35	100.2	0	29.37
19	78	600	3.998	169	8.06	28.33	100.2	0	29.37
19	78	700	4.219	166.9	9.01	28.53	100.2	0	29.38
19	78	800	5.553	173.9	11.87	30.51 (4)	100.3	0	29.39
19	78	900	7.24	174	14.84	35.85 (4)	100.3	0	29.41

Day	DATE JD	TIME 24H	WS MPH	WD Deg	SIGMA Deg	AT DegF	RH %	RN inch	BP inHg
19	78	1000	9.68	183.3	11.4	40.22	94.7	0	29.42
19	78	1100	10.37	180.5	13.68	44.66	84	0	29.41
19	78	1200	11.25	185.1	11.62	48.83	73.5	0	29.39
19	78	1300	10.83	192	11.2	51.78	65.72	0	29.37
19	78	1400	9.94	189.3	13.62	53.62	62.03	0	29.35
19	78	1500	10.25	182	10.6	54.97	59.3	0	29.33
19	78	1600	11.1	180.4	9.28	54.73	59.41	0	29.31
19	78	1700	9.94	183.3	8.16	53.65	60.86	0	29.29
19	78	1800	7.9	168.3	10.37	53.07	60.05	0	29.27
19	78	1900	8.1	144.5	10.05	51.93	62.72	0	29.26
19	78	2000	9.19	135.3	10.17	51.1	65.41	0	29.25
19	78	2100	9.26	137.9	9.28	49.9	69.29	0	29.25
19	78	2200	8.77	151.8	11.69	49.34	68.77	0	29.24
19	78	2300	12.41	167.1	11.46	49.54	67.78	0	29.24
20	79	0	14.16	172	9.51	48.83	70.4	0	29.23
20	79	100	13.76	172.5	9.92	48.21	72.3	0	29.23
20	79	200	14.81	169.3	10.78	47.45	74.7	0	29.22
20	79	300	15.91	172.9	9.47	46.51	80.9	0	29.2
20	79	400	13.7	170.1	10.6	45.1	91.5	0	29.18
20	79	500	13.42	171.7	10.08	43.44	100.3	0	29.16
20	79	600	12.66	170.8	10.73	43.63	100	0	29.15
20	79	700	16.72	173.5	9.79	43.81	99	0.02	29.14
20	79	800	18.91	173.8	9.64	44	95.3	0	29.13
20	79	900	21.68	175	9.79	44.84	91	0	29.12
20	79	1000	22.39	175.8	9.28	45.88	88.1	0	29.1
20	79	1100	23.26	174.1	9.74	49.27	80.9	0	29.1
20	79	1200	21.08	175.6	10.01	52.82	74.9	0	29.09
20	79	1300	22.94	176.3	9.51	54.67	72.1	0	29.06
20	79	1400	23.34	179.9	8.67	55.9	71.2	0	29.04
20	79	1500	20.43	177.8	9.38	52.37	79.2	0	29.02
20	79	1600	17.86	171.9	10.7	51.74	81.3	0	28.99
20	79	1700	15.56	163.8	12.4	49.72	92.9	0	28.95
20	79	1800	17.73	175.1	9.42	48.86	97	0	28.92
20	79	1900	18.17	180	6.719	46.73	100.3	0	28.91
20	79	2000	18.45	177.7	8.09	47.57	100.3	0	28.91
20	79	2100	15.43	174.5	8.73	47.44	100.3	0	28.89
20	79	2200	12.89	167.8	10.43	48.07	98.6	0	28.87
20	79	2300	16	175.3	8.76	49.31	94.5	0	28.87
21	80	0	10.6	170.7	11.11	49.44	92.6	0	28.87
21	80	100	10.01	164.5	12.13	50.13	89.8	0	28.84
21	80	200	11.92	178.1	7.5	47.41	99.3	0	28.82
21	80	300	12.09	178.5	10.12	48.84	100.2	0.17	28.78
21	80	400	11.84	185.6	8.14	46.89	100.3	0.01	28.75
21	80	500	10.85	179.9	7.93	48.2	100.3	0	28.73
21	80	600	10.56	178.8	8.09	48.57	100.3	0.07	28.73
21	80	700	10.85	190.7	10.55	47.01	100.3	0.09	28.74
21	80	800	7.1	273.4	24.36	46.7	100.3	0.16	28.74
21	80	900	3.195	282.8	18.23	46.78	100.3	0.03	28.76
21	80	1000	5.588	214.9	10.93	47.56	100.3	0	28.76
21	80	1100	11.54	263.2	11.37	48.75	98.9	0	28.76
21	80	1200	12.65	264.1	12.23	49.72	93.8	0	28.78
21	80	1300	15.44	249.8	11.16	48.67	89.4	0	28.78
21	80	1400	12.92	267.1	12.32	46.46	91.9	0	28.77
21	80	1500	15.84	263	9.67	45.51	93.2	0	28.78
21	80	1600	13.34	270.5	12.13	45.24	90.8	0	28.8
21	80	1700	13.93	257.9	11.09	45.25	87.7	0	28.81
21	80	1800	12.03	271.5	12.6	43.17	95.5	0	28.81
21	80	1900	12.2	262.9	11.13	42.32	93.7	0	28.81

Day	DATE JD	TIME 24H	WS MPH	WD Deg	SIGMA Deg	AT DegF	RH %	RN inch	BP inHg
21	80	2000	10.19	254.3	10.09	41.36	88.9	0	28.81
21	80	2100	9.02	249.1	11.57	40.28	91.8	0	28.8
21	80	2200	14.35	253.3	9.48	41.32	84.3	0	28.81
21	80	2300	11.96	245	10.01	40.53	82.6	0	28.79
22	81	0	8.73	237.1	9.2	39.99	83.2	0	28.78
22	81	100	6.007	222.3	9.61	39.16	87	0	28.75
22	81	200	7.15	217.2	10.3	39.12	87.2	0	28.73
22	81	300	7.98	220.2	9.8	39.01	88.9	0	28.72
22	81	400	6.933	224.2	10.74	38.74	91.1	0	28.71
22	81	500	7.47	225.8	11.2	38.02	96.8	0	28.7
22	81	600	7.21	201.8	10.5	36.54	100.3	0	28.69
22	81	700	7.04	220.3	10.98	35.58	100.2	0.03	28.7
22	81	800	6.552	201.2	9.53	35.63	100.2	0.01	28.7
22	81	900	6.964	210.1	10.7	36.49	100.2	0.03	28.71
22	81	1000	8.09	235.6	12.52	37.17	100.2	0.03	28.72
22	81	1100	9.07	267.3	14.16	38.35	100.3	0	28.74
22	81	1200	10.05	288	17.23	39.05	100.3	0	28.75
22	81	1300	8.33	282.5	17.59	39.47	100.3	0	28.76
22	81	1400	10	290.8	17.4	40.28	100.3	0	28.78
22	81	1500	10.14	311.3	18.42	38.06	100.3	0.03	28.79
22	81	1600	9.04	312.9	14.73	38.42	100.3	0.01	28.81
22	81	1700	7.6	304	18.25	39.87	100.3	0	28.84
22	81	1800	8.28	296.4	16.41	39.88	99.4	0	28.86
22	81	1900	9.32	287.5	16.54	39.84	99	0	28.89
22	81	2000	8.93	286.1	17.09	39.51	98.1	0	28.91
22	81	2100	8.7	288.4	15.73	39.39	97.2	0	28.92
22	81	2200	10.38	301.2	15.96	39.18	98.1	0	28.93
22	81	2300	11.9	302.8	15.84	38.18	99.8	0	28.93
23	82	0	11.53	297.4	16.32	37.32	100.1	0	28.93
23	82	100	9.47	299	16.89	36.55	100.1	0	28.93
23	82	200	9.58	295.9	15.93	35.93	100.2	0	28.91
23	82	300	9.46	292.5	16.33	35.71	100.2	0	28.91
23	82	400	8.41	292	17.12	35.48	100.2	0	28.9
23	82	500	8.32	297	15.71	35.36	100.2	0	28.91
23	82	600	8.44	306.2	14.72	35.09	100.2	0	28.91
23	82	700	8.26	320.9	12.93	34.93	100.2	0	28.92
23	82	800	8.21	317.3	14.22	35.17	100.3	0	28.93
23	82	900	8.95	320.5	13.39	35.5	100.2	0	28.94
23	82	1000	8.97	329.6	12.37	36.03	100.2	0	28.93
23	82	1100	9.34	325.5	13.69	36.14	100.3	0	28.93
23	82	1200	9.57	320.1	14.79	36.86	100.3	0	28.94
23	82	1300	9.61	320.6	12.78	36.12	100.3	0	28.95
23	82	1400	10.06	323.8	14	36.81	100.3	0	28.95
23	82	1500	9.73	328	13.97	37.51	100.3	0	28.95
23	82	1600	8.71	331.1	14.33	37.75	99.7	0	28.96
23	82	1700	8.89	336.2	11.39	38.45	95.7	0	28.97
23	82	1800	5.134	328.4	13.78	38.85	94.4	0	28.97
23	82	1900	2.603	312.9	10.9	37.86	98.5	0	28.97
23	82	2000	2.86	329.6	9.24	36.55	100.3	0	28.98
23	82	2100	1.517	336.4	10.99	35.31	100.2	0	28.99
23	82	2200	5.826	302.6	18.03	36.16	100.2	0	29.01
23	82	2300	6.896	314.5	12.33	35.14	100.3	0	29.01
24	83	0	6.028	319.5	11.39	33.62	100.3	0	29
24	83	100	7.48	321.5	11.69	33.39	100.3	0	29
24	83	200	8.11	326.3	10.34	33.01	96.9	0	29.01
24	83	300	9.11	329.9	10.09	32.73	89.6	0	29.01
24	83	400	9.03	331.7	10.39	31.94	87.2	0	29.01
24	83	500	10.56	329	10.7	31.69	85.8	0	29.03

Day	DATE JD	TIME 24H	WS MPH	WD Deg	SIGMA Deg	AT DegF	RH %	RN inch	BP inHg
24	83	600	9.56	332.1	10.51	30.77	85.3	0	29.05
24	83	700	10.21	334.1	10.6	30.31	85.5	0	29.07
24	83	800	12.67	333.5	11.77	32.11	76.5	0	29.1
24	83	900	14.69	343.6	13.3	34.01	66.89	0	29.12
24	83	1000	13.27	340.6	15.45	34.85	62.54	0	29.12
24	83	1100	14.58	336.3	15.98	35.45	58.97	0	29.14
24	83	1200	15.34	323.4	16.68	34.58	61.4	0	29.14
24	83	1300	14.47	334.6	13.91	34.57	61.45	0	29.14
24	83	1400	15.51	326	15.4	35.55	57.93	0	29.15
24	83	1500	14.03	324.2	16.34	36.24	56.63	0	29.16
24	83	1600	14.13	332.2	15.25	36.19	55.77	0	29.16
24	83	1700	13.23	330.3	14.66	36.42	53.63	0	29.17
24	83	1800	11.5	327.2	14.12	35.48	52.73	0	29.17
24	83	1900	7.61	320.8	10.96	33.03	54.36	0	29.18
24	83	2000	4.398	322.7	9.44	30.37	60.74	0	29.18
24	83	2100	5.089	344.8	10.14	28.78	65.96	0	29.19
24	83	2200	4.92	342.8	8.33	27.5	68.57	0	29.2
24	83	2300	4.857	322.6	9.25	27.96	72.3	0	29.2
25	84	0	5.804	317.3	9.55	29.16	72.2	0	29.2
25	84	100	6.635	325.2	10.32	29.51	75.1	0	29.22
25	84	200	8.8	329.9	10.68	30.11	74	0	29.23
25	84	300	9.12	330.8	8.7	29.93	76.9	0	29.24
25	84	400	7.35	331.7	8.85	28.61	79.2	0	29.25
25	84	500	7.76	333.4	8.49	28.21	79.7	0	29.26
25	84	600	6.578	317.6	10.41	28.38	80	0	29.27
25	84	700	7.43	315.9	12.14	28.99	82.2	0	29.29
25	84	800	11.26	322.7	12.73	32.62	72	0	29.33
25	84	900	13	320.9	14.45	35.1	66.11	0	29.35
25	84	1000	15.08	321	14.72	37.4	58.85	0	29.35
25	84	1100	16.11	321.2	14.79	39.21	56.07	0	29.34
25	84	1200	15.9	321.4	15.32	41.55	52.18	0	29.34
25	84	1300	15.35	320.8	15.25	43.64	45.54	0	29.32
25	84	1400	16.99	325.7	13.9	44.6	46.26	0	29.32
25	84	1500	17.94	323	13.26	45.41	43.54	0	29.33
25	84	1600	15.33	308.2	15.67	46.58	43.55	0	29.33
25	84	1700	14.91	307.3	14.98	46.33	45.6	0	29.32
25	84	1800	14.01	302.7	15.83	45.55	48.2	0	29.31
25	84	1900	9.91	304.1	13.69	42.8	56.08	0	29.31
25	84	2000	8.75	301.6	14.69	40.79	62.06	0	29.31
25	84	2100	9.79	304	13.56	39.77	65.97	0	29.32
25	84	2200	9.18	309.9	13.67	38.37	71.7	0	29.33
25	84	2300	7.2	324.7	14.41	35.92	78.5	0	29.31
26	85	0	7.69	312.6	12.06	35.73	80.6	0	29.31
26	85	100	8.43	323.3	9.89	35.44	84.4	0	29.32
26	85	200	8.47	323.7	11.29	35.2	84.7	0	29.33
26	85	300	9.11	324.1	11.08	34.75	85.4	0	29.32
26	85	400	9.78	327.5	10.82	34.62	86	0	29.34
26	85	500	8.51	325	11.27	33.71	89.5	0	29.35
26	85	600	7.45	319.7	11.7	32.77	92.5	0	29.36
26	85	700	8.24	313.8	13.93	33.93	89.3	0	29.39
26	85	800	9.23	319.6	13.93	37.22	81.5	0	29.42
26	85	900	12.04	320.9	14.83	39.82	73.6	0	29.44
26	85	1000	11.46	316.6	17.47	42.02	69.65	0	29.46
26	85	1100	11.05	322.3	16.54	44.96	63.83	0	29.45
26	85	1200	12.59	320.4	18.11	47.39	56.12	0	29.45
26	85	1300	13.7	327.4	16.48	49.59	50.82	0	29.44
26	85	1400	14.63	331.5	15.26	50.96	43.6	0	29.42
26	85	1500	14.4	331.7	13.95	52.06	39.75	0	29.41

Day	DATE JD	TIME 24H	WS MPH	WD Deg	SIGMA Deg	AT DegF	RH %	RN inch	BP inHg
26	85	1600	13.54	328.2	15.4	51.84	38.99	0	29.4
26	85	1700	13.98	333.3	12.5	49.84	38.44	0	29.4
26	85	1800	10.67	345.2	10.77	46.94	43.14	0	29.38
26	85	1900	5.28	351.6	6.893	42.26	52.08	0	29.36
26	85	2000	3.651	353.6	5.826	38.86	62.61	0	29.34
26	85	2100	3.841	286.5	21.68	37.4	66.89	0	29.34
26	85	2200	6.127	301.1	14.11	39.95	68.63	0	29.35
26	85	2300	9.13	308.2	14.05	38.96	75	0	29.34
27	86	0	11.44	355.5	9.74	36.11	83.6	0	29.34
27	86	100	8.41	355.1	8.64	33.05	90.2	0	29.35
27	86	200	5.129	347.7	7.13	29.66	95.1	0	29.34
27	86	300	5.382	341.2	6.657	28.37	98.9	0	29.33
27	86	400	8.08	345.1	8.71	29.49	100.1	0	29.34
27	86	500	7.71	338.6	8.87	28.78	100.2	0	29.37
27	86	600	7.96	356.5	7.99	27.77	100.2	0	29.37
27	86	700	6.872	3.624	8.68	27.88	98.5	0	29.39
27	86	800	10.38	5.905	11.2	31.75	86.8	0	29.44
27	86	900	10.69	8.53	12.65	34.43	78.5	0	29.46
27	86	1000	8.3	2.703	25.06	37.53	71.4	0	29.47
27	86	1100	9.06	6.006	25.96	40.37	65.88	0	29.47
27	86	1200	9.17	359.9	23.61	42.84	62.08	0	29.45
27	86	1300	10.37	12.39	20.76	44.49	60.87	0	29.42
27	86	1400	10.59	17.3	19.72	45.59	60.16	0	29.41
27	86	1500	9.28	6.242	26.4	46.28	58.84	0	29.4
27	86	1600	9.63	17.5	19.3	46.48	56.65	0	29.38
27	86	1700	10.38	10.21	14.07	45.52	57.9	0	29.36
27	86	1800	8.72	351.8	11.61	43.26	62.67	0	29.34
27	86	1900	6.851	353.8	7.14	38.47	70.4	0	29.33
27	86	2000	6.928	3.522	6.421	35.51	77	0	29.3
27	86	2100	6.316	7.33	5.251	34.07	78.7	0	29.3
27	86	2200	1.258	315.7	15.16	31.21	89.6	0	29.29
27	86	2300	2.2	311	17.68	30.73	97.5	0	29.3
28	87	0	4.041	1.88	4.91	31.4	94	0	29.29
28	87	100	4.846	357.5	12.34	30.3	94.4	0	29.28
28	87	200	3.155	332	31.94	29.63	97.1	0	29.28
28	87	300	2.389	45.09	14.32	28.48	100.2	0	29.28
28	87	400	3.971	69.26	15.11	26.66	100.2	0	29.27
28	87	500	5.771	59.54	10.31	28.75	100	0	29.27
28	87	600	2.592	69.65	29.04	26.14	100.2	0	29.27
28	*87*	*700*	*none* C	*none* C	*none*	*none* C	*none*	*none* C	*none*
28	*87*	*800*	*none* C	*none* C	*none*	*none* C	*none*	*none* C	*none*
28	*87*	*900*	*none* C	*none* C	*none*	*none* C	*none*	*none* C	*none*
28	*87*	*1000*	*none* C	*none* C	*none*	*none* C	*none*	*none* C	*none*
28	*87*	*1100*	*none* C	*none* C	*none*	*none* C	*none*	*none* C	*none*
28	*87*	*1200*	*none* C	*none* C	*none*	*none* C	*none*	*none* C	*none*
28	*87*	*1300*	*none* C	*none* C	*none*	*none* C	*none*	*none* C	*none*
28	*87*	*1400*	*none* C	*none* C	*none*	*none* C	*none*	*none* C	*none*
28	*87*	*1500*	*none* C	*none* C	*none*	*none* C	*none*	*none* C	*none*
28	*87*	*1600*	*none* C	*none* C	*none*	*none* C	*none*	*none* C	*none*
28	*87*	*1700*	*none* C	*none* C	*none*	*none* C	*none*	*none* C	*none*
28	*87*	*1800*	*none* C	*none* C	*none*	*none* C	*none*	*none* C	*none*
28	*87*	*1900*	*none* C	*none* C	*none*	*none* C	*none*	*none* C	*none*
28	*87*	*2000*	*none* C	*none* C	*none*	*none* C	*none*	*none* C	*none*
28	*87*	*2100*	*none* C	*none* C	*none*	*none* C	*none*	*none* C	*none*
28	*87*	*2200*	*none* C	*none* C	*none*	*none* C	*none*	*none* C	*none*
28	*87*	*2300*	*none* C	*none* C	*none*	*none* C	*none*	*none* C	*none*
29	*88*	*0*	*none* C	*none* C	*none*	*none* C	*none*	*none* C	*none*
29	*88*	*100*	*none* C	*none* C	*none*	*none* C	*none*	*none* C	*none*

Day	DATE JD	TIME 24H	WS MPH	WD Deg	SIGMA Deg	AT DegF	RH %	RN inch	BP inHg
29	*88*	*200*	*none* [C]	*none* [C]	*none*	*none* [C]	*none*	*none* [C]	*none*
29	*88*	*300*	*none* [C]	*none* [C]	*none*	*none* [C]	*none*	*none* [C]	*none*
29	*88*	*400*	*none* [C]	*none* [C]	*none*	*none* [C]	*none*	*none* [C]	*none*
29	*88*	*500*	*none* [C]	*none* [C]	*none*	*none* [C]	*none*	*none* [C]	*none*
29	88	600	5.24	163.4	7.97	28.07	100.3	0	29.3
29	88	700	4.258	165.8	11.94	28.89	99.7	0	29.31
29	88	800	5.32	179.6	15.5	33.51 [(4)]	96.3	0	29.35
29	88	900	4.963	202.8	23.89	40.34 [(4)]	73.9	0	29.37
29	88	1000	4.078	193.7	28.32	46.2 [(4)]	57.73	0	29.4
29	88	1100	5.44	133.7	39	52.74 [(4)]	44.07	0	29.39
29	88	1200	6.575	209	59.38	55.02	39.47	0	29.36
29	88	1300	6.113	195	40.31	56.86	32.97	0	29.34
29	88	1400	4.988	100.9	51.67	58	33.37	0	29.31
29	88	1500	8.41	70.3	26.99	58.92	36.36	0	29.28
29	88	1600	6.413	65.77	25.97	57.94	33.97	0	29.26
29	88	1700	6.701	73.8	29.42	55.4	35.57	0	29.24
29	88	1800	11.52	257.7	20.6	51.67 [(4)]	52.35	0	29.25
29	88	1900	8.81	284.1	16.68	46.15 [(4)]	87.5	0	29.26
29	88	2000	6.375	256.9	11.62	44.14	98.4	0.03	29.27
29	88	2100	4.527	259.4	22.97	41.71	100.3	0.08	29.28
29	88	2200	4.529	319.9	13.51	40	100.3	0.04	29.27
29	88	2300	2.792	7.2	11.52	39.22	100.3	0.02	29.26
30	89	0	2.128	75.9	13.78	38.83	100.3	0	29.25
30	89	100	3.975	108.2	10.8	38.64	100.3	0	29.24
30	89	200	4.796	119.4	9.89	39.13	100.3	0.01	29.23
30	89	300	3.398	167.1	21.87	39.39	100.3	0.03	29.22
30	89	400	4.177	183.7	9.94	39.07	100.3	0.05	29.2
30	89	500	4.811	170.3	9.71	39.31	100.3	0.06	29.2
30	89	600	5.031	188.3	9.17	39.25	100.3	0	29.19
30	89	700	6.426	187.7	7.72	39.62	100.3	0	29.2
30	89	800	6.651	200.6	9.88	41	100.3	0	29.21
30	89	900	7.6	191	10.06	43.41	100.3	0	29.22
30	89	1000	7.87	194.7	9.83	43.55	100.3	0	29.23
30	89	1100	7.84	227.9	13.81	43.23	99.5	0	29.22
30	89	1200	6.769	253.8	11.96	45.01	92.8	0	29.22
30	89	1300	6.992	292.7	20.48	45.14	87.7	0	29.2
30	89	1400	6.691	307.1	18.22	45.36	87.4	0	29.19
30	89	1500	7.52	294.6	19.53	45.05	89.1	0	29.18
30	89	1600	8.36	294.7	17.4	45.11	84	0	29.18
30	89	1700	8.26	258.8	11.92	42.86	96.2	0	29.18
30	89	1800	7.04	279	16.08	42.05	96.1	0	29.18
30	89	1900	6.221	254.9	17.29	40.39	95.5	0	29.18
30	89	2000	5.484	217	13.14	38.65	94.1	0	29.17
30	89	2100	4.447	183.9	13.05	38.42	97	0	29.18
30	89	2200	5.696	210.8	12.95	37.91	98.1	0	29.18
30	89	2300	7.53	234.9	9.9	37.26	99.6	0	29.17
31	90	0	7.1	224.1	13.46	37.67	98.5	0	29.17
31	90	100	8.17	233.4	7.05	37	100.2	0	29.16
31	90	200	7.13	245.6	11.32	35.87	100.2	0	29.15
31	90	300	7.19	276.3	14.7	36.41	100.2	0	29.14
31	90	400	8.69	278	13.47	36.49	100	0	29.14
31	90	500	8.83	280	15.83	35.94	100.2	0	29.14
31	90	600	7.96	275.1	15.72	35.49	100.2	0	29.15
31	90	700	5.448	281.8	16.27	34.67	100.3	0	29.16
31	90	800	8.04	286.8	15.27	36.5	100	0	29.18
31	90	900	9.75	292.6	17.87	38.13	95.4	0	29.19
31	90	1000	10.78	301.6	17.36	39.39	89.6	0	29.2
31	90	1100	11.44	305.4	22.49	41.2	82.5	0	29.21

Day	DATE JD	TIME 24H	WS MPH	WD Deg	SIGMA Deg	AT DegF	RH %	RN inch	BP inHg
31	90	1200	11.41	317	18.19	41.37	79	0	29.2
31	90	1300	11.62	276.9	17.26	40.19	83.2	0	29.19
31	90	1400	8.31	291.5	25.57	41.95	73.3	0	29.18
31	90	1500	10.87	273	13.14	41.87	65.42	0	29.16
31	90	1600	9.5	289.8	18.93	41.26	64.41	0	29.16
31	90	1700	10.51	283.7	17.97	41.46	70.5	0	29.17
31	90	1800	10.26	308.8	17.22	36.49	93.1	0.01	29.18
31	90	1900	6.608	306.2	16.45	34.95	100.3	0	29.17
31	90	2000	8.42	274.5	14.68	34.88	100.2	0	29.19
31	90	2100	8.45	267	12.2	34.77	100.2	0	29.19
31	90	2200	8.07	269.9	12.78	34.3	100.3	0	29.2
31	90	2300	8.34	278.9	14.79	33.58	100.3	0	29.2
01-Apr	91	0	6.67	277.2	14.52	32.23	99.7	0	29.2
1	91	100	7.68	288.9	15.48	31.26	89.3	0	29.21
1	91	200	7.15	283.3	16.36	29.95	84.3	0	29.2
1	91	300	6.664	290.4	17.11	29.12	84.5	0	29.2
1	91	400	6.447	301.3	13.93	28.52	86.9	0	29.2
1	91	500	7.09	314.3	12.45	27.81	91.3	0	29.21
1	91	600	5.787	317.9	9.42	26.56	94.9	0	29.22
1	91	700	5.142	319.6	9.62	27.04	92.1	0	29.23
1	91	800	7.31	325	13.8	30.88	79.3	0	29.28
1	91	900	8.91	334.9	15.59	33.78	69.03	0	29.3
1	91	1000	9.59	319.3	21.1	35.42	57.97	0	29.31
1	91	1100	9.82	337.1	22.61	37.45	49.86	0	29.31
1	91	1200	10.95	326.1	23.55	38.48	45.77	0	29.31
1	91	1300	10.16	336.2	20.32	39.95	42.51	0	29.29
1	91	1400	9.59	315	26.16	40.95	41.06	0	29.28
1	91	1500	10.01	320.2	29.02	41.06	39.48	0	29.26
1	91	1600	10.54	338.8	24.68	40.8	37.99	0	29.25
1	91	1700	9.58	349.9	19.26	39.8	38.71	0	29.24
1	91	1800	8.81	2.379	15.12	37.46	41.73	0	29.22
1	91	1900	6.614	21.84	8.33	32.82	48.96	0	29.21
1	91	2000	5.101	38.31	5.087	29.18	59.95	0	29.22
1	91	2100	4.455	49.52	3.671	26.8	74.2	0	29.22
1	91	2200	3.87	67.92	7.04	24.94	86.1	0	29.22
1	91	2300	3.839	56.87	7.19	23.69	88.8	0	29.22
2	92	0	4.49	75	5.764	23.97	93.8	0	29.22
2	92	100	2.618	157.6	20.15	25.4	87.8	0	29.22
2	92	200	3.292	137.8	8.59	27.41	84.6	0	29.22
2	92	300	3.497 (1)	103.5	16.02	26.7	92.5	0	29.22
2	92	400	3.438 (1)	144.4	8.39	26.6	88.4	0	29.22
2	92	500	3.537 (1)	157.8	8.72	27.25	88	0	29.22
2	92	600	4.472	137	9.54	26.76	94.6	0	29.23
2	92	700	3.476	133	8.75	28.22	83.5	0	29.25
2	92	800	3.118	173.7	21.31	33.18	72.6	0	29.29
2	92	900	4.578	136.7	27.96	37.79	47.16	0	29.33
2	92	1000	4.98	86	40.96	41.81	36.38	0	29.35
2	92	1100	5.336	63.31	31.45	44.79	33.33	0	29.37
2	92	1200	6.804	33.01	42.11	45.05	33.84	0	29.36
2	92	1300	5.323	29.67	72.6	46.88	32.13	0	29.35
2	92	1400	7.25	326.9	47.43	46.87	33.48	0	29.36
2	92	1500	7.15	304.4	30.56	46.77	33.36	0	29.35
2	92	1600	6.754	356.4	44.77	47.16	33.03	0	29.34
2	92	1700	7.24	32.63	43.82	46.59	34.84	0	29.35
2	92	1800	9.32	36.3	13.72	43.82	40.64	0	29.34
2	92	1900	7.29	35.74	8.11	38.98	45.06	0	29.33
2	92	2000	6.087	46.78	4.567	34.76	53.53	0	29.33
2	92	2100	5.766	71.9	9.15	32.38	64.32	0	29.34

Day	DATE JD	TIME 24H	WS MPH	WD Deg	SIGMA Deg	AT DegF	RH %	RN inch	BP inHg
2	92	2200	1.768	239.3	18.07	27.98	83.2	0	29.34
2	92	2300	2.436	134.4	8.8	27.48	85.8	0	29.34
3	93	0	3.521	171.4	10.15	26.87	83.2	0	29.34
3	93	100	5.673	165.8	8	28.3	87.6	0	29.35
3	93	200	6.391	170.5	7.53	28.86	83.7	0	29.35
3	93	300	6.395	164.5	7.78	28.12	95.9	0	29.34
3	93	400	6.132	162.6	8.9	27.44	97.4	0	29.34
3	93	500	6.923	166.7	9.28	27.91	93.9	0	29.34
3	93	600	7.72	171.1	8.47	27.85	96.4	0	29.34
3	93	700	9.84	180.1	7.98	30.64	89.8	0	29.36
3	93	800	11.52	175.9	10	34.73	75.1	0	29.37
3	93	900	13.79	183.1	9.37	37.72	61.13	0	29.37
3	93	1000	13.29	179.6	8.61	38.62	63.82	0	29.35
3	93	1100	16.73	172.2	10.81	41.53	56.36	0	29.3
3	93	1200	14.92	164.4	12.29	44.37	62.43	0	29.25
3	93	1300	21.08	173.1	10.12	49.15	56.6	0	29.2
3	93	1400	22.87	176.5	9.04	53.49	52.27	0	29.16
3	93	1500	23.43	179	8.78	56.6	47.78	0	29.12
3	93	1600	20.85	176.8	10.78	58.69	45.56	0	29.09
3	93	1700	18.03	182.5	7.94	56.39	52.5	0	29.06
3	93	1800	15.41	193.1	11.31	55.67 (4)	57.62	0.02	29.06
3	93	1900	7.43	277.7	21.94	50.22 (4)	98.7	0.06	29.09
3	93	2000	4.64	238	20.82	47.82	100.3	0.09	29.11
3	93	2100	4.506	351.1	14.54	47.36	100.3	0	29.12
3	93	2200	4.889	120.8	12.91	46.46	100.3	0	29.09
3	93	2300	6.686	134	10.35	46.79	100.3	0	29.06
4	94	0	7.21	181.1	19.95	46.61	100.3	0.02	29.02
4	94	100	11.34	177.7	8.79	46.4	100.3	0	28.99
4	94	200	10.03	178.6	9	46.46	100.3	0	28.95
4	94	300	10.35	181.4	7.88	46.35	100.3	0	28.92
4	94	400	8.35	172.2	10.11	46.72	100.3	0	28.88
4	94	500	8.31	184	13.17	47.11	100.3	0	28.86
4	94	600	6.645	158	13.96	46.91	100.3	0	28.84
4	94	700	9.49	172.9	9.23	47.35	100.3	0	28.83
4	94	800	8.47	176.9	9.61	47.88	100.3	0	28.82
4	94	900	10.87	239.6	14.32	46.47 (4)	100.3	0.12	28.8
4	94	1000	17.89	302	17.46	37.87 (4)	100.3	0	28.86
4	94	1100	18.05	304.1	16.69	33.4	99	0	28.91
4	94	1200	19.47	283.8	16.96	31.27	88.2	0	28.98
4	94	1300	18.37	284.8	17.11	30.56	81.7	0.01	29.01
4	94	1400	17.25	295.7	17.23	31.06	69.37	0	29.03
4	94	1500	18.58	305.7	16.58	28.88	73.7	0	29.05
4	94	1600	18.36	292.4	18.97	26.96	83.8	0.11	29.08
4	94	1700	18.56	285.1	17.9	26.49	71.3	0.01	29.11
4	94	1800	17.84	287.4	18.06	24.13	71.9	0.01	29.14
4	94	1900	16.16	298.9	18.72	21.97	75.8	0	29.16
4	94	2000	16.07	299.9	15.83	20.87	68.54	0	29.18
4	94	2100	15.74	293.3	17.31	20.22	60.75	0	29.2
4	94	2200	15.84	293.7	17.14	19.49	68.04	0	29.21
4	94	2300	10.89	293.5	17.2	18.62	74.5	0	29.22
5	95	0	8.51	287.4	16.83	18.11	75.1	0	29.21
5	95	100	9.99	280.8	15.49	18.16	73.2	0	29.21
5	95	200	13.82	267.2	12.46	17.89	80.5	0	29.21
5	95	300	13.81	275.5	14.82	17.69	84.1	0	29.2
5	95	400	14.43	276	16.29	17.22	92.1	0	29.21
5	95	500	14.12	279.3	15.45	17.23	93.3	0	29.23
5	95	600	14.98	273.7	14.88	17.03	90.7	0	29.25
5	95	700	18.04	267.1	12.93	18	83.7	0	29.27

Day	DATE JD	TIME 24H	WS MPH	WD Deg	SIGMA Deg	AT DegF	RH %	RN inch	BP inHg
5	95	800	17.56	274.8	15.74	20.52	72.2	0.07	29.3
5	95	900	18.32	278.9	17.18	22.74	64.38	0	29.31
5	95	1000	17.16	288.5	18.13	23.16	64.16	0	29.32
5	95	1100	17.25	300.6	19.46	24.74	66.18	0	29.33
5	95	1200	17.65	301.1	18.33	25.87	69.79	0	29.33
5	95	1300	16.65	307.2	16.62	25.63	75.8	0	29.31
5	95	1400	15.3	295.6	20.34	27.05	66.23	0	29.32
5	95	1500	14.84	282.3	19.01	28.1	63.04	0	29.32
5	95	1600	15.11	307.5	18.06	27.93	61.83	0	29.3
5	95	1700	13.05	321.9	13.39	27.47	65.25	0	29.3
5	95	1800	13	302.6	18.57	27.84	62.72	0	29.31
5	95	1900	10.36	298.4	15.8	25.44	77.7	0	29.33
5	95	2000	8.94	290.2	15.61	24.67	81.8	0	29.35
5	95	2100	7.28	288.2	16.34	24.37	81.1	0	29.36
5	95	2200	6.962	267.2	12.32	23.82	83	0	29.36
5	95	2300	7.45	255.8	10.16	23.07	84.7	0	29.36
6	96	0	5.263	249.3	10.23	21.94	87.8	0	29.35
6	96	100	4.047	322.9	24.3	21.5	89.8	0	29.35
6	96	200	4.281	51.35	7.99	22.29	93.9	0	29.35
6	96	300	2.191	81.3	15.38	22.18	96.7	0	29.35
6	96	400	3.848	79.9	6.703	22.7	98.2	0	29.35
6	96	500	5.404	94.8	6.289	21.74	99	0	29.33
6	96	600	6.24	112.9	9.84	21.36	97.8	0	29.31
6	96	700	7.28	122.2	11.67	24.28	94.2	0	29.31
6	96	800	7.55	146.6	15.53	26.96	82.8	0	29.31
6	96	900	10.2	177.3	12.76	30.35	73.2	0	29.3
6	96	1000	13.7	185.9	10.92	32.65	67.51	0	29.28
6	96	1100	12.46	181.8	11.03	35	66	0	29.24
6	96	1200	12.22	172.3	12.03	35.96	62.13	0	29.19
6	96	1300	11.31	161.7	13.77	36.96	61.57	0	29.13
6	96	1400	10.65	164.9	14.22	38.27	61.15	0	29.1
6	96	1500	10.83	194.3	12.86	36.46	87.5	0	29.12
6	96	1600	7.82	138.9	18.62	36.27	100.3	0	29.07
6	96	1700	8.35	105.4	9.76	36.74	100.3	0	29.05
6	96	1800	6.317	88.7	15.92	37.41	96.7	0	29.05
6	96	1900	5.115	95	17.04	37.21	91.9	0	29.05
6	96	2000	2.519	139.2	37.83	34.27	98.9	0	29.07
6	96	2100	2.602	25	18.1	30.74	100.3	0	29.08
6	96	2200	2.994	4.268	15.6	31.22 (4)	100.3	0	29.08
6	96	2300	6.222	337.9	10.7	38.73 (4)	100.3	0	29.1
7	97	0	7.77	356.7	10.04	36.26	100.3	0	29.12
7	97	100	8.08	350.6	9.07	33.05	100.3	0	29.13
7	97	200	8.09	354.3	10.22	31.59	100.3	0	29.14
7	97	300	8.75	357.8	8.56	30.05	100.3	0	29.14
7	97	400	7.31	345.3	9.62	29.29	100.3	0	29.16
7	97	500	7.46	345.7	12	28.83	100.3	0	29.18
7	97	600	7.46	348	11.13	28.57	100.3	0	29.21
7	97	700	8.69	351.4	9.14	28.24	100.3	0	29.24
7	97	800	8.3	349	9.79	28	100.3	0	29.26
7	97	900	9.28	349.9	10.88	28.21	100.3	0	29.28
7	97	1000	9.57	342.4	12.03	28.76	100.1	0	29.31
7	97	1100	8.62	340.7	16.61	30.71	95.7	0	29.32
7	97	1200	9.6	322.3	17.89	32.49	89.4	0	29.33
7	97	1300	9.15	311.2	21.77	34.22	84.9	0	29.34
7	97	1400	10.2	309.1	22.03	36.94	77.9	0	29.35
7	97	1500	10.41	313.4	20.54	37.63	75.4	0	29.34
7	97	1600	9.47	306.1	22.16	38.21	73.7	0	29.33
7	97	1700	7.77	312.6	20.91	37.51	74.2	0	29.34

Day	DATE JD	TIME 24H	WS MPH	WD Deg	SIGMA Deg	AT DegF	RH %	RN inch	BP inHg
7	97	1800	5.962	332.7	14.91	35.41	78.5	0	29.32
7	97	1900	6.076	343.8	18.34	34.17	81.3	0	29.32
7	97	2000	5.754	32.96	8	29.93	87.2	0	29.32
7	97	2100	5.157	49.97	5.152	27.01	89.1	0	29.32
7	97	2200	2.274	115.4	15.3	25.17	92.8	0	29.3
7	97	2300	3.803	98.9	9.34	23.52	100.2	0	29.28
8	98	0	3.745	118.7	4.356	23.72	100.3	0	29.27
8	98	100	3.363	144	5.667	23.58	100.3	0	29.25
8	98	200	2.703	141.2	11.98	23.69	100.3	0	29.24
8	98	300	4.128	145.4	8.07	24.38	99.7	0	29.23
8	98	400	5.03	148.8	8.48	26.26	100.3	0	29.2
8	98	500	5.193	171.7	26.85	28.43	100.3	0	29.21
8	98	600	10.09	173.8	9.2	29.54	100.2	0	29.24
8	98	700	10.72	172.2	10.7	28.93	100.3	0.01	29.24
8	98	800	8.19	165.7	12.95	30.11	100.3	0.03	29.2
8	98	900	9.24	174.5	10.09	31.39	100.3	0.02	29.17
8	98	1000	10.1	165	11.98	32.21	100.3	0.01	29.15
8	98	1100	5.14	139	14.64	33.82	100.3	0	29.12
8	98	1200	10.85	171.7	10.69	35.67	100.3	0	29.11
8	98	1300	10.75	175.2	9.07	37.18	100.2	0	29.1
8	98	1400	9.07	176.3	8.66	38.35	100.3	0	29.1
8	98	1500	11.21	172.6	11.93	42	100.3	0	29.09
8	98	1600	13.17	182.3	8.12	42.35	100.3	0	29.09
8	98	1700	11.92	180.3	8.66	42.44	100.3	0	29.09
8	98	1800	8.96	174.8	9.29	41.82	100.3	0	29.09
8	98	1900	7.1	169	10.58	41.72	100.3	0	29.08
8	98	2000	4.248	134	14.87	40.81	100.3	0	29.08
8	98	2100	8.11	165.8	11.22	40.25	100.3	0	29.08
8	98	2200	9.78	180.1	7.81	39.77	100.3	0	29.08
8	98	2300	6.772	165.4	11.23	39.32	100.3	0	29.08
9	99	0	7.77	178.5	9.4	39.25	100.3	0	29.07
9	99	100	6.071	171.4	9.04	39.18	100.3	0	29.06
9	99	200	4.963	164.6	11.73	39.02	100.3	0	29.04
9	99	300	4.938	175	11.25	39.42	100.3	0	29.04
9	99	400	5.903	182.1	9.5	39.38	100.3	0	29.02
9	99	500	5.642	189.6	12.75	38.5	100.3	0	29.03
9	99	600	2.91	321.9	14.34	38.18	100.3	0	29.05
9	99	700	6.188	339.6	10.15	37.66	100.3	0	29.08
9	99	800	6.045	339.6	11.19	37.12	100.3	0	29.09
9	99	900	6.259	344	11.25	36.86	100.3	0.02	29.09
9	99	1000	5.673	350.3	12.62	36.78	100.3	0	29.08
9	99	1100	7.19	331.7	11.62	36.48	100.2	0.03	29.1
9	99	1200	7.99	333.8	12.97	36.06	100.2	0.07	29.12
9	99	1300	9.78	349.5	11.26	35.76	100.2	0.01	29.11
9	99	1400	9.46	333.5	15.07	33.72	100.2	0.06	29.13
9	99	1500	7.72	340.2	9.89	32.44	100.3	0.07	29.14
9	99	1600	4.737	341.7	10.71	33.04	100.3	0.1	29.16
9	99	1700	4.159	333.7	11.16	33.59	100.3	0.04	29.17
9	99	1800	2.633	306.5	13.01	33.32	100.2	0.03	29.2
9	99	1900	1.571	295.2	13.45	33.26	100.3	0.03	29.23
9	99	2000	2.983	299.3	16.96	31.8	100.3	0	29.25
9	99	2100	5.372	12.94	10.18	29.85	100.3	0.02	29.28
9	99	2200	7.59	0.296	7.11	29.26	100.3	0	29.31
9	99	2300	8.12	5.756	6.322	27.69	100.2	0	29.35
10	100	0	7.81	6.376	6.891	25.29	98.4	0	29.38
10	100	100	10.35	15.71	9.08	25.99	84.9	0	29.4
10	100	200	7.31	14.86	7.24	23.45	87.4	0	29.43
10	100	300	6.732	20.83	7.09	21.38	87.2	0	29.45

Day	DATE JD	TIME 24H	WS MPH	WD Deg	SIGMA Deg	AT DegF	RH %	RN inch	BP inHg
10	100	400	4.835	36.96	7.3	19.91	86.4	0	29.46
10	100	500	3.179	19.07	9.23	17.34	92.6	0	29.48
10	100	600	3.806	21.36	10.91	16.52	94.5	0	29.5
10	100	700	2.4	312.5	13.41	20.64 (4)	85.1	0	29.59
10	100	800	4.539	17.64	16.7	27.9 (4)	65.11	0	29.65
10	100	900	7.59	37.66	15.2	31.13	57.54	0	29.67
10	100	1000	6.237	25.89	16.66	31.95	57.81	0	29.68
10	100	1100	5.693	13.07	19.7	33.24	58.78	0	29.67
10	100	1200	4.196	5.16	19.98	34.6	58.33	0	29.66
10	100	1300	4.073	359.8	22.31	35.1	60.79	0	29.66
10	100	1400	4.122	17.4	33.24	39.66	57.12	0	29.67
10	100	1500	6.369	24.72	18.67	38.8	62	0	29.65
10	100	1600	5.47	354.5	26.91	39.99	65.33	0	29.65
10	100	1700	5.509	247.8	42.54	39.85	70.1	0	29.65
10	100	1800	7.47	186.9	8.76	37.05	77.4	0	29.63
10	100	1900	5.914	184.9	9.01	34.27	87.3	0	29.6
10	100	2000	1.737	122.1	11.36	31.44	95.1	0	29.6
10	100	2100	2.535	39.95	15.21	28.88	100.2	0	29.63
10	100	2200	2.243	136	20.28	27.83	100.2	0	29.61
10	100	2300	2.052	158	15.2	27.66	100.2	0	29.6
11	101	0	4.85	167.8	11.32	27.68	100.3	0.04	29.6
11	101	100	5.2	164.8	8.49	28.42	100.3	0	29.58
11	101	200	3.637	106.4	12.31	27.2	100.3	0	29.57
11	101	300	1.775	93.9	24.94	26.14	100.3	0	29.57
11	101	400	1.976	152.5	19.23	25.31	100.3	0	29.59
11	101	500	3.876	118.9	14.38	26.36	100.3	0	29.6
11	101	600	1.834	152.1	13.71	25.71	100.3	0	29.6
11	101	700	3.277	164.7	8.39	29.93 (4)	100.3	0	29.63
11	101	800	5.163	177.5	13.62	35.35 (4)	94.5	0	29.66
11	101	900	12.15	132.1	12.45	41.76 (4)	73.6	0	29.67
11	101	1000	12.58	133.6	13.52	45.6	68.1	0	29.65
11	101	1100	14.36	137.2	14.07	49.84	54.93	0	29.64
11	101	1200	13.82	143.7	15.45	53.19	51.8	0	29.62
11	101	1300	13.62	144.7	16.49	56.05	49	0	29.6
11	101	1400	14.4	140.5	15.18	58.3	48.32	0	29.59
11	101	1500	14.8	139.3	14.97	60.53	48.13	0	29.57
11	101	1600	15.41	147.3	14.56	62.23	46.41	0	29.54
11	101	1700	20.96	181.8	8.93	59.33	53.83	0	29.52
11	101	1800	18.96	177.9	8.78	56.08	62.31	0	29.5
11	101	1900	19.14	175.9	9.56	53.94	69.27	0	29.48
11	101	2000	18.07	167.3	11.65	53.12	69.09	0	29.47
11	101	2100	19.83	170	10.42	51.99	74.3	0	29.47
11	101	2200	19.79	169	10.95	51.74	76.1	0	29.45
11	101	2300	20.62	169.3	10.14	51.56	79.8	0	29.43
12	102	0	22.19	168.5	9.86	51.58	84	0.01	29.4
12	102	100	22.71	174.9	8.35	50.32	87.8	0	29.39
12	102	200	19.61	173.4	10.17	50.54	83.3	0	29.37
12	102	300	21.62	176.5	8.52	49.02	88.7	0	29.36
12	102	400	22.93	177.2	7.83	49.77	92	0	29.36
12	102	500	21.12	177.9	8.06	49.5	96.6	0	29.36
12	102	600	19.75	172	9.78	49.66	98.5	0	29.36
12	102	700	17.74	168.8	10.38	49.67	99	0.1	29.37
12	102	800	20.25	172.1	9.89	51.5	95.5	0.24	29.37
12	102	900	19.51	174.8	9.47	52.33	97.2	0.01	29.36
12	102	1000	19.09	176.1	8.91	54.23	97	0	29.35
12	102	1100	20.43	176	8.23	55.84	96.1	0	29.33
12	102	1200	16.12	174.2	8.79	57.13	95.1	0	29.3
12	102	1300	14.86	181.8	9.15	56.02	98.9	0	29.28

Day	DATE JD	TIME 24H	WS MPH	WD Deg	SIGMA Deg	AT DegF	RH %	RN inch	BP inHg
12	102	1400	13.99	180.3	9.23	54.94	100.3	0	29.25
12	102	1500	11.08	179.8	10.78	51.7	100.3	0.15	29.22
12	102	1600	7.33	181.4	13.39	52.46	100.3	0.01	29.19
12	102	1700	5.683	255.2	23.33	51.65	100.3	0.15	29.19
12	102	1800	5.611	348.5	24.01	50.58	100.3	0.13	29.19
12	102	1900	4.846	162.7	14.75	50.27	100.3	0.04	29.19
12	102	2000	6.843	149.3	13.07	50.55	100.3	0.2	29.17
12	102	2100	7.55	149.3	14.32	50.02	100.3	0	29.12
12	102	2200	11.25	174.1	8.86	47.62	100.3	0	29.12
12	102	2300	10.59	180.2	7.83	46.52	100.3	0	29.09
13	103	0	8.66	189.1	11.11	47.11	100.3	0.03	29.1
13	103	100	8.54	186.4	10.11	47.07	100.3	0	29.07
13	103	200	6.958	246.5	17.07	46.97	100.3	0	29.08
13	103	300	7.01	240	15.21	46.54	99.9	0	29.06
13	103	400	5.322	237.9	13.55	45.22	100.2	0	29.05
13	103	500	7.1	232.3	12.43	44.2	100.1	0	29.04
13	103	600	5.602	219.2	11.42	42.25	99.9	0	29.03
13	103	700	7.8	210.5	11.27	43.72	97.3	0	29.05
13	103	800	9.19	231.9	9.38	43.82	98.4	0	29.06
13	103	900	9.77	257.2	12.79	43.89	99.6	0	29.07
13	103	1000	10.51	263	11.82	45.94	96.6	0	29.08
13	103	1100	15.61	257.8	10.84	46.49	90.1	0	29.08
13	103	1200	15.17	263.8	11.79	47.46	87.3	0	29.07
13	103	1300	16.74	261.1	9.72	48.12	82.9	0	29.07
13	103	1400	15.99	258	10.12	46.01	84.7	0	29.05
13	103	1500	14.62	258.1	9.81	44.26	89.9	0	29.04
13	103	1600	13.26	250.7	9.43	45	87.4	0	29.04
13	103	1700	9.97	250.4	9.19	44.41	90.7	0	29.05
13	103	1800	7.12	256.7	11.04	43.46	98.2	0	29.05
13	103	1900	6.271	259.2	10.3	41.7	100.3	0	29.03
13	103	2000	7.04	231.5	12.24	40.53	100.3	0	29.03
13	103	2100	5.649	188.5	7.16	39.45	100.3	0	29.04
13	103	2200	5.88	199.1	9.67	38.61	100.3	0	29.03
13	103	2300	6.828	251.1	8.71	38.46	100.3	0	29.03
14	104	0	5.824	254.8	11.33	37.36	100.3	0	29.03
14	104	100	4.327	248	8.98	37.05	100.2	0	29.03
14	104	200	4.58	226.8	9.74	38.04	100.2	0	29.02
14	104	300	4.626	282.8	21.62	38.88	100.3	0.03	29.02
14	104	400	6.589	313.5	14.25	39.16	100.3	0	29.04
14	104	500	5.3	314.4	12.53	38.64	100.3	0	29.04
14	104	600	4.986	297.7	16.14	38.5	100.3	0	29.05
14	104	700	7.06	303.3	13.79	38.5	100.3	0.01	29.08
14	104	800	5.55	291.7	17.3	38.29	100.3	0.03	29.09
14	104	900	5.416	292.5	17.29	38.79	100.3	0.01	29.1
14	104	1000	7.22	294.8	18.71	40.55	100.3	0.04	29.12
14	104	1100	9.53	308.3	19.79	42.08	100.3	0	29.12
14	104	1200	10.68	325.7	19.69	42.4	100.3	0	29.13
14	104	1300	11.05	313.5	15.3	39.97	100.3	0.07	29.14
14	104	1400	11.45	301.6	14.7	39.58	100.3	0	29.14
14	104	1500	10.98	288.3	16.05	38.8	100.3	0	29.15
14	104	1600	11.09	288.3	17.77	38.58	100.3	0	29.16
14	104	1700	9.75	284.6	16.57	38.96	100.3	0	29.17
14	104	1800	9.78	277.7	15.61	40.51	99.9	0	29.18
14	104	1900	10.63	275.8	15.53	40.04	99	0	29.18
14	104	2000	8.37	272.8	14.46	39.5	99.2	0	29.2
14	104	2100	8.53	284.5	16.66	39.59	95.9	0	29.21
14	104	2200	10.69	290.3	16.61	39.04	94.8	0	29.21
14	104	2300	10.05	295.5	16.05	37.57	97.6	0	29.21

Day	DATE JD	TIME 24H	WS MPH	WD Deg	SIGMA Deg	AT DegF	RH %	RN inch	BP inHg
15	105	0	9	286	16.64	35.96	100.2	0	29.2
15	105	100	7.69	297.7	17.88	34.86	99.3	0	29.19
15	105	200	8.09	289.5	19	34.1	91.5	0	29.17
15	105	300	8.22	292	17.09	33.55	90.3	0	29.16
15	105	400	9.6	289.1	15.88	32.94	93.8	0	29.17
15	105	500	8.29	287.4	15.63	32.02	96.5	0	29.17
15	105	600	8.11	281	16.17	31.33	98.2	0	29.18
15	105	700	9.3	287.2	16.44	32.69	93.4	0	29.21
15	105	800	12.6	301.5	16.35	34.54	80.9	0	29.23
15	105	900	14.81	307.6	15.24	35.79	69.03	0	29.23
15	105	1000	14.94	298.9	17.31	38.05	67.04	0	29.23
15	105	1100	14.82	287.6	19.4	40.28	66.35	0	29.22
15	105	1200	14.41	297.9	17.74	40.58	68.05	0	29.21
15	105	1300	14.86	303.6	18.76	42.53	64.38	0	29.2
15	105	1400	16.33	301.2	17.52	43.46	59.5	0	29.2
15	105	1500	16.95	303.5	18.03	44.98	55.17	0	29.21
15	105	1600	16.38	299.3	19.04	44.76	54.9	0	29.2
15	105	1700	15.06	302.5	15.76	45.07	53.44	0	29.2
15	105	1800	14.34	305.2	15.75	44.26	51.85	0	29.19
15	105	1900	12.34	298	15.99	42.47	55.38	0	29.18
15	105	2000	10.53	299.1	15.2	40.83	60.6	0	29.19
15	105	2100	9.42	292.8	15.84	38.91	63.61	0	29.19
15	105	2200	9.73	288	17.18	37.68	66.27	0	29.19
15	105	2300	8.81	293.7	18.08	36.84	66.91	0	29.18
16	106	0	8.52	285.9	17.8	36.34	67.24	0	29.17
16	106	100	9.06	290.8	17.42	36	65.78	0	29.16
16	106	200	10.16	286.2	16.3	36.2	63.53	0	29.15
16	106	300	9.87	277.4	14.31	35.37	66.45	0	29.15
16	106	400	9.18	276.1	14.17	34.49	71.1	0	29.15
16	106	500	8.45	276	13.16	33.46	74.1	0	29.15
16	106	600	9.62	274.3	14.03	33.37	72.6	0	29.17
16	106	700	11.26	275	14.52	35.27	66.47	0	29.21
16	106	800	12.07	286.4	17.41	38.09	59.58	0	29.23
16	106	900	12.87	297.3	18.43	40.36	56.74	0	29.24
16	106	1000	12.68	292.1	18.94	43.45	46.51	0	29.24
16	106	1100	14.02	299.9	20.09	45.6	43.39	0	29.25
16	106	1200	14.41	304.2	17.8	47.34	41.3	0	29.25
16	106	1300	13.51	291.7	19.34	50.4	39.15	0	29.24
16	106	1400	15.13	292.4	18.15	51.53	31.42	0	29.25
16	106	1500	15.5	314.8	16.14	52.34	29.19	0	29.24
16	106	1600	14.61	337	15.17	52.03	35.28	0	29.24
16	106	1700	14.71	339.5	13.92	50.11	36.19	0	29.26
16	106	1800	14.17	343.4	11.36	48.43	37.74	0	29.26
16	106	1900	8.62	351.2	10.11	45.26	43.14	0	29.25
16	106	2000	3.422	359	9.33	40.48	52.77	0	29.25
16	106	2100	1.531	235.6	14.83	36.18	71.1	0	29.26
16	106	2200	2.276	262.7	19.19	35.98	69.18	0	29.25
16	106	2300	5.06	305.2	12.89	38.3	58.46	0	29.27
17	107	0	3.683	306.6	11.01	36.72	66.64	0	29.28
17	107	100	4.109	325.1	14.43	34.25	75.6	0	29.27
17	107	200	2.274	314.3	14.53	31.48	90.9	0	29.27
17	107	300	3.737	344.7	7.94	30.19	92.6	0	29.27
17	107	400	3.685	18.92	5.799	27.85	100.2	0	29.27
17	107	500	5.272	31.09	10.68	27.82	100.2	0	29.26
17	107	600	3.074	170.9	8.95	27.23	100.3	0	29.29
17	107	700	3.97	154.8	12.2	31.65 (4)	100.1	0	29.33
17	107	800	3.818	247.4	27.15	37.46 (4)	88.8	0	29.37
17	107	900	3.023	173.6	39.27	43.26 (4)	75	0	29.4

Day	DATE JD	TIME 24H	WS MPH	WD Deg	SIGMA Deg	AT DegF	RH %	RN inch	BP inHg
17	107	1000	4.781	140.3	50.62	47.31	67.62	0	29.39
17	107	1100	7.29	242.3	14.78	47.88	68.72	0	29.39
17	107	1200	5.007	245.2	50.4	52.57	57.68	0	29.38
17	107	1300	6.464	277.3	36.31	52.85	56.24	0	29.36
17	107	1400	5.271	333.4	42.69	55.03	53.65	0	29.33
17	107	1500	6.922	50.51	31	56.63	52.97	0	29.31
17	107	1600	6.886	45.07	21.67	54.29	55.83	0	29.29
17	107	1700	10.73	19.8	14.96	50.01 (4)	63.68	0	29.28
17	107	1800	11.43	355.7	9.49	44.28 (4)	67.66	0	29.29
17	107	1900	8.94	354.8	11.95	41.82	68.29	0	29.3
17	107	2000	4.712	339.5	11.87	41.37	72.4	0	29.3
17	107	2100	4.361	310.6	15.58	41.36	74.9	0	29.33
17	107	2200	4.867	332.3	10.36	40.7	79	0	29.33
17	107	2300	4.204	345.9	8.7	39.55	81	0	29.33
18	108	0	4.374	353.1	5.792	36.39	87.3	0	29.31
18	108	100	6.048	11.41	4.009	34.67	93	0	29.31
18	108	200	5.547	18.4	4.512	32.79	98.9	0	29.32
18	108	300	0.309	107.7	6.13	30.27	100.3	0	29.33
18	108	400	2.561	171.3	7.09	29.08	100.3	0	29.33
18	108	500	3.1	164.1	6.293	28.8	100.2	0	29.35
18	108	600	4.044	154.2	7.43	29.16	100.2	0	29.35
18	108	700	4.279	188	9.04	33.85 (4)	100.3	0	29.38
18	108	800	2.858	197.1	21.65	40.2 (4)	90.4	0	29.41
18	108	900	4.361	253.3	23.16	46.43 (4)	75.5	0	29.44
18	108	1000	3.438	160.1	42.97	49.89	64.33	0	29.43
18	108	1100	6.147	82.5	36.58	53.7	55.68	0	29.43
18	108	1200	5.432	152.5	57.75	56.84	50.06	0	29.41
18	108	1300	6.909	94.1	44.72	60.45	45.68	0	29.37
18	108	1400	5.555	140.5	40.06	60.16	45.2	0	29.34
18	108	1500	6.691	119.3	26.03	61.72	43.98	0	29.31
18	108	1600	8.36	124.2	12.55	61.78	39.98	0	29.24
18	108	1700	7.45	140.8	14.31	61.71	44.83	0	29.21
18	108	1800	8.77	130.3	12.88	60.93	53.58	0	29.18
18	108	1900	11.8	145.6	11.89	59.27	62.72	0	29.13
18	108	2000	8.09	159.3	12.7	57.34	70.2	0	29.13
18	108	2100	11.01	156.1	12.69	59.24	65.53	0	29.09
18	108	2200	12.24	170.6	12.51	58.04	69.67	0	29.06
18	108	2300	16.1	176	10.96	57.52	73.2	0	29.04
19	109	0	19.08	174.7	9.61	57.35	80.8	0	29.02
19	109	100	20.07	177.3	11.31	54.36	95.7	0.01	28.99
19	109	200	23.48	180.5	8.23	52.31	100.3	0	28.96
19	109	300	17.73	180.3	8.49	51.71	100.3	0	28.95
19	109	400	17.51	176.7	8.58	52.22	100.3	0	28.94
19	109	500	14.73	171.1	9.53	52.6	100.3	0	28.93
19	109	600	12.89	168.5	10.09	54.08	100.3	0	28.92
19	109	700	14.7	176.3	8.71	53.65	100.3	0	28.94
19	109	800	12.17	185.7	11.91	53.28	100.3	0	28.95
19	109	900	7.42	173.1	13.09	56.76	100.3	0	28.96
19	109	1000	8.24	191.2	13.87	61.29	96.5	0	28.98
19	109	1100	14.23	245.5	11.68	63.94	71.4	0	28.98
19	109	1200	15.55	260.9	11.69	65	64.95	0	29
19	109	1300	15.04	265.2	15.17	68.31	57.98	0	29.02
19	109	1400	17.28	265.5	11.98	68.41	54.09	0	29.04
19	109	1500	18.28	263.7	11.59	67.42	53.91	0	29.06
19	109	1600	15.49	293.3	16.64	64.24	58.96	0	29.07
19	109	1700	16.77	275.7	14.41	61.84	60.63	0	29.1
19	109	1800	15.34	289.4	16.25	57.97	65.54	0	29.13
19	109	1900	16.79	293.9	15.43	53.8	71.1	0	29.14

Day	DATE JD	TIME 24H	WS MPH	WD Deg	SIGMA Deg	AT DegF	RH %	RN inch	BP inHg
19	109	2000	9.81	289.7	16.36	52.77	77.1	0	29.17
19	109	2100	9.62	276.3	13.57	51.79	81.9	0	29.18
19	109	2200	9.93	284.8	14.89	51.17	85.1	0	29.19
19	109	2300	12.41	306.3	13.88	46.59	100.2	0	29.21
20	110	0	9.02	294.1	15.25	44.49	100.3	0	29.23
20	110	100	8.16	283.3	15.6	44.43	100.3	0	29.24
20	110	200	9.91	298.9	15.67	44.12	95.8	0	29.25
20	110	300	7.96	289.5	16.76	43.35	92.6	0	29.26
20	110	400	8.83	303.1	14.25	42.72	90.7	0	29.28
20	110	500	8.99	303.9	15.34	42.28	90.3	0	29.3
20	110	600	7.88	291.4	15.72	41.61	90.9	0	29.32
20	110	700	7.3	310.8	14.08	40.99	95.3	0	29.33
20	110	800	8.14	316.3	15.01	41.17	94.4	0	29.36
20	110	900	8.91	331.7	19.21	43.42	89.4	0	29.39
20	110	1000	10.14	354.2	17.94	44.85	84.9	0	29.39
20	110	1100	7.43	340.5	29.95	46.14	81.7	0	29.4
20	110	1200	5.256	338.5	45.24	49.17	76	0	29.42
20	110	1300	4.707	327.3	53.09	52.61	69.74	0	29.41
20	110	1400	7.1	235	38.57	53.63	68.21	0	29.42
20	110	1500	5.598	123.3	32.8	52.7	70.6	0	29.39
20	110	1600	5.556	106.6	25.6	52.54	71.7	0	29.38
20	110	1700	5.138	89.3	24.28	52.07	70.8	0	29.36
20	110	1800	6.041	74.7	12.89	50.97	76.4	0	29.33
20	110	1900	4.975	71.3	13.64	49.35	80.8	0	29.32
20	110	2000	5.437	70.8	9.08	48.13	84.3	0	29.29
20	110	2100	3.379	18.57	23.13	47.03	87.1	0	29.29
20	110	2200	1.869	339.7	8.65	46.18	92.5	0	29.28
20	110	2300	2.852	17.75	15.09	46.94	95.2	0	29.28
21	111	0	4.996	69.88	12.78	47.51	94.6	0	29.26
21	111	100	3.143	72.5	14.21	47.7	94.8	0	29.24
21	111	200	3.673	169.2	17.07	48.18	94.3	0	29.23
21	111	300	1.907	156.1	20	45.94	99.1	0	29.21
21	111	400	4.343	131.1	8.88	45.18	99.7	0	29.18
21	111	500	6.334	135.1	9.58	48.32	89.3	0	29.15
21	111	600	5.401	139.6	20.47	49.55	88.3	0	29.14
21	111	700	7.56	156.5	13.73	54.09	79.6	0	29.12
21	111	800	11.27	175.6	8.59	55.29	79.6	0	29.1
21	111	900	12	183.2	9.15	58.26	76.5	0	29.07
21	111	1000	16.28	160.8	14.63	61.7 (4)	69.6	0	29.03
21	111	1100	14.51	167.6	12.45	55.46 (4)	97.8	0.03	29.01
21	111	1200	16.69	148.2	12.83	56.47	100.3	0	28.95
21	111	1300	18.7	169.4	12.5	56.25	100.1	0	28.94
21	111	1400	21.58	181.4	9.26	55.19	100.3	0	28.94
21	111	1500	18.31	182.3	8.79	55.39 (4)	100.3	0	28.94
21	111	1600	21.12	178.4	8.52	60.7 (4)	97.1	0	28.94
21	111	1700	18.15	178.8	9.08	63.05	91.7	0	28.94
21	111	1800	16.58	181.1	8	60.56	96.3	0	28.94
21	111	1900	14.82	179	8.78	57.58	100.4	0	28.94
21	111	2000	12	179.4	12.24	56.62	100.3	0	28.97
21	111	2100	10.75	181.3	9.91	55.29	100.3	0	28.98
21	111	2200	11.66	175.3	9.64	54.74	100.3	0.03	28.99
21	111	2300	10.71	218.8	17.31	54.84	97.6	0.05	29
22	112	0	8.8	261.6	12.37	55.75	89.2	0	29.02
22	112	100	17.21	254.5	10.89	54.8	79.3	0	29.03
22	112	200	10.74	267.7	19.7	51.2	80.5	0	29.04
22	112	300	9.74	262.4	15.89	49.32	85.7	0	29.05
22	112	400	5.732	252	14.1	48.23	91.4	0	29.05
22	112	500	7.65	248.9	13.43	49.23	90.1	0	29.05

Day	DATE JD	TIME 24H	WS MPH	WD Deg	SIGMA Deg	AT DegF	RH %	RN inch	BP inHg
22	112	600	10.01	263.7	10.97	49.91	86.3	0	29.07
22	112	700	7.39	279.1	17.16	49.67	85.4	0	29.08
22	112	800	8.83	302.6	16.32	48.84	88.2	0	29.1
22	112	900	8.57	294.5	17.55	47.79	92.6	0	29.1
22	112	1000	9.07	279.8	14.57	47.74	92.8	0	29.1
22	112	1100	12.42	289.1	17.1	46.66	94.1	0	29.12
22	112	1200	11.88	286.5	15.95	44.96	98.6	0	29.15
22	112	1300	13.23	272.7	14.39	44.77	97.2	0	29.15
22	112	1400	10.51	275.7	15.45	44.86	95.2	0	29.16
22	112	1500	11.59	295.7	16.23	43.52	99.6	0	29.16
22	112	1600	11.66	287.2	16.66	43.79	99.1	0	29.17
22	112	1700	13.84	281.1	14	43.6	97.1	0	29.18
22	112	1800	13.35	272.1	13.39	43.94	89.7	0	29.2
22	112	1900	12.57	269.7	12	43.78	87.7	0	29.23
22	112	2000	12.99	273.9	14.39	43.3	88.1	0	29.24
22	112	2100	11.39	275.2	14.76	41.98	92.5	0	29.25
22	112	2200	10.08	285.8	17.46	41.34	95.6	0	29.26
22	112	2300	8.96	288.3	15.87	40.46	99.8	0	29.26
23	113	0	10.28	299.2	15.41	41.39	95.6	0	29.27
23	113	100	9.56	305.2	14.74	40.26	95.6	0	29.27
23	113	200	6.959	297	14.94	39.14	97.8	0	29.26
23	113	300	5.849	280.4	15.24	37.79	100.2	0	29.26
23	113	400	5.13	282.7	15.12	36.86	100.2	0	29.26
23	113	500	6.503	265.2	10.11	35.83	100.3	0	29.25
23	113	600	8.29	261.3	7.37	35.36	100.3	0	29.25
23	113	700	9.28	276	12.97	39.37	94.9	0	29.28
23	113	800	14.25	299	16.57	41.36	79	0	29.31
23	113	900	11.85	293.6	19	41.97	78.1	0	29.32
23	113	1000	11.45	298.9	16.15	41.88	79.9	0	29.32
23	113	1100	12.42	295.4	18.76	44.17	74.8	0	29.33
23	113	1200	12.39	296	18.92	45.49	61.91	0	29.33
23	113	1300	11.96	293.8	21.06	48.65	50.31	0	29.33
23	113	1400	13.77	307.5	19.07	49.09	48.86	0	29.32
23	113	1500	12.81	315.8	20.73	49.39	49.88	0	29.3
23	113	1600	11.5	329.1	16.83	49.05	50.67	0	29.28
23	113	1700	10	336.2	16.64	47.67	52.68	0	29.26
23	113	1800	9.4	352.5	11.27	45.36	55.49	0	29.24
23	113	1900	8.66	7.99	8.13	42.45	59.27	0	29.21
23	113	2000	5.794	5.422	6.859	40.01	65.54	0	29.21
23	113	2100	3.502	9.19	7.93	38.93	69.87	0	29.22
23	113	2200	4.636	52	10.15	38.4	75.5	0	29.2
23	113	2300	3.143	63.35	15.33	36.81	79.1	0	29.19
24	114	0	2.593	64.89	23.94	34.56	89.5	0	29.16
24	114	100	1.61	196.8	13.91	33.62	96.3	0	29.15
24	114	200	2.12	197.4	15.25	33.69	97.9	0	29.14
24	114	300	2.38	315.4	18.88	33.54	100.3	0	29.12
24	114	400	2.837	256.1	21.28	33.78	97.3	0	29.12
24	114	500	2.897	296.1	13.4	33.74	98.9	0	29.11
24	114	600	4.351	347.8	6.567	32.14	100.3	0	29.12
24	114	700	6.907	0.835	8.45	34.56	100.1	0	29.14
24	114	800	8.47	2.989	15.19	38.6	92.7	0	29.17
24	114	900	6.962	347	22.81	40.38	83.7	0	29.18
24	114	1000	7.32	304.3	24.31	43.22	75.8	0	29.19
24	114	1100	7.12	335	31.88	47.41	68.47	0	29.19
24	114	1200	9.29	0.638	25.5	49.03	63.77	0	29.18
24	114	1300	10.58	2.803	20.18	50.11	59.89	0	29.15
24	114	1400	9.1	8.65	26.17	51.88	52.9	0	29.14
24	114	1500	10.5	0.058	19.43	52.02	48.08	0	29.12

Day	DATE JD	TIME 24H	WS MPH	WD Deg	SIGMA Deg	AT DegF	RH %	RN inch	BP inHg
24	114	1600	11.03	356.1	17.5	51.54	45.63	0	29.11
24	114	1700	11.45	354.3	14.81	50.28	39.85	0	29.11
24	114	1800	11.25	355.1	10.84	48.28	40.85	0	29.11
24	114	1900	8.71	347.2	10.04	44.63	49.14	0	29.09
24	114	2000	5.876	348.2	6.311	39.81	63.41	0	29.09
24	114	2100	3.014	344.4	6.88	37.18	74.8	0	29.09
24	114	2200	0.528	317	6.707	34.1	93.8	0	29.1
24	114	2300	1.035	232.7	9.66	32.36	97.1	0	29.1
25	115	0	1.103	143.6	5.292	30.82	100.1	0	29.11
25	115	100	1.222	97.8	6.427	29.52	100.3	0	29.1
25	115	200	1.821	167.6	5.442	28.9	100.3	0	29.1
25	115	300	4.433	167	7.11	30.24	100.2	0	29.1
25	115	400	6.104	174.2	5.905	30.72	100.2	0	29.11
25	115	500	6.684	180	6.349	30.15	100.3	0	29.12
25	115	600	7.71	181	6.362	31.32	100.3	0	29.14
25	115	700	10.06	183.6	7.08	35.11	99.9	0	29.19
25	115	800	9.71	181.8	8.11	38.92 (4)	87.5	0	29.22
25	115	900	8.59	191.7	10.68	44.77 (4)	68.04	0	29.24
25	115	1000	7.87	184.4	13.75	50.59 (4)	53.66	0	29.26
25	115	1100	9.48	183.4	13.73	54.52	43.81	0	29.27
25	115	1200	8.05	177.1	26.98	57.12	42.97	0	29.25
25	115	1300	7.7	181.5	30.08	59.21	41.73	0	29.23
25	115	1400	5.068	154.3	50.53	61.69	40.02	0	29.22
25	115	1500	6.449	179.9	34.4	61.53	39.3	0	29.2
25	115	1600	7.45	167.7	22.72	62.25	37.66	0	29.18
25	115	1700	10.5	222	22.62	58.51 (4)	45.21	0	29.17
25	115	1800	11.69	286.3	20.01	50.99 (4)	78.9	0.02	29.2
25	115	1900	6.172	318.4	13.01	49.13	83.3	0	29.21
25	115	2000	3.793	334.8	10.37	47.66	83.2	0	29.22
25	115	2100	1.941	330.4	14.91	45.93	88.2	0	29.24
25	115	2200	5.105	289.2	18.21	45.73	88.7	0	29.25
25	115	2300	5.592	284.7	14.86	46.15	90.8	0	29.27
26	116	0	4.129	259.5	14.66	44.72	100.3	0	29.28
26	116	100	6.653	273.2	15.13	45	99	0	29.29
26	116	200	8.22	275.3	16.22	44.2	98.8	0	29.3
26	116	300	7.61	277	14.38	43.82	99.9	0	29.3
26	116	400	7.53	273.5	13.14	43.56	99.7	0	29.32
26	116	500	7.29	278.4	15.14	43	95.4	0	29.34
26	116	600	8.61	266.9	10.91	42.71	94.9	0	29.36
26	116	700	8.5	260.7	10.16	43.49	92.3	0	29.4
26	116	800	10.16	287.1	16.6	45.42	85.4	0	29.43
26	116	900	9.6	305.5	22.93	47.65	79	0	29.46
26	116	1000	7.22	290.8	35.3	51.38	68.14	0	29.48
26	116	1100	7.48	284.8	40.11	53.65	57.15	0	29.48
26	116	1200	6.432	286.1	48.39	56.64	50.3	0	29.48
26	116	1300	6.784	209.8	38.86	58.79	45.32	0	29.45
26	116	1400	6.153	153.5	41	57.95	43.39	0	29.44
26	116	1500	8.29	210	24.73	56.79	45.22	0	29.42
26	116	1600	7.66	266.3	25.49	57.22	52.04	0	29.41
26	116	1700	8.56	315.1	17.54	53.86	66.19	0	29.39
26	116	1800	9.9	21.49	10.71	51.73	80.9	0	29.36
26	116	1900	8.82	37.61	10.43	49.76	89	0	29.36
26	116	2000	7.02	29.4	10.59	47.57	95.1	0	29.36
26	116	2100	6.2	3.234	8.35	46.61	92.5	0	29.36
26	116	2200	8.79	359.5	7.62	45.5	87.9	0	29.36
26	116	2300	7.64	9.01	8.78	44.79	86.1	0	29.34
27	117	0	2.885	311.2	15.22	44.23	89.9	0	29.33
27	117	100	3.005	238.9	9.9	42.61	100.2	0	29.31

Day	DATE JD	TIME 24H	WS MPH	WD Deg	SIGMA Deg	AT DegF	RH %	RN inch	BP inHg
27	117	200	3.975	198.1	11.09	42.66	100.3	0	29.29
27	117	300	3.279	182.8	20.3	42.16	100.3	0	29.29
27	117	400	3.737	162.4	36.5	41.85	100.2	0	29.27
27	117	500	2.523	61.86	19.89	42.05	100.2	0	29.26
27	117	600	3.726	128.9	8.34	43.74	98.9	0	29.27
27	117	700	5.522	168.2	11.93	47.82	88	0	29.29
27	117	800	7.98	179.9	9.31	51.38	75.8	0	29.3
27	117	900	7.71	173.1	12.33	55.41	66.11	0	29.31
27	117	1000	9.94	175.7	11.42	59.51	56.53	0	29.31
27	117	1100	9.13	168.3	18.16	64.07	48.99	0	29.29
27	117	1200	7.81	186.7	13.81	67.42	46.77	0	29.25
27	117	1300	7.19	150.5	26.68	69.71	44.56	0	29.22
27	117	1400	9.36	160	19.69	73.2	38.15	0	29.19
27	117	1500	13.04	178.3	11.61	74.3	37.3	0	29.16
27	117	1600	13.66	177.4	10.57	74.8	38.24	0	29.12
27	117	1700	14.24	176.5	9.32	73.1	41.47	0	29.1
27	117	1800	14.62	208.2	22.07	68.59 (4)	49.34	0	29.1
27	117	1900	10.94	339.8	11.32	56.84 (4)	98	0.06	29.13
27	117	2000	7.79	4.759	8.15	54.45	100.3	0.02	29.12
27	117	2100	3.308	42.61	18.18	53.58	100.3	0.14	29.14
27	117	2200	4.378	5.126	14.93	52.18	100.3	0.23	29.15
27	117	2300	9.06	303.9	14.54	49.01	100.3	0.22	29.16
28	118	0	5.354	241	14.27	47.74	100.3	0.05	29.15
28	118	100	5.382	205.8	15.01	46.96	100.3	0.01	29.15
28	118	200	5.817	177.3	9.03	45.43	100.3	0	29.14
28	118	300	6.107	174.8	9.25	46.46	100.3	0	29.15
28	118	400	3.142	176.8	17.13	46.88	100.3	0	29.15
28	118	500	2.203	186.5	17.34	46.53	100.3	0	29.15
28	118	600	2.844	297.6	36.68	45.29	100.3	0	29.16
28	118	700	5.265	279.4	24.1	46.72	95.6	0	29.19
28	118	800	8.99	261	11.87	50.69	84.5	0	29.24
28	118	900	11.06	238.7	11.99	52.18	80.1	0	29.25
28	118	1000	12.03	251.7	14.57	54.87	68.99	0	29.25
28	118	1100	15.13	261.5	13.83	57.04	58.42	0	29.27
28	118	1200	16.79	258	11.32	58.56	52.22	0	29.26
28	118	1300	15.35	253.6	13.68	58.92	49.16	0	29.25
28	118	1400	14.79	246.2	11.93	59.1	48.99	0	29.25
28	118	1500	15.18	251.1	11.26	58.3	49.46	0	29.25
28	118	1600	12.21	259.5	13.75	58.45	49.88	0	29.25
28	118	1700	10.28	276.7	17.17	57.23	47.26	0	29.25
28	118	1800	12.85	288.6	16.73	55.55	46.2	0	29.25
28	118	1900	11.25	296.3	15.07	52.06	53.66	0	29.25
28	118	2000	7.89	305.8	12.84	49.12	63.78	0	29.26
28	118	2100	2.128	332	8.97	44.62	79.6	0	29.25
28	118	2200	3.138	201.6	9.62	44.53	81.7	0	29.25
28	118	2300	5.457	186.6	6.565	44.49	80.8	0	29.25
29	119	0	6.873	178	4.896	44.73	80	0	29.24
29	119	100	6.233	174.1	6.637	45.1	82.7	0	29.23
29	119	200	6.875	178.1	6.935	44.88	85	0	29.22
29	119	300	7.26	185	9.21	45.03	84	0	29.22
29	119	400	5.975	187.2	6.027	44.73	84.9	0	29.23
29	119	500	5.364	188.1	7.07	44.01	84.9	0	29.23
29	119	600	6.879	198.8	9.2	45	83	0	29.24
29	119	700	7.28	216.1	10.71	46.36 (4)	81.4	0	29.27
29	119	800	10.58	234.5	11.49	51.74 (4)	68.33	0	29.31
29	119	900	12.02	270.4	15.99	54.33	59.32	0	29.32
29	119	1000	12.7	264.9	13.53	55.13	56.72	0	29.32
29	119	1100	12.96	263.4	11.17	54.97	57.05	0	29.3

Day	DATE JD	TIME 24H	WS MPH	WD Deg	SIGMA Deg	AT DegF	RH %	RN inch	BP inHg
29	119	1200	10.59	268.9	14.03	54.25	56.96	0	29.31
29	119	1300	11.43	278.2	17.5	55.08	55.02	0	29.31
29	119	1400	12.33	290.2	18.1	56.36	52.28	0	29.31
29	119	1500	13.78	298.3	18.39	57.63	48.99	0	29.31
29	119	1600	12.34	346.8	17.68	54.97	65.15	0	29.31
29	119	1700	13.78	2.585	10.32	50.8	75.9	0	29.32
29	119	1800	10.64	2.801	10.31	47.97	80.2	0	29.31
29	119	1900	6.825	359.7	12.01	46.54	82.3	0	29.32
29	119	2000	4.315	4.129	10.73	45.37	86.4	0	29.33
29	119	2100	0.554	33.85	6.232	44.17	93.2	0	29.34
29	119	2200	1.27	36.58	19.74	41.24	100.3	0	29.34
29	119	2300	1.192	73.9	7.59	38.19	100.3	0	29.32
30	120	0	0.98	326.6	18.35	37.38	100.3	0	29.31
30	120	100	3.666	189	24.46	36.51	100.2	0	29.3
30	120	200	3.932	162.4	11.27	37.49	100.2	0	29.3
30	120	300	4.999	177.6	8.97	36.93	100.2	0	29.3
30	120	400	5.682	178.8	6.782	36.05	100.2	0	29.3
30	120	500	5.938	181.6	6.924	35.7	100.2	0	29.3
30	120	600	2.636	185.4	4.67	36.11	100.3	0	29.31
30	120	700	2.738	177.3	10.12	39.45	100.3	0	29.33
30	120	800	2.002	217.8	34.43	44.19	98.9	0	29.36
30	120	900	4.539	247	19.51	45.81	97.9	0	29.36
30	120	1000	4.372	238.8	22.26	46.01	94	0	29.34
30	120	1100	4.408	297.2	45.21	48.95	85.3	0	29.34
30	120	1200	6.4	67.57	37.54	52.12	71.5	0	29.34
30	120	1300	7.56	56.5	24.21	52.66	71.8	0	29.32
30	120	1400	7.9	32.2	28.38	53.66	69.79	0	29.31
30	120	1500	7.57	16.52	19.23	52.74	69.75	0	29.29
30	120	1600	8.16	16.39	12.65	51.99	69.19	0	29.28
30	120	1700	9.23	5.723	10.87	51.68	71.6	0	29.28
30	120	1800	10.33	357.2	10.61	51.08	78.5	0	29.28
30	120	1900	10.56	358.4	9.51	49.03	81.3	0	29.28
30	120	2000	7.91	351.7	8.86	46.75	87.1	0	29.28
30	120	2100	7.11	347.7	9.27	45.37	93.6	0	29.28
30	120	2200	5.885	342	9.16	44.86	95.5	0	29.28
30	120	2300	5.963	345.8	8.53	44.56	97	0	29.27
01-May	121	0	7.26	342.9	9.06	44.19	98.7	0	29.26
1	121	100	7.85	340.1	9.85	43.46	100.2	0	29.26
1	121	200	6.442	338.1	10.5	42.63	100.3	0	29.26
1	121	300	4.111	330.4	11	41.32	100.3	0	29.25
1	121	400	3.484	301.8	16.84	41.05	100.3	0	29.24
1	121	500	4.958	327.2	10.16	39.52	100.3	0	29.25
1	121	600	4.083	321.4	11.88	39.97	100.3	0	29.25
1	121	700	6.511	335.2	14.07	41.8	100.3	0	29.27
1	121	800	6.29	315.7	19.16	44.83	99.4	0	29.31
1	121	900	8.03	324.2	21.62	48.21	92.2	0	29.32
1	121	1000	7.68	323.8	25.07	51.85	85.2	0	29.33
1	121	1100	9.49	298.3	21.51	55.35	76.3	0	29.35
1	121	1200	9.39	333.9	23.77	56.6	66.57	0	29.33
1	121	1300	11	359.2	19.44	56.51	58.36	0	29.3
1	121	1400	11.03	7.71	17.89	58.7	50.57	0	29.28
1	121	1500	9.59	339.5	20.84	59.79	49	0	29.29
1	121	1600	7.01	22.87	30.51	61.2	48.59	0	29.27
1	121	1700	8.31	37.1	21.34	58.97	52.9	0	29.25
1	121	1800	8.05	31.17	15.75	56.87	57.54	0	29.24
1	121	1900	5.909	348.4	12.01	54.63 (4)	59.61	0	29.23
1	121	2000	5.741	359.5	9.36	49.56 (4)	72.2	0	29.22
1	121	2100	6.467	23.17	5.717	48.23	71.8	0	29.22

Day	DATE JD	TIME 24H	WS MPH	WD Deg	SIGMA Deg	AT DegF	RH %	RN inch	BP inHg
1	121	2200	6.403	33.99	6.538	48.28	69.1	0	29.21
1	121	2300	2.759	44.04	15.21	47.13	74	0	29.21
2	122	0	2.076	17.13	15.72	44.97	83.8	0	29.19
2	122	100	3.236	4.208	13.32	42.24	94	0	29.15
2	122	200	3.089	318.9	17.84	41.03	99.8	0	29.15
2	122	300	2.6 (1)	122.8	18.29	40.59	100.1	0	29.15
2	122	400	2.576 (1)	47.11	19.38	38.41	100.3	0	29.12
2	122	500	2.486 (1)	10.75	26.74	37.08	100.3	0	29.09
2	122	600	2.673	213.2	37.9	38.64	100.3	0	29.12
2	122	700	2.616	37.35	30.63	41.82	100.3	0	29.14
2	122	800	1.736	351.5	24.41	46.75 (4)	98.6	0	29.16
2	122	900	5.431	95.1	20.38	53.42 (4)	73.4	0	29.18
2	122	1000	10.03	99.2	12.89	56.26	62.41	0	29.18
2	122	1100	10.33	113.6	19.44	59.27	54.03	0	29.18
2	122	1200	10.61	120.4	19.31	61.34	48.18	0	29.18
2	122	1300	9.42	127.1	23.91	62.2	46.85	0	29.18
2	122	1400	8.77	107.9	22.78	63.04	45.44	0	29.17
2	122	1500	7.32	117.5	28.78	61.77	45.37	0	29.16
2	122	1600	7.02	116.5	21.36	61.27	45.75	0	29.16
2	122	1700	5.957	97.1	18.94	60.14	46.79	0	29.15
2	122	1800	5.569	147.3	23.78	59.69	47.61	0	29.16
2	122	1900	5.186	209.4	37.47	55.57	59.69	0	29.16
2	122	2000	7.51	169.8	11.96	51.5	69.29	0	29.16
2	122	2100	6.022	162.1	10.2	49.55	73.2	0	29.17
2	122	2200	8.02	182.1	6.27	46.87	86.2	0	29.16
2	122	2300	8.46	184.6	6.09	45.89	91.8	0	29.16
3	123	0	7.85	190.9	7.7	45.68	94.3	0	29.17
3	123	100	7.55	191.3	7.5	45.5	95.6	0	29.18
3	123	200	5.993	192.8	8.3	44.42	100.1	0	29.18
3	123	300	6.965	184.8	5.39	44.15	100.3	0	29.19
3	123	400	6.404	181.8	8.87	43.87	100.3	0	29.21
3	123	500	4.796	179.3	9.72	43.71	99	0	29.22
3	123	600	6.964	183.1	6.395	43.87	98.3	0	29.24
3	123	700	7.6	180.3	7.08	46.42 (4)	92.6	0	29.26
3	123	800	6.264	198.6	12.7	52.91 (4)	70.9	0	29.32
3	123	900	6.607	281.1	28.82	58.74 (4)	57.99	0	29.35
3	123	1000	8.84	331.6	17.88	61.9	52.81	0	29.36
3	123	1100	10.81	324.3	17.65	62.68	48.96	0	29.36
3	123	1200	11.9	315.8	16.11	63.69	45.16	0	29.35
3	123	1300	12.23	327.2	14.92	64.08	43.91	0	29.34
3	123	1400	10.75	330.5	18.68	64.47	42.3	0	29.35
3	123	1500	10.36	331.2	18.19	64.27	41.53	0	29.34
3	123	1600	11.3	325	15.97	63.53	41.34	0	29.34
3	123	1700	10.88	314.5	17.34	63.18	41.42	0	29.33
3	123	1800	9.39	297.8	17.14	62.68	41.44	0	29.34
3	123	1900	6.528	311.8	15.46	59.29 (4)	44.6	0	29.33
3	123	2000	4.226	347.5	7.82	53.3 (4)	54.75	0	29.33
3	123	2100	3.062	312.3	14.94	49.42	65.66	0	29.33
3	123	2200	4.039	295.7	14	51.17	59.86	0	29.33
3	123	2300	4.277	280.9	15.44	49.94	62.49	0	29.33
4	124	0	3.878	241.8	17.39	48.1	66.79	0	29.34
4	124	100	3.759	235.1	17.12	45.32	74.7	0	29.33
4	124	200	6.117	177.7	8.89	42.97	88.2	0	29.33
4	124	300	4.98	164.4	12.01	41.67	88.4	0	29.34
4	124	400	6.393	180.8	4.847	40.85	91.8	0	29.34
4	124	500	6.46	173.6	5.299	40.3	99.7	0	29.35
4	124	600	6.284	180.4	6.934	39.82	100.3	0	29.37
4	124	700	8.59	185.6	7.26	43.89	96.8	0	29.42

Day	DATE JD	TIME 24H	WS MPH	WD Deg	SIGMA Deg	AT DegF	RH %	RN inch	BP inHg
4	124	800	9.11	185	8.2	48.18 (4)	81.7	0	29.45
4	124	900	6.435	190.1	16.21	54.04 (4)	62.02	0	29.46
4	124	1000	3	267.9	44.86	62.09 (4)	41.63	0	29.48
4	124	1100	4.732	214.2	50.8	63.8	39.14	0	29.47
4	124	1200	5.849	181.1	53.99	65.29	38.11	0	29.45
4	124	1300	5.539	190.1	52.93	65.35	37.72	0	29.42
4	124	1400	5.331	156.8	43.78	66.13	36.07	0	29.4
4	124	1500	5.418	246.9	57.8	67.49	36	0	29.37
4	124	1600	4.102	266	49.43	66.93	36.7	0	29.36
4	124	1700	3.168	325.6	32.36	64.77	37.96	0	29.34
4	124	1800	2.312	24.11	28.45	62.7	43.21	0	29.32
4	124	1900	7.5	344	13.32	59.47	51.65	0	29.32
4	124	2000	7.66	351.6	11.87	55.66	54.8	0	29.31
4	124	2100	4.882	16.11	22.08	53.31	58.22	0	29.3
4	124	2200	3.786	137.6	22.64	52.79	60.87	0	29.29
4	124	2300	1.943	105.9	19.66	51.76	71.2	0	29.28
5	125	0	3.332	201.6	29.21	51.7	75	0	29.28
5	125	100	6.29	187.2	14.26	52.08	82.2	0	29.27
5	125	200	7.09	155.3	12.63	51.74	91.2	0	29.25
5	125	300	5.016	184	23.68	50.23	97.2	0	29.23
5	125	400	5.465	173.3	9.32	48.94	100.3	0	29.22
5	125	500	4.905	172.9	10.67	48.34	100.3	0	29.21
5	125	600	4.005	145.3	11.21	48.95	100.3	0	29.22
5	125	700	2.907	184.2	16.65	50.12	100.3	0	29.24
5	125	800	5.369	268.2	20.03	53.08	82	0	29.25
5	125	900	8.79	310.2	18.36	54.91	68.73	0	29.27
5	125	1000	7.55	317.5	24.23	56.96	63.11	0	29.28
5	125	1100	7.91	314.6	24.91	60.06	57.23	0	29.29
5	125	1200	11.01	339.8	16.74	62.07	56.49	0	29.28
5	125	1300	13.82	336.3	16.25	62.95	57.11	0	29.26
5	125	1400	15.48	337	14.63	63.75	56.23	0	29.26
5	125	1500	15.1	338.4	14.59	64.39	54.65	0	29.24
5	125	1600	14.77	338	13.34	64.96	51.65	0	29.22
5	125	1700	12.13	333.7	14.62	64.77	49.6	0	29.22
5	125	1800	10.36	331	12.71	63.6	51.35	0	29.2
5	125	1900	7.88	334.9	10.8	61.49	53.63	0	29.2
5	125	2000	7.18	313.8	12.35	57.79	58.23	0	29.2
5	125	2100	7.72	286.1	16.48	55.46	69.86	0	29.21
5	125	2200	5.844	280.5	18.04	53.1	77.7	0	29.2
5	125	2300	6.548	282.5	17.33	52.67	79.5	0	29.2
6	126	0	4.967	270.6	17.78	51.29	83.6	0	29.2
6	126	100	6.306	305.2	15.47	51.51	85	0	29.2
6	126	200	7.63	289.3	15.43	50.24	91.2	0	29.2
6	126	300	6.721	274.2	11.48	47.75	98.8	0	29.2
6	126	400	7.28	274.8	15.85	47.37	100.2	0	29.21
6	126	500	11.63	308	15.24	48.65	99.8	0	29.23
6	126	600	13	326.9	12.72	48.26	100	0	29.26
6	126	700	11.42	340.9	11.66	48.04	91.9	0	29.3
6	126	800	13.09	330.3	12.86	50.25	80.5	0	29.35
6	126	900	13.62	338.3	13.95	51.21	66.51	0	29.37
6	126	1000	14.56	332.7	16.79	53.41	52.68	0	29.39
6	126	1100	15.68	332.9	18.41	55.02	46.55	0	29.39
6	126	1200	16.4	334.4	15.78	56.08	47.55	0	29.38
6	126	1300	16.29	331.4	14.89	56.39	45.57	0	29.38
6	126	1400	18.72	330.9	13.88	56.89	43.62	0	29.39
6	126	1500	18.43	335.8	15.19	57.53	45.34	0	29.38
6	126	1600	16.54	328.2	14.73	57.64	45.78	0	29.37
6	126	1700	15.59	330.2	13.64	57.73	43.62	0	29.37

Day	DATE JD	TIME 24H	WS MPH	WD Deg	SIGMA Deg	AT DegF	RH %	RN inch	BP inHg
6	126	1800	13.84	334.1	13.2	57.02	44.1	0	29.36
6	126	1900	13.08	332.9	10.91	54.67	44.2	0	29.35
6	126	2000	10.1	330.2	10.79	51.36	48.21	0	29.35
6	126	2100	6.197	327.2	10.03	48.55	53.44	0	29.35
6	126	2200	4.928	325	9.28	45.74	58.94	0	29.33
6	126	2300	3.503	278.2	13.28	44.15	65.16	0	29.34
7	127	0	3.357	285.6	14.08	42	72.6	0	29.32
7	127	100	4.431	307.2	13.06	41.78	72.4	0	29.32
7	127	200	5.235	320.5	10.9	41.26	75.2	0	29.32
7	127	300	3.655	325	10.92	38.49	83.1	0	29.32
7	127	400	2.725	313.1	13.04	36.69	90.5	0	29.32
7	127	500	2.574	318	16.01	36.49	90	0	29.33
7	127	600	2.578	225.8	20.02	37.57 (4)	89.8	0	29.35
7	127	700	5.686	190.6	11.41	42.61 (4)	86.2	0	29.41
7	127	800	7.06	306.3	33.57	48.28 (4)	68.83	0	29.45
7	127	900	11.68	325.5	15.36	50.87	62.11	0	29.45
7	127	1000	11.3	332.5	15.1	53.4	57.69	0	29.46
7	127	1100	11.44	331.9	18.75	55.57	51.6	0	29.46
7	127	1200	12.91	335.5	19.16	56.72	44.9	0	29.45
7	127	1300	13.88	342.8	14.87	55.51	41.42	0	29.44
7	127	1400	13.91	338.4	17.55	56.22	40.71	0	29.45
7	127	1500	15.57	335.1	15	56.21	36.73	0	29.45
7	127	1600	17.25	344.8	13.44	55.78	35.66	0	29.44
7	127	1700	15.08	339.1	13.01	54.68	35.71	0	29.44
7	127	1800	13.39	334.7	13.41	54.24	35.98	0	29.44
7	127	1900	9.94	337.7	11.07	52.4 (4)	38.11	0	29.43
7	127	2000	5.071	355.6	11.57	46.59 (4)	45.82	0	29.41
7	127	2100	4.639	16.55	8.72	42.68	56.66	0	29.4
7	127	2200	5.156	23.76	5.364	41.97	56.72	0	29.41
7	127	2300	5.54	5.28	8.58	40.47	60.11	0	29.42
8	128	0	6.582	349.8	6.241	37.72	71.3	0	29.43
8	128	100	6.623	9.79	5.156	36.31	78.5	0	29.43
8	128	200	5.669	351	6.522	35.16	80.8	0	29.43
8	128	300	5.983	354.5	7.03	34.6	84.1	0	29.43
8	128	400	5.669	346.7	6.875	33.3	85.9	0	29.44
8	128	500	5.767	351.8	7.8	32.4	83.4	0	29.44
8	128	600	5.333	347	7.64	33.57 (4)	80.6	0	29.45
8	128	700	8.02	344.6	11.7	39.26 (4)	73.9	0	29.51
8	128	800	10.28	358.1	13.77	43.01	65.53	0	29.53
8	128	900	11.24	344.4	15.68	46.09	56.53	0	29.53
8	128	1000	11.59	353.6	20.11	48.82	54.04	0	29.54
8	128	1100	11.11	347.7	19.82	50.46	53.28	0	29.54
8	128	1200	12.36	327.3	19.14	51.7	53.22	0	29.54
8	128	1300	12.83	317	16.52	52.32	52.99	0	29.53
8	128	1400	14.38	324.2	15.31	53.29	50.19	0	29.54
8	128	1500	13.6	334.6	15.58	54.57	47.3	0	29.54
8	128	1600	14.08	355.8	14.41	55.11	46.09	0	29.54
8	128	1700	13.54	358	12.7	54.63	45.88	0	29.53
8	128	1800	10.56	4.571	11.41	52.81	48.27	0	29.51
8	128	1900	6.191	358.8	9.49	50.76	53.75	0	29.49
8	128	2000	4.158	8.59	7.08	47.42	60.89	0	29.47
8	128	2100	1.975	333.3	6.883	45.75	66.89	0	29.47
8	128	2200	3.992	185.4	15.52	44.82	72.6	0	29.47
8	128	2300	3.862	156.1	11.42	43.4	78.9	0	29.46
9	129	0	4.803	181	7.48	42.26	79.8	0	29.46
9	129	100	5.755	169.7	8.82	43	79.4	0	29.46
9	129	200	3.794	164.7	14.66	41.27	86.9	0	29.44
9	129	300	5.435	160.6	10.81	40.35	87.4	0	29.43

Day	DATE JD	TIME 24H	WS MPH	WD Deg	SIGMA Deg	AT DegF	RH %	RN inch	BP inHg
9	129	400	4.229	170.4	12.89	39.27	90.9	0	29.41
9	129	500	4.75	150.5	13.01	38.47	94	0	29.4
9	129	600	5.307	180.9	8.25	38.02	94.3	0	29.43
9	129	700	6.754	179.6	8.04	42.95	89.8	0	29.49
9	129	800	4.786	167.7	15.98	47.03 (4)	77.2	0	29.49
9	129	900	4.694	92.5	17.66	52.98 (4)	63.68	0	29.48
9	129	1000	5.857	180.2	20.26	52.79	62.21	0	29.47
9	129	1100	5.064	203	21.7	56.19	58.13	0	29.45
9	129	1200	5.842	189.6	25.09	60.19	53.01	0	29.43
9	129	1300	10.02	128.1	17.16	63.84	42.12	0	29.42
9	129	1400	9.23	125.4	25.63	63.97	41.55	0	29.39
9	129	1500	12.01	113.8	13.25	65.24	39.12	0	29.36
9	129	1600	10.77	121	13.6	65.84	39.14	0	29.34
9	129	1700	8.89	127.3	11.54	65.12	40.76	0	29.33
9	129	1800	7.48	125.9	11.5	63.85	44.33	0	29.32
9	129	1900	7.34	140.6	14.7	62.55	46.64	0	29.29
9	129	2000	7.45	159.5	14.51	57.97	68.25	0	29.28
9	129	2100	10.95	132.2	10.16	56.59	73.8	0.03	29.26
9	129	2200	10.36	124.6	11.4	56.2	76.8	0	29.24
9	129	2300	8.36	154.9	13	56.4	75.9	0	29.22
10	130	0	5.64	142.9	11.39	52.88	98	0.13	29.22
10	130	100	9.41	98.5	12.07	51.72	100.3	0.03	29.19
10	130	200	12.3	105.8	10.2	51.24	100.3	0.03	29.17
10	130	300	10.52	129.2	11.44	52.08	100.3	0	29.15
10	130	400	6.37	148	14.35	52.6	100.3	0	29.14
10	130	500	8.07	143.2	15.13	52.74	100.3	0	29.13
10	130	600	8.08	161.5	11.88	52.61	100.3	0	29.14
10	130	700	13.44	174.1	9.98	53.62	100.3	0	29.15
10	130	800	13.24	175.3	8.27	54.2	100.3	0	29.15
10	130	900	14.57	179.6	8.12	54.64	100.3	0	29.14
10	130	1000	15.92	179.8	7.63	55.31	100.3	0	29.14
10	130	1100	15.07	179.7	8.48	57.56	100.3	0	29.15
10	130	1200	14.59	169.6	12.07	61.54	95.2	0	29.14
10	130	1300	14.9	180.9	14.22	63.83	89.5	0	29.12
10	130	1400	15.92	171.4	13.41	67.13	82.5	0	29.1
10	130	1500	15.5	147.5	15.25	67.57	80.3	0	29.07
10	130	1600	13.17	142.6	15.9	66.67	81.4	0	29.05
10	130	1700	13.26	142.5	13.26	65.41	83.6	0	29.03
10	130	1800	15.55	142.1	12.12	62.57	88.7	0	29.01
10	130	1900	12.6	147.6	13.6	60.23	93.5	0	29.04
10	130	2000	13.3	163.4	12.03	58.59	97.3	0	29.06
10	130	2100	14.74	140.4	11.12	56.58	100.2	0	29.03
10	130	2200	13.14	163	11.88	53.85	100.3	0.01	29.03
10	130	2300	11.32	140.6	11.36	53.62	100.3	0	29
11	131	0	12.8	139.1	11.23	53.47	100.3	0	28.98
11	131	100	9.64	154.8	13.9	53.01	100.3	0	28.97
11	131	200	9.4	156.8	12.88	51.87	100.3	0.06	28.96
11	131	300	6.352	135.3	18.02	51.45	100.3	0.21	28.93
11	131	400	7.13	147.7	28.72	51.14	100.3	0.01	28.91
11	131	500	7.39	177.1	13.77	50.93	100.3	0.06	28.9
11	131	600	7.84	178.4	7.88	50.64	100.3	0.01	28.9
11	131	700	12.08	182.3	9.32	50.89	100.3	0	28.91
11	131	800	12.23	177.6	7.91	52.86	100.3	0	28.92
11	131	900	12.14	177.3	9.39	55.18	100.3	0.03	28.92
11	131	1000	12.35	181.1	9.39	56.07	100.3	0	28.92
11	131	1100	14.48	177.2	9.26	60.44	100.4	0	28.93
11	131	1200	12.63	182.7	8.02	59.03	100.4	0	28.92
11	131	1300	11.99	183.4	7.85	57.85	100.4	0	28.92

Day	DATE JD	TIME 24H	WS MPH	WD Deg	SIGMA Deg	AT DegF	RH %	RN inch	BP inHg
11	131	1400	11.66	184.1	8.71	60.03	100.4	0	28.93
11	131	1500	9.83	178.5	9.05	61.42	100.4	0	28.94
11	131	1600	7.1	180.3	8.97	61.71	100.4	0	28.94
11	131	1700	3.36	4.864	27.63	64.43	97.8	0	28.95
11	131	1800	7.07	327.3	22.47	62.3	99.9	0	28.96
11	131	1900	8.64	325.9	12.1	59.91	100.4	0	28.97
11	131	2000	8.65	316.9	13.34	57.94	100.4	0	29
11	131	2100	6.951	293.5	14.42	56.74	100.3	0	29.01
11	131	2200	4.292	320.4	14.6	56.03	100.3	0	29.01
11	131	2300	5.819	265.1	16.3	55.98	100.3	0	29.01
12	132	0	4.196	257	14.41	55.41	100.3	0	29.02
12	132	100	4.673	255.2	9.6	54.54	100.3	0	29.02
12	132	200	4.509	248.8	13.99	54.17	100.3	0	29.02
12	132	300	2.784	200.7	12.29	53.22	100.3	0	29.01
12	132	400	2.437	149.5	18.54	52.89	100.3	0	29.01
12	132	500	2.577	189.6	19.62	52.92	100.3	0	29.01
12	132	600	2.865	215	16.64	52.42	100.3	0	29.02
12	132	700	4.411	239	11.88	53.89	100.3	0	29.04
12	132	800	5.092	246.7	15.32	56.74	98.3	0	29.07
12	132	900	6.256	284.2	25.64	58.94	93.9	0	29.08
12	132	1000	7.17	315.4	19.02	60.29	90.4	0	29.09
12	132	1100	7.88	299.1	24.78	63.46	81.3	0	29.11
12	132	1200	10.1	329.7	18.05	63.88	80.6	0	29.11
12	132	1300	11.46	333.1	15.38	63.62	83.5	0	29.11
12	132	1400	11.45	332.7	17.6	63.27	83.1	0	29.11
12	132	1500	11.02	336.4	15.34	62.91	83.7	0	29.11
12	132	1600	10.36	339.3	14.04	62.19	84.6	0	29.1
12	132	1700	11.82	329.3	14.73	63.14	84.4	0	29.12
12	132	1800	10.88	319.1	12.83	60.34	93.4	0	29.13
12	132	1900	6.077	297.8	15.07	58.53	97.2	0	29.13
12	132	2000	2.804	259.8	10.05	54.14	100.3	0	29.13
12	132	2100	2.501	272	9.86	51.53	100.3	0	29.14
12	132	2200	3.373	337	12.2	51.65	100.3	0	29.15
12	132	2300	3.623	26.09	12.56	52.81	100.3	0	29.16
13	133	0	3.439	25.76	6.677	51.26	100.3	0	29.16
13	133	100	1.218	359.9	16.09	49.56	100.3	0	29.16
13	133	200	0.789	250.3	14.01	50.69	100.3	0	29.18
13	133	300	2.471	94	10.04	51.38	100.3	0	29.19
13	133	400	2.06	102.7	11.17	50.68	100.3	0	29.2
13	133	500	2.791	130.2	17.61	49.43	100.3	0	29.2
13	133	600	2.677	206.8	16.25	49.88	100.3	0	29.22
13	133	700	2.721	182.2	12.34	52.54	100.3	0	29.25
13	133	800	3.951	222.6	21.13	57.24	100.4	0	29.31
13	133	900	3.413	229.7	50.02	61.97	91	0	29.34
13	133	1000	4.7	280.8	38.06	61.63	91.2	0	29.33
13	133	1100	4.683	254	16.59	62.19	90.9	0	29.31
13	133	1200	2.961	257.4	43.71	67.18	79.4	0	29.32
13	133	1300	5.165	32.54	59.05	69.23	74.2	0	29.31
13	133	1400	5.532	251	53.15	69.46	73	0	29.32
13	133	1500	6.395	68.88	31.33	70.4	69.81	0	29.3
13	133	1600	4.189	153.5	61.2	71.8	67.76	0	29.31
13	133	1700	5.425	228.4	22.7	71.2	68.84	0	29.31
13	133	1800	5.19	204.8	17.78	70.5	68.07	0	29.31
13	133	1900	4.058	121.6	23.08	66.66	78.2	0	29.29
13	133	2000	4.816	92.7	17.34	62.5	89.1	0	29.27
13	133	2100	4.588	104.3	13.03	58.85	99.2	0	29.27
13	133	2200	5.529	121.5	14.78	59.4	94.5	0	29.26
13	133	2300	8.72	139.3	12.7	61.75	85.1	0	29.28

Day	DATE JD	TIME 24H	WS MPH	WD Deg	SIGMA Deg	AT DegF	RH %	RN inch	BP inHg
14	134	0	10.27	151.6	13.77	61.27	86	0	29.3
14	134	100	11.58	152.9	14.27	60.35	84.9	0	29.29
14	134	200	12.6	148.4	12.42	59.01	89	0	29.28
14	134	300	14.23	139.4	11.02	58.26	92.2	0	29.28
14	134	400	12.9	143.8	10.73	57.31	94.5	0	29.26
14	134	500	16.3	138.7	10.39	56.66	94.3	0	29.21
14	134	600	14.09	143.2	12.59	56.33	93.6	0	29.2
14	134	700	16.17	152.9	12.47	57.68	90.8	0	29.21
14	134	800	18.21	166.4	12.64	59.2	88.4	0	29.21
14	134	900	22.18	170.7	11.82	58.19	90.9	0	29.2
14	134	1000	20.42	157.1	13.22	58.86	89.9	0	29.14
14	134	1100	19.61	171.3	13.33	58.64	91.9	0	29.12
14	134	1200	22.46	180.5	9.19	56.65	96.4	0	29.13
14	134	1300	24.66	177.5	7.91	57.19	94.8	0	29.12
14	134	1400	23.13	174.4	10.03	58.64	93.2	0	29.12
14	134	1500	22.44	174.6	9.74	58.75	94.8	0	29.1
14	134	1600	23.07	181.8	8.85	58.36	96.8	0	29.08
14	134	1700	22.97	176.6	9.2	57.32	99.9	0	29.07
14	134	1800	17.01	171.1	11.13	57.29	100.2	0	29.06
14	134	1900	17.77	178.2	8.53	54.57	100.3	0.03	29.07
14	134	2000	19.04	172.8	9.3	54.5	100.3	0.02	29.07
14	134	2100	16.15	187.7	9.28	51.84	100.3	0	29.06
14	134	2200	16.7	183.4	7.34	51.2	100.3	0	29.07
14	134	2300	16.45	187.5	7.78	52.29	100.3	0	29.06
15	135	0	14.06	184.6	7.78	51.81	100.3	0	29.07
15	135	100	12.12	185.9	7.85	52.42	100.3	0	29.07
15	135	200	10.83	184	7.38	53.44	100.3	0	29.07
15	135	300	5.53	222	26.72	53.05	100.3	0	29.08
15	135	400	5.925	225.4	14.57	53.29	100.3	0	29.08
15	135	500	7.64	275.9	14.11	53.75	100.3	0	29.09
15	135	600	4.265	264.3	11.25	53.12	100.3	0	29.11
15	135	700	7.83	287.2	16.3	54.28	100.3	0	29.13
15	135	800	7.44	293.8	16.16	55.61	100.3	0	29.15
15	135	900	13.02	292.2	17.35	58.53	90.1	0	29.18
15	135	1000	12.96	298.9	17.21	59.57	84.3	0	29.19
15	135	1100	14.19	302.3	16.76	60.72	78.6	0	29.21
15	135	1200	13.94	302.8	17.02	62.85	73	0	29.22
15	135	1300	13.87	301.4	17.11	62.94	71.1	0	29.22
15	135	1400	14.75	300.3	18	64.65	64.46	0	29.23
15	135	1500	13.29	306.8	18.32	66.05	58.72	0	29.23
15	135	1600	13.13	309.5	17.8	66.91	52.45	0	29.23
15	135	1700	13.47	315	14.97	67.1	45.54	0	29.23
15	135	1800	13.75	322.7	12.92	66.01	41.73	0	29.24
15	135	1900	10.56	321.1	11.2	63.38 (4)	44.4	0	29.23
15	135	2000	5.083	333	9.67	58.06 (4)	51.23	0	29.21
15	135	2100	2.388	319.2	7.75	53.58	63.2	0	29.21
15	135	2200	2.123	227.4	15.43	50.86	76.6	0	29.2
15	135	2300	2.89	198.1	16.92	48.64	85.3	0	29.2
16	136	0	4.705	170.8	10.7	48	86.9	0	29.19
16	136	100	6.011	182.6	7.11	46.39	93.3	0	29.18
16	136	200	6.551	182.3	8.04	45.99	98.9	0	29.18
16	136	300	5.436	180.9	5.896	46.13	99.2	0	29.18
16	136	400	6.41	179	5.043	44.89	100.3	0	29.18
16	136	500	7.51	183.9	5.292	44.43	100.3	0	29.18
16	136	600	7.24	183.8	7.09	45.37 (4)	100.3	0	29.2
16	136	700	7.43	187.3	8.8	51.03 (4)	91.3	0	29.24
16	136	800	5.568	203.9	20.14	57.84 (4)	73.2	0	29.27
16	136	900	8.21	323.6	23.52	63.65 (4)	58.89	0	29.29

Day	DATE JD	TIME 24H	WS MPH	WD Deg	SIGMA Deg	AT DegF	RH %	RN inch	BP inHg
16	136	1000	8.03	324.5	17.86	64.88	56.65	0	29.28
16	136	1100	7.94	327.3	28.38	68.01	52.06	0	29.28
16	136	1200	7.83	325.9	32.25	70.1	50.03	0	29.27
16	136	1300	9.81	338	22.91	71.7	48.32	0	29.26
16	136	1400	10.26	343.8	19.14	73	46.02	0	29.24
16	136	1500	10.19	346.2	20.28	73.6	46.19	0	29.22
16	136	1600	9.47	27.08	21.76	73.3	47.92	0	29.2
16	136	1700	10.78	49.08	13.93	71.1	49.18	0	29.18
16	136	1800	8.92	39.92	11.17	68	52.96	0	29.16
16	136	1900	7.27	40.12	8.58	64.98	56.42	0	29.14
16	136	2000	7.62	47.33	7.88	62.35	57.7	0	29.14
16	136	2100	8.05	60.82	8.4	62.16	56.17	0	29.13
16	136	2200	5.879	99.1	8.64	60.66	61.35	0	29.11
16	136	2300	2.694	174	21.79	56.06	73.4	0	29.07
17	137	0	4.06	135.1	23.27	58.7	68.05	0	29.09
17	137	100	6.673	100.3	6.918	57.71	72.2	0	29.07
17	137	200	6.073	145.6	9.07	57.85	70.5	0	29.03
17	137	300	6.293	170	8.67	55.17	80.8	0	28.99
17	137	400	8.44	174.3	7.61	54.62	84.1	0	28.98
17	137	500	9.34	174.6	8.22	55.36	84.7	0	28.96
17	137	600	11.5	187.7	8.32	56.26	86.6	0	28.96
17	137	700	12.92	187.7	8.78	57.99	86.2	0	28.94
17	137	800	9.55	203.2	13.48	59.89	86.3	0	28.92
17	137	900	14.3	181.1	9.46	61.38	86.5	0	28.91
17	137	1000	13.68	182.2	8.58	63.67	84.3	0	28.9
17	137	1100	14.58	182.5	9.59	64.02	88.7	0	28.9
17	137	1200	18.59	183.2	8.77	63.01	98.1	0	28.88
17	137	1300	16.44	181.5	9.12	65.05	95.6	0	28.88
17	137	1400	15.51	183.6	8.44	62.47	99.5	0	28.87
17	137	1500	14.32	178.5	8.1	62.54	100.3	0	28.88
17	137	1600	12.04	182.8	8.28	63.18	100.3	0	28.87
17	137	1700	11.09	185.8	8.77	63.49	100.3	0	28.88
17	137	1800	6.336	181.7	10.53	63.51	100.3	0	28.88
17	137	1900	3.888	204.8	13.93	65.62	100.3	0	28.9
17	137	2000	3.168	236.1	13.2	64.06	100.3	0	28.92
17	137	2100	10.93	327.6	11.38	62.53	100.3	0	28.94
17	137	2200	11.53	333	10.57	58.16	100.4	0	28.96
17	137	2300	13.01	339.9	9.89	55.17	89.5	0	28.99
18	138	0	8.63	355.7	13	51.92	85.8	0	29.01
18	138	100	6.211	27.6	21.33	50.53	86.8	0	29.01
18	138	200	5.489	14.99	21.17	48.88	89.2	0	29.01
18	138	300	4.478	14.64	11.12	47.12	97.2	0	29.01
18	138	400	3.44	355.1	21.14	47.01	98.2	0	29
18	138	500	4.941	314.6	17.92	47.78	93.8	0	29.01
18	138	600	5.746	315	12.78	48.18	93.2	0	29.03
18	138	700	5.976	292.9	15.7	49.37	89.5	0	29.05
18	138	800	5.833	285.2	21.94	50.89	81.4	0	29.06
18	138	900	5.995	313.2	21.26	51.34	77.4	0	29.06
18	138	1000	5.825	322.2	17.83	51.44	77.4	0	29.06
18	138	1100	4.625	302.6	26.32	52.63	76.4	0	29.06
18	138	1200	4.393	342.9	22.93	53.98	74.7	0	29.05
18	138	1300	5.011	330.3	50.67	57.61	68.28	0	29.03
18	138	1400	4.602	267	39.58	58.85	66.8	0	29.04
18	138	1500	3.565	345.6	39.06	58.71	67.09	0	29.04
18	138	1600	4.462	335	30.78	58.68	68.77	0	29.02
18	138	1700	5.114	348.7	18.88	58.16	71	0	29
18	138	1800	4.778	325.6	18.24	56.06	83.1	0	29
18	138	1900	3.461	318.8	13.52	54.64	87.6	0	29

Day	DATE JD	TIME 24H	WS MPH	WD Deg	SIGMA Deg	AT DegF	RH %	RN inch	BP inHg
18	138	2000	2.084	0.185	10.15	53.65	89.2	0	28.99
18	138	2100	2.941	178.5	12.59	52.65	97.5	0	28.99
18	138	2200	3.763	173.8	17.57	51.31	100.2	0	28.98
18	138	2300	2.946	175.4	9.8	49.19	100.3	0	28.95
19	139	0	4.74	170.1	10.53	47.51	100.3	0	28.94
19	139	100	4.66	180.3	9.4	47.37	100.3	0	28.95
19	139	200	4.037	187.8	15.02	48.04	100.3	0	28.95
19	139	300	2.176	136.4	17.79	48.5	100.3	0	28.94
19	139	400	2.242	184.3	19.18	48.05	100.3	0	28.94
19	139	500	0.722	212.7	5.983	47.9	100.3	0	28.94
19	139	600	2.419	144.9	22.84	48.18	100.3	0	28.93
19	139	700	2.579	189.1	26.38	48.59	100.3	0	28.93
19	139	800	4.619	206.9	16	50.2	100.3	0	28.96
19	139	900	4.168	236.5	17.75	54.6	92.7	0	28.96
19	139	1000	6.94	317.2	23.3	55.34	82.3	0	28.97
19	139	1100	6.511	305.6	25.83	58.39	71.4	0	28.99
19	139	1200	8.09	302.5	29.35	61.42	66.58	0	29.01
19	139	1300	9.04	328	22.1	64.33	63.37	0	29
19	139	1400	12.99	322.3	16.88	66.08	58.78	0	29
19	139	1500	13.92	332.5	16.84	66.78	50.08	0	28.99
19	139	1600	11.82	339.5	18.54	67.28	47.63	0	28.98
19	139	1700	10.13	339.4	16	67.43	50.88	0	28.99
19	139	1800	8.91	344.5	12.12	64.19	57.71	0	29
19	139	1900	5.365	348.3	12.32	62.97	61.12	0	28.99
19	139	2000	6.205	317.2	13.37	59.83 (4)	65.42	0	29
19	139	2100	7.35	337.4	15.49	52.87 (4)	93.5	0.06	29.01
19	139	2200	3.66	305.9	22.06	49.85	100.3	0	29
19	139	2300	3.336	137.7	18.71	50.15	100.3	0	29
20	140	0	2.702	101.4	17.42	50.26	100.3	0	29
20	140	100	1.972	339.7	25.02	46.77	100.3	0	28.99
20	140	200	1.591	163.7	13.32	45.54	100.3	0	28.98
20	140	300	1.719	225.6	13.61	43.71	100.3	0	28.99
20	140	400	1.826	198.1	13.35	43.41	100.3	0	29
20	140	500	2.199	158.4	8.29	43.71	100.3	0	29.03
20	140	600	3.149	176.9	9.79	42.87 (4)	100.3	0	29.05
20	140	700	4.54	187.2	12.21	48.15 (4)	100.3	0	29.1
20	140	800	3.818	252.3	27.64	54.48 (4)	92.7	0	29.15
20	140	900	7.09	287.6	20.95	58.07	79.4	0	29.17
20	140	1000	9.61	307.7	19.8	60.95	69.82	0	29.17
20	140	1100	11.64	321	20.68	62.29	64.13	0	29.18
20	140	1200	9.11	327.7	24.46	64.1	60.77	0	29.18
20	140	1300	7.72	324.4	28.59	66.28	56.71	0	29.18
20	140	1400	5.8	301.2	42.62	68.32	50.78	0	29.17
20	140	1500	6.939	339.2	30.4	69.45	48.81	0	29.16
20	140	1600	6.634	338.3	28.97	70.4	45.98	0	29.14
20	140	1700	4.353	351.1	35.12	72.1	42.6	0	29.14
20	140	1800	3.475	13.72	31.71	72.8	41.93	0	29.14
20	140	1900	6.518	94.2	17.79	68.41 (4)	51.22	0	29.13
20	140	2000	5.526	120.1	8.77	61.32 (4)	64.09	0	29.1
20	140	2100	5.096	162.3	17.12	58.3	69	0	29.1
20	140	2200	4.997	173.6	32.05	55.61	78.5	0	29.09
20	140	2300	8.45	177.3	8.53	55.96	80.1	0	29.09
21	141	0	10.9	181.8	9.17	56.21	81	0	29.09
21	141	100	11.59	181.8	9.43	56.48	78.7	0	29.08
21	141	200	9.75	187.6	36.99	55.83	82.3	0	29.08
21	141	300	5.963	1.4	47.71	57.86	75.5	0	29.1
21	141	400	5.037	128.8	43.58	55.09	95	0.01	29.1
21	141	500	5.908	182.9	14.52	52.51	100.3	0	29.09

Day	DATE JD	TIME 24H	WS MPH	WD Deg	SIGMA Deg	AT DegF	RH %	RN inch	BP inHg
21	141	600	7.99	187.8	8.93	53.45	100.3	0	29.1
21	141	700	7.15	188.5	8.78	55.88	96.7	0	29.12
21	141	800	10.65	182.9	8.37	58.91	87.4	0	29.14
21	141	900	12.26	186.3	9.21	63.52	79.2	0	29.17
21	141	1000	10.55	209.7	13.72	68.11	69.73	0	29.19
21	141	1100	12.37	261.9	13.87	71.4	49.87	0	29.19
21	141	1200	10.81	257.8	18.13	73.4	41.42	0	29.18
21	141	1300	10.94	246.1	19.06	74.6	36.12	0	29.16
21	141	1400	11.55	238.9	16.61	75.6	34.9	0	29.15
21	141	1500	11.2	260.1	16.24	75.4	34.7	0	29.14
21	141	1600	12.77	289.4	16.22	74	38.68	0	29.14
21	141	1700	14.66	300.1	16.77	71.9	39.47	0	29.16
21	141	1800	14.55	289.5	17.13	69.63	32.92	0	29.18
21	141	1900	13.52	285.9	17.84	66.95 (4)	35.94	0	29.19
21	141	2000	11.37	302.6	17.63	61.56 (4)	53.03	0	29.2
21	141	2100	7.09	319.3	17.14	56.58	67.72	0	29.23
21	141	2200	2.498	330.7	13.16	52.62	78.2	0	29.24
21	141	2300	1.324	198.5	28.04	51.06	85.2	0	29.25
22	142	0	4.252	240.4	21.1	50.99	86.6	0	29.27
22	142	100	5.645	283.4	13.39	51.58	83.4	0	29.29
22	142	200	5.677	289.7	12.12	51.36	83	0	29.3
22	142	300	5.213	283.3	13.36	49.66	87.4	0	29.3
22	142	400	2.739	237	18.55	45.36	98.3	0	29.29
22	142	500	4.341	200.5	9.57	41.89	100.3	0	29.29
22	142	600	5.123	195	10.17	44.59 (4)	100.3	0	29.34
22	142	700	6.042	197.3	13.36	50.19 (4)	97	0	29.41
22	142	800	9.61	272.1	16.53	54.8	82.6	0	29.43
22	142	900	11.14	298.2	17.54	57.03	78.8	0	29.44
22	142	1000	12.15	300.5	17.73	58.59	76.4	0	29.46
22	142	1100	11.06	301.1	19.12	59.79	71.6	0	29.48
22	142	1200	11.07	299.5	19.23	61.92	65.94	0	29.49
22	142	1300	10.3	311.3	20.93	63.32	63.5	0	29.5
22	142	1400	11.48	320.1	17.56	65	59.35	0	29.51
22	142	1500	10.91	327.9	17.09	65.43	58.71	0	29.51
22	142	1600	10.43	339.2	16.73	65.81	61.48	0	29.51
22	142	1700	11.67	341.1	14.65	65.56	53.02	0	29.52
22	142	1800	9.12	344.4	13.02	65.39	50.55	0	29.52
22	142	1900	5.55	333.2	12.66	64.41 (4)	53.3	0	29.53
22	142	2000	2.806	325.4	11.14	57.91 (4)	64.32	0	29.51
22	142	2100	1.284	85.2	11.49	50.25 (4)	90.4	0	29.49
22	142	2200	2.231	158.6	13.29	46.82	99.2	0	29.48
22	142	2300	4.974	178	5.447	46.76	98	0	29.47
23	143	0	5.756	184	9.27	46.96	99.6	0	29.47
23	143	100	6.401	173.8	7.71	46.31	100.3	0	29.48
23	143	200	5.593	184.6	6.729	44.26	100.3	0	29.47
23	143	300	7.87	187.1	6.58	43.88	100.3	0	29.47
23	143	400	9.13	183.2	6.892	44.6	100.3	0	29.48
23	143	500	10.13	177.4	7.88	44.93	100.3	0	29.48
23	143	600	9.43	178.5	8.13	46.26	100.3	0	29.51
23	143	700	10.31	179.1	8.48	50.2 (4)	96.6	0	29.56
23	143	800	12.11	173.4	9.79	55.3 (4)	80.4	0	29.57
23	143	900	13.67	184	9.82	60.9 (4)	68.82	0	29.56
23	143	1000	13.88	182.7	10.73	66.36 (4)	59.33	0	29.55
23	143	1100	14.77	180.7	11	70	54.12	0	29.54
23	143	1200	14.96	183.1	11.49	72.6	47.15	0	29.51
23	143	1300	13.03	184	13.62	74.7	43.6	0	29.48
23	143	1400	11.86	182.8	12.39	76.1	42.47	0	29.45
23	143	1500	10.27	201.6	14.83	77.8	39.85	0	29.43

Day	DATE JD	TIME 24H	WS MPH	WD Deg	SIGMA Deg	AT DegF	RH %	RN inch	BP inHg
23	143	1600	10.37	202.7	13.51	78.8	39.34	0	29.42
23	143	1700	8.61	198.3	13.92	79	40.9	0	29.41
23	143	1800	7.56	174.9	10.52	76.7	44	0	29.38
23	143	1900	5.459	186.7	15.67	74.3 (4)	51.69	0	29.36
23	143	2000	7.11	173.8	10.07	69.17 (4)	61.15	0	29.34
23	143	2100	7.91	169.7	10.01	69.69	63.02	0	29.33
23	143	2200	8.33	177.4	8.86	67.93	69.15	0	29.33
23	143	2300	9.92	182.4	9.06	66.05	75.8	0	29.3
24	144	0	11.08	188.3	10.16	64.34	84.5	0	29.29
24	144	100	10.74	179.8	9.17	64.46	89.4	0	29.27
24	144	200	13.61	179.5	8.18	65.27	90.9	0	29.27
24	144	300	13.12	184	8.29	64.38	94.3	0	29.25
24	144	400	11.54	183.5	8.51	65.2	93.4	0	29.25
24	144	500	12.55	185.6	8.28	64.53	94.3	0	29.25
24	144	600	9.86	182.6	7.42	65.29	94.2	0	29.27
24	144	700	10.83	199.8	13.81	67.57	90.3	0	29.29
24	144	800	11.44	219.3	12.04	69.75	91.3	0.03	29.3
24	144	900	8.82	194.6	11.21	66 (4)	100.4	0	29.28
24	144	1000	7.32	228.5	16.5	72.1 (4)	92	0.06	29.29
24	144	1100	6.824	331.9	12.64	68.75	98.3	0.07	29.3
24	144	1200	4.627	353.1	18.01	65.06	100.4	0.03	29.29
24	144	1300	6.899	0.306	11.67	64.23	100.4	0	29.3
24	144	1400	9.96	356.9	11.52	60.15	100.3	0.01	29.3
24	144	1500	10.51	345.3	11.23	56.97	100.4	0.02	29.32
24	144	1600	8.47	344.1	11.64	55.16	100.3	0	29.32
24	144	1700	7.41	335.7	12.66	54.06	100.3	0.01	29.32
24	144	1800	5.353	4.227	12.43	53.68	100.3	0.04	29.32
24	144	1900	1.701	10.7	13.02	53.63	100.3	0.03	29.34
24	144	2000	2.042	354.9	14.19	53.51	100.3	0.01	29.34
24	144	2100	4.361	320	12.63	53.17	100.3	0	29.36
24	144	2200	4.015	322.4	13.46	52.63	100.3	0	29.38
24	144	2300	2.676	343.4	20.35	52.13	100.3	0	29.38
25	145	0	2.367	288.1	14.14	51.91	100.3	0	29.39
25	145	100	2.493	280.8	10.7	51.55	100.3	0	29.39
25	145	200	0.623	286.2	8.65	51.46	100.3	0	29.39
25	145	300	2.146	119.8	11.46	50.89	100.3	0	29.38
25	145	400	0.532	10.92	6.512	50.14	100.3	0	29.39
25	145	500	0.228	140.3	4.137	50.34	100.3	0	29.41
25	145	600	2.146	156.2	11.85	51.37	100.3	0	29.42
25	145	700	2.493	227	11.78	52.64	100.3	0	29.45
25	145	800	3.419	221.4	19.19	54.64	100.3	0	29.47
25	145	900	3.845	331.9	36.36	57.54	100.4	0	29.49
25	145	1000	3.521	318.1	38.09	59.05	100.4	0	29.5
25	145	1100	4.85	275.8	35.56	61.67	99.1	0	29.51
25	145	1200	5.951	344.3	30.94	63.85	95.1	0	29.5
25	145	1300	6.518	32.89	27.33	66.22	84.4	0	29.49
25	145	1400	5.114	44.85	38.2	67.52	73.3	0	29.49
25	145	1500	3.552	12.6	26.1	66.77	78.3	0	29.47
25	145	1600	5.425	332.7	21.44	66.34	79.6	0	29.47
25	145	1700	6.799	16.73	12.15	65.28	83.3	0	29.44
25	145	1800	8.39	5.607	10.08	62.15	90.8	0	29.43
25	145	1900	6.3	359.4	9.03	59.95	89.7	0	29.43
25	145	2000	5.171	3.933	18.76	57.84	95.3	0	29.42
25	145	2100	4.146	357.6	19.86	55.15	100.3	0	29.43
25	145	2200	2.496	256.3	13.98	54.9	100.3	0	29.44
25	145	2300	1.905	256.8	16.62	55.04	100.3	0	29.45
26	146	0	1.221	168.4	12.66	54.66	100.4	0	29.45
26	146	100	1.183	349.4	12.44	54.53	100.3	0	29.43

Day	DATE JD	TIME 24H	WS MPH	WD Deg	SIGMA Deg	AT DegF	RH %	RN inch	BP inHg
26	146	200	1.061	352.3	7.06	53.74	100.3	0	29.42
26	146	300	0.956	308	7.92	53.41	100.3	0	29.42
26	146	400	4.179	343	10.56	53.41	100.3	0	29.43
26	146	500	2.239	266.5	15.62	53.53	100.3	0	29.43
26	146	600	0.617	281.8	7.28	54	100.3	0	29.44
26	146	700	1.726	292.1	12.69	55.27	100.3	0	29.46
26	146	800	4.359	317.1	17.01	56.45	100.3	0	29.47
26	146	900	6.403	317.7	14.76	58.51	97	0	29.5
26	146	1000	5.739	308	18.85	61.14	88.8	0	29.52
26	146	1100	7.35	337.2	19.97	65.28	77.5	0	29.53
26	146	1200	10.34	358.4	19.93	69.2	61.21	0	29.53
26	146	1300	11.01	1.889	20.36	70.9	52.6	0	29.52
26	146	1400	11.61	358.2	17.02	71.5	48.17	0	29.52
26	146	1500	11.05	344.9	16.48	71.6	44.75	0	29.52
26	146	1600	10.68	351	17.58	71.8	42.99	0	29.51
26	146	1700	10.35	351.6	14.55	71.4	43.14	0	29.51
26	146	1800	8.4	355.8	15.51	70.8	46.52	0	29.51
26	146	1900	6.305	351.3	11.53	68.77 (4)	51.6	0	29.52
26	146	2000	4.699	4.185	6.641	61.75 (4)	65.29	0	29.5
26	146	2100	3.264	11.07	7.7	55.33 (4)	85	0	29.48
26	146	2200	1.394	30.26	10.71	51.27	99.9	0	29.48
26	146	2300	2.372	186.9	16.39	50.15	100	0	29.48
27	147	0	3.883	226.9	19.21	51.65	90.7	0	29.46
27	147	100	3.639	173.6	23.77	49.85	96.1	0	29.47
27	147	200	2.701	180	18.7	47.12	100.3	0	29.48
27	147	300	3.452	310.9	14.89	46.05	100.3	0	29.48
27	147	400	3.732	359.5	7.78	45.61	100.3	0	29.49
27	147	500	3.101	4.786	6.566	44.22	100.3	0	29.51
27	147	600	2.767	359.8	11.84	46.34 (4)	100.3	0	29.55
27	147	700	5.422	335.8	12.91	52.46 (4)	100.3	0	29.62
27	147	800	5.602	359.6	18.03	57 (4)	94.4	0	29.65
27	147	900	5.831	11.27	21.11	62.02 (4)	81	0	29.67
27	147	1000	6.851	16.14	25.74	66.11	66.72	0	29.68
27	147	1100	8.95	25.32	24.81	68.75	49.92	0	29.67
27	147	1200	6.806	11.77	34.92	70	51.44	0	29.66
27	147	1300	8.33	345.1	29.66	70.7	45.61	0	29.65
27	147	1400	9.08	9.81	30.33	71.1	43.53	0	29.64
27	147	1500	9.2	18.37	26.58	71.2	42.37	0	29.62
27	147	1600	7.76	5.171	21.51	71.2	43.18	0	29.61
27	147	1700	6.265	27.91	31.78	71.7	40.98	0	29.6
27	147	1800	5.823	21.14	17.74	71	47.34	0	29.59
27	147	1900	5.781	17.74	9.91	67.92 (4)	60.32	0	29.59
27	147	2000	4.888	11.96	6.521	60.91 (4)	76.3	0	29.57
27	147	2100	6.551	27.9	4.338	57.03	85.6	0	29.55
27	147	2200	4.953	3.718	24.58	54.56	93.3	0	29.55
27	147	2300	0.833	141.1	26.59	51.33	100.3	0	29.53
28	148	0	2.558	145	12.31	49.53	100.3	0	29.52
28	148	100	4.269	145.7	10.33	49.22	100.3	0	29.5
28	148	200	5.962	146.1	13.9	54	94.9	0	29.5
28	148	300	5.706	157.9	14.33	54.8	92.6	0	29.5
28	148	400	6.854	145.3	10.99	55.43	92.8	0	29.5
28	148	500	4.714	141.7	13.93	55.13	98.9	0	29.51
28	148	600	8.19	141.6	12.55	58.05	96.5	0	29.51
28	148	700	9.94	130.7	11.1	59.88	95.1	0	29.51
28	148	800	11.7	140.5	12.82	62.9	85.2	0	29.51
28	148	900	17.23	168.5	12.91	65	72.9	0	29.51
28	148	1000	21.57	173.4	10.89	65.39	66.91	0	29.51
28	148	1100	22.04	176.9	9.54	63.44 (4)	67.2	0	29.51

Day	DATE JD	TIME 24H	WS MPH	WD Deg	SIGMA Deg	AT DegF	RH %	RN inch	BP inHg
28	148	1200	17.62	167.4	12.46	58.13 (4)	89.4	0.04	29.49
28	148	1300	17.2	166.4	12.26	58.47	92.5	0	29.46
28	148	1400	17.65	173.7	11.83	58.19	96	0.18	29.46
28	148	1500	14.8	167.1	12.28	54.41	100.3	0.26	29.44
28	148	1600	16.13	166.2	11.82	54.37	100.3	0.06	29.41
28	148	1700	14.36	165.9	11.36	53.6	100.3	0.12	29.39
28	148	1800	15.6	171.4	10.46	53.54	100.3	0.18	29.36
28	148	1900	15.14	171.8	10.47	54.14	100.3	0.04	29.34
28	148	2000	16.78	176.6	8.73	54.57	100.3	0	29.32
28	148	2100	17.69	176.1	9.39	55.56	100.3	0	29.31
28	148	2200	18.36	174.2	9.2	55.67	100.4	0	29.3
28	148	2300	18.06	173	10.18	56.55	100.4	0	29.28
29	149	0	17.51	170.3	9.92	57.47	100.3	0	29.26
29	149	100	17.8	176.2	9.34	58.07	100.3	0	29.24
29	149	200	16.95	180.4	9.18	58.08	100.3	0	29.21
29	149	300	15.46	180	9.59	56.94	100.3	0	29.19
29	149	400	18.16	182.6	8.62	57.15	100.3	0	29.17
29	149	500	17.04	185.9	9.96	58.53	100.3	0	29.17
29	149	600	14.36	176.2	10.33	57.69	100.3	0	29.16
29	149	700	14.75	180.6	9.91	58.93	100.3	0	29.15
29	149	800	16.6	178.9	9.42	60.41	100.3	0	29.16
29	149	900	19.38	182.1	9.09	63.99	100.4	0	29.18
29	149	1000	17.75	187.8	10.25	68.92	98.4	0	29.18
29	149	1100	16.76	185.5	11.01	71.6	93.9	0	29.17
29	149	1200	13.02	194.9	12.26	72.8	89.4	0	29.15
29	149	1300	13.68	293.2	23.21	74.1	81.4	0	29.15
29	149	1400	13.09	303	17.38	74.3	79.3	0	29.15
29	149	1500	14.14	303	15.85	74.1	74.7	0	29.14
29	149	1600	13.82	304.1	17.23	72.1	76.1	0	29.14
29	149	1700	12.83	289.7	17.3	71.3	74.6	0	29.15
29	149	1800	13.21	283.1	17.22	69.6	76	0	29.17
29	149	1900	12.51	276.7	15.29	66.24	82.4	0	29.18
29	149	2000	12.62	274.8	15.77	62.69	89.1	0	29.19
29	149	2100	11	260.6	14.13	61.34	91.1	0	29.2
29	149	2200	8.25	254.4	14.39	60.46	93.4	0	29.21
29	149	2300	9.62	276.4	15.27	60.71	93.7	0	29.21
30	150	0	7.8	278.4	19.24	59.06	100.2	0	29.21
30	150	100	6.46	265.3	14.23	58.21	100.4	0	29.2
30	150	200	9.04	272.8	14.34	58.05	100.3	0	29.2
30	150	300	6.645	270.7	14.15	57.78	100.3	0	29.19
30	150	400	8.13	276.3	14.9	57.89	100.3	0	29.2
30	150	500	8.13	285	16.24	57.36	100.3	0	29.21
30	150	600	7.19	289.3	16.31	55.8	100.3	0	29.22
30	150	700	6.727	297.1	18.22	54.57	100.3	0	29.24
30	150	800	9.98	322.5	14.09	55.21	100.3	0	29.24
30	150	900	6.767	302.7	16.96	56.26	100.3	0	29.26
30	150	1000	8.51	312.5	17.33	59.62	100.3	0	29.29
30	150	1100	10.97	320	15.84	62.31	98.2	0	29.32
30	150	1200	12.19	330.2	19.74	65.91	84	0	29.33
30	150	1300	13.27	333.5	17.52	68.33	74.9	0	29.33
30	150	1400	12.2	326.5	17.58	70.4	67.34	0	29.33
30	150	1500	11.75	326.7	20.11	72	62.9	0	29.33
30	150	1600	11.25	320.2	18.25	72.4	61.32	0	29.33
30	150	1700	9.63	328.2	16.11	72.9	58.4	0	29.32
30	150	1800	8.26	321.6	15.53	73	58.78	0	29.31
30	150	1900	6.54	301.5	16.82	71	63.87	0	29.31
30	150	2000	5.296	281	12.19	66.53	74.4	0	29.31
30	150	2100	3.665	224.2	14.14	61.94	89.9	0	29.31

Day	DATE JD	TIME 24H	WS MPH	WD Deg	SIGMA Deg	AT DegF	RH %	RN inch	BP inHg
30	150	2200	4.799	196.5	10.99	58.88	98.7	0	29.31
30	150	2300	5.191	208.9	9.81	57.36	100.1	0	29.31
31	151	0	3.548	198.8	11.37	54.48	100.3	0	29.32
31	151	100	6.14	184.4	7.87	54.1	100.3	0	29.32
31	151	200	7.04	181	6.139	54.25	100.3	0	29.32
31	151	300	6.682	180.9	6.325	52.82	100.3	0	29.32
31	151	400	7.92	190.5	10.32	52.87	100.3	0	29.33
31	151	500	9.14	181.9	8.11	52.29	100.3	0	29.34
31	151	600	8.36	185.1	10.69	53.44	100.3	0	29.37
31	151	700	9.35	185	8.54	56.87 (4)	100.3	0	29.41
31	151	800	9.39	188	8.96	62.2 (4)	90.1	0	29.43
31	151	900	6.667	194.2	17.96	69.55 (4)	75.5	0	29.45
31	151	1000	7.24	230.2	19.86	74.7 (4)	65.41	0	29.46
31	151	1100	9.76	267.2	19.34	77.7	59.45	0	29.45
31	151	1200	9.99	297.2	19.27	79.6	53.88	0	29.45
31	151	1300	9.36	301.5	19.74	80.7	48.83	0	29.44
31	151	1400	9.57	297.7	18.43	81.2	47.05	0	29.43
31	151	1500	9.66	299.6	21.29	81.7	46.73	0	29.42
31	151	1600	8.55	298.9	21.29	81.9	47.91	0	29.41
31	151	1700	8.13	307.1	18.72	80.9	48.98	0	29.41
31	151	1800	6.752	308.8	14.66	79.2	51.49	0	29.4
31	151	1900	4.903	314.2	12.38	76.2 (4)	54.85	0	29.4
31	151	2000	3.106	319.3	11.03	70.3 (4)	66.82	0	29.39
31	151	2100	1.172	35.52	19.11	62.91 (4)	91	0	29.38
31	151	2200	2.71	157.1	8.61	59.75	99.1	0	29.38
31	151	2300	4.896	172	7.22	59.4	99	0	29.38
01-Jun	152	0	6.746	187.7	7	59.6	99.8	0	29.37
1	152	100	6.724	187.5	8.26	58.6	100.3	0	29.38
1	152	200	6.301	187.2	8.97	56.92	100.3	0	29.37
1	152	300	5.544	186.2	10.03	55.38	100.3	0	29.37
1	152	400	6.79	180.6	10.21	55.37	100.3	0	29.37
1	152	500	8.68	182.9	8.04	54.03	100.3	0	29.39
1	152	600	8.28	182.2	8.78	55.53	100.3	0	29.41
1	152	700	9.24	179.8	8.9	58.62 (4)	100.4	0	29.45
1	152	800	10.42	183.4	9.16	63.73 (4)	92.6	0	29.47
1	152	900	9.8	185	9.49	69.92 (4)	77.2	0	29.48
1	152	1000	9.35	184	11.35	73.7	72.3	0	29.48
1	152	1100	11.97	184.6	10.29	78.5	61.95	0	29.47
1	152	1200	11.5	184.7	12.67	79.6	55.98	0	29.46
1	152	1300	11.45	182.9	13.48	81	52.11	0	29.44
1	152	1400	11.27	183.4	14.11	83.4	48.33	0	29.43
1	152	1500	10.26	182	11.32	81.1	49.32	0	29.42
1	152	1600	8.96	176.1	10.9	80.3	49.28	0	29.4
1	152	1700	7.47	177.1	9.15	78.5	50.23	0	29.4
1	152	1800	7.25	176.9	9.73	76.1	58.66	0	29.38
1	152	1900	6.586	178.9	7.78	74.9	66.19	0	29.38
1	152	2000	6.328	179.2	7.84	71.8	74.6	0	29.37
1	152	2100	7.57 (1)	198.5	10.48	70.8	77.9	0	29.38
1	152	2200	7.54 (1)	202.9	9.35	69.23	83.7	0	29.39
1	152	2300	7.54 (1)	176.9	10.02	69.36	85.2	0	29.39
2	153	0	5.384	170.6	10.19	68.49	90.4	0	29.39
2	153	100	4.681	166.1	9.75	65.98	98.7	0	29.38
2	153	200	5.152	164.8	10.84	66.37	99.2	0	29.37
2	153	300	5.542	139.5	9.42	66.32	100.3	0	29.37
2	153	400	4.523	151.9	13.04	64.99	100.3	0	29.36
2	153	500	5.998	162.9	12.87	64.3	100.3	0	29.36
2	153	600	7.71	171.8	10.29	64.57	100.3	0	29.36
2	153	700	9.41	177.1	8.46	65.89	100.3	0	29.37

Day	DATE JD	TIME 24H	WS MPH	WD Deg	SIGMA Deg	AT DegF	RH %	RN inch	BP inHg
2	153	800	8.5	174.5	11.98	66.22	100.4	0	29.38
2	153	900	6.249	175.7	12.23	66.68	100.4	0	29.38
2	153	1000	9.69	179.4	10.09	71.1	99	0	29.39
2	153	1100	10.69	186.9	10.6	72.9	97	0	29.4
2	153	1200	8.84	176.9	12.33	75.7	91	0	29.39
2	153	1300	8.31	181.1	16.42	80.3	79.5	0	29.39
2	153	1400	6.312	151.6	17.41	80.9	80.1	0	29.36
2	153	1500	8.39	164.6	16.38	81.5	82.7	0	29.32
2	153	1600	9.29	180.8	14.79	80.6 (4)	80.1	0	29.31
2	153	1700	6.942	296	35.44	65.29 (4)	99.9	0.68	29.31
2	153	1800	4.572	150.2	21.84	66.3	100.3	0.03	29.31
2	153	1900	4.071	125.9	14.49	66.98	100.4	0	29.31
2	153	2000	7.49	171.8	11.63	66.02	100.4	0	29.3
2	153	2100	7.43	173.2	12.97	64.84	100.3	0	29.28
2	153	2200	9.57	178.3	11.14	64.94	100.3	0	29.27
2	153	2300	5.513	173.5	14.82	64.98	100.3	0	29.26
3	154	0	8.51	180.8	9.88	64.8	100.3	0	29.26
3	154	100	11.03	174.4	9.93	65.46	100.3	0	29.23
3	154	200	12.59	177.7	9.04	64.81	100.3	0	29.22
3	154	300	12.27	185.6	8.53	64.15	100.3	0	29.22
3	154	400	9.53	191.7	10.74	64.45	100.4	0	29.23
3	154	500	8.35	190.9	9.65	63.99	100.4	0	29.24
3	154	600	9.74	187.3	8.55	64.26	100.4	0	29.25
3	154	700	9.54	181	9.76	66.05	100.3	0	29.26
3	154	800	10.92	188.5	10.28	69.48	100.4	0	29.28
3	154	900	8.74	199.7	11.34	70.7	100.4	0	29.28
3	154	1000	7.35	211.3	13.2	72.3	98.7	0	29.28
3	154	1100	6.487	227.2	14.44	75.2	91	0	29.29
3	154	1200	8.82	262.9	18.77	78	81.6	0	29.28
3	154	1300	7.76	252.8	18.5	78.4	78.4	0	29.27
3	154	1400	7.59	287.1	24.9	79.8	74.9	0	29.26
3	154	1500	8.06	296	22.48	81.1	70.8	0	29.24
3	154	1600	9.68	319.4	14.62	78.8	74.9	0	29.23
3	154	1700	10.48	326.6	15.84	75.7	82.9	0	29.24
3	154	1800	11.97	340.9	11.12	71.3	100.2	0	29.24
3	154	1900	10.67	327.4	12.89	67.24	100.4	0	29.26
3	154	2000	9.56	330.3	13.05	63.66	100.4	0	29.26
3	154	2100	8.57	329.2	12.51	60.98	100.3	0	29.28
3	154	2200	6.218	332.4	16.88	61.48	100.4	0	29.29
3	154	2300	6.752	314.8	16.69	61.68	100.4	0	29.3
4	155	0	8.99	336.8	11.37	61.8	100.4	0	29.31
4	155	100	8.85	334.6	12.59	61.63	100.4	0	29.31
4	155	200	9.02	329.8	12.12	61.37	100.4	0	29.32
4	155	300	9.4	333.4	12.28	60.99	100.4	0	29.32
4	155	400	9.49	334.9	12.16	59.97	100.4	0	29.34
4	155	500	8.48	331.1	12.61	58.95	100.4	0	29.36
4	155	600	8.04	327.8	12.78	58.65	100.4	0	29.39
4	155	700	7.82	346.6	12.39	59.79	100.4	0	29.42
4	155	800	8.32	351.4	13.4	62.83	100.4	0	29.45
4	155	900	7.18	325.5	20.53	65.95	99.7	0	29.48
4	155	1000	8.3	339.7	18.37	68.68	90.8	0	29.49
4	155	1100	9.76	352	18.24	71.5	80	0	29.5
4	155	1200	10.88	344.6	17.1	72.6	75.9	0	29.5
4	155	1300	11.85	356.4	17.63	73.7	65.86	0	29.5
4	155	1400	11.85	352.9	15.35	73.9	56.31	0	29.49
4	155	1500	11.04	358.8	14.31	73.6	49.53	0	29.49
4	155	1600	9.95	352	14.01	73.2	46.14	0	29.49
4	155	1700	9.42	357.7	12.28	72.2	44.93	0	29.48

Day	DATE JD	TIME 24H	WS MPH	WD Deg	SIGMA Deg	AT DegF	RH %	RN inch	BP inHg
4	155	1800	6.714	359.1	9.99	70.7	50.68	0	29.48
4	155	1900	5.281	13.51	5.715	67.31 (4)	61.17	0	29.47
4	155	2000	2.8	59.38	10.91	60.66 (4)	82.3	0	29.45
4	155	2100	3.786	94	10.83	53.86 (4)	100	0	29.43
4	155	2200	1.692	153.9	11.02	51.93	99.5	0	29.43
4	155	2300	5.216	174.6	7.38	51.3	99.5	0	29.41
5	156	0	5.665	182.5	10.06	51.5	100.3	0	29.4
5	156	100	4.491	192.2	11.01	49.9	100.3	0	29.38
5	156	200	6.084	180.8	8.42	49.19	100.3	0	29.37
5	156	300	6.899	182.8	7.86	48.17	100.3	0	29.36
5	156	400	8.1	182.6	7.51	48.21	100.3	0	29.36
5	156	500	7.74	184	9.13	47.85	100.3	0	29.36
5	156	600	10.74	186.9	9.39	49.41	100.3	0	29.38
5	156	700	10.8	186.1	9.51	51.36	100.3	0	29.4
5	156	800	10.03	184.7	9.48	56.05	96.6	0	29.41
5	156	900	9.57	187.5	11.4	60.75 (4)	86.5	0	29.41
5	156	1000	9.01	186.4	11.02	66.77 (4)	74.5	0	29.41
5	156	1100	5.846	186.3	14.93	73.2 (4)	68.83	0	29.41
5	156	1200	4.499	215.2	44.61	78.3 (4)	60.67	0	29.38
5	156	1300	4.828	299.4	34.61	80.6	55.01	0	29.35
5	156	1400	5.552	302.6	37.6	81.7	52.65	0.02	29.33
5	156	1500	5.846	316.9	23.11	82	49.61	0	29.32
5	156	1600	4.495	332.4	31.04	83	49.58	0	29.29
5	156	1700	3.36	301.2	30.48	83.1	50.59	0.01	29.28
5	156	1800	3.918	319.3	33.5	81.1 (4)	58.56	0	29.27
5	156	1900	6.529	8.93	9.06	75.3 (4)	70.1	0	29.26
5	156	2000	5.441	36.15	8.02	69.01 (4)	81.4	0	29.24
5	156	2100	5.867	58.3	8.02	65.56	89.6	0	29.23
5	156	2200	4.218	75.5	34.11	63.25	94.2	0	29.22
5	156	2300	2.432	176.9	12.4	59	100.3	0	29.2
6	157	0	4.979	178.7	8.59	58.32	100.3	0	29.19
6	157	100	6.301	179.7	9.07	58.76	100.3	0	29.18
6	157	200	7.3	173.9	7.53	58.37	100.3	0	29.17
6	157	300	7.8	185	8.48	58.08	100.3	0	29.15
6	157	400	7.1	185.8	8.08	57.09	100.3	0	29.15
6	157	500	9.55	176	9.61	57.73	100.3	0	29.15
6	157	600	10.74	177.4	8.48	58.59	100.3	0	29.16
6	157	700	11.31	178.3	8.68	60.87	100.4	0	29.18
6	157	800	10.56	182	8.4	64.61 (4)	99.3	0	29.2
6	157	900	7.78	189	11.26	70.4 (4)	90	0	29.21
6	157	1000	7.46	191.9	12.76	74.5	84.2	0	29.21
6	157	1100	7.8	188.2	14.5	77.8	76.6	0	29.2
6	157	1200	11.59	191.5	12.58	79.8	63.95	0	29.18
6	157	1300	10.5	191.6	13.2	81.1	60.11	0	29.15
6	157	1400	9.41	189.9	13.19	81.9	60.53	0	29.13
6	157	1500	9.08	191.9	12.55	82.2	60.23	0	29.11
6	157	1600	6.596	178.8	21.29	83	59.14	0	29.09
6	157	1700	6.186	123.7	21.68	81.9	63.5	0	29.07
6	157	1800	6.427	134.7	16.32	82	63.84	0	29.05
6	157	1900	4.815	154.7	13.32	78.7	70.7	0	29.05
6	157	2000	6.343	132.8	7.89	74.4	78.5	0	29.03
6	157	2100	4.978	168.7	13.51	70.9	86.5	0	29.01
6	157	2200	5.412	167.7	9.27	69.77	87.9	0	29.01
6	157	2300	6.905	175.1	6.705	67.3	98.5	0	28.99
7	158	0	7.47	173.8	8.32	67.32	95.2	0	28.99
7	158	100	8.01	177.4	8.32	65.14	99.7	0	28.99
7	158	200	8.79	173.4	9.34	64.28	100.3	0	28.97
7	158	300	7.61	166.5	11.59	63.69	100.4	0	28.97

Day	DATE JD	TIME 24H	WS MPH	WD Deg	SIGMA Deg	AT DegF	RH %	RN inch	BP inHg
7	158	400	8.93	170	10.18	62.58	100.4	0	28.95
7	158	500	9	175	10.8	62.43	100.4	0	28.94
7	158	600	7.73	184.6	9.37	62.77	100.4	0	28.95
7	158	700	9.64	185.8	9.4	63.13	100.4	0	28.95
7	158	800	8.62	184.6	10.66	67.53	97.2	0	28.98
7	158	900	9.27	184	9.77	71.9 (4)	88.6	0	28.99
7	158	1000	5.931	186.6	16.41	77.6 (4)	79.7	0	28.99
7	158	1100	3.586	347.2	48.03	83.7 (4)	67.24	0	28.99
7	158	1200	4.158	331.5	43.47	86.1	62.47	0	28.97
7	158	1300	5.22	283.1	42.02	87.1	61	0	28.96
7	158	1400	5.189	320.4	27.81	87.2	61.82	0	28.94
7	158	1500	4.462	293.1	43.84	88.6	59.43	0	28.92
7	158	1600	4.478	288.7	27.67	88.8	58.99	0	28.9
7	158	1700	5.508	298.7	22.99	87.5	61.05	0.01	28.9
7	158	1800	6.582	300.6	14.98	85.2	62.56	0	28.91
7	158	1900	5.449	305.8	12.95	81.8 (4)	70	0	28.92
7	158	2000	5.32	247.9	24.53	75.5 (4)	83.3	0	28.94
7	158	2100	6.416	179.8	18.95	71.4	93.9	0	28.95
7	158	2200	6.789	180.4	8.45	68.39	100.3	0	28.95
7	158	2300	8.92	183.2	9.22	66.84	100.4	0	28.94
8	159	0	9.92	184	9.24	66.5	100.4	0	28.95
8	159	100	6.614	185.4	10.53	66.44	100.4	0	28.96
8	159	200	7.28	218.3	38.3	66.13 (4)	100.3	0	28.98
8	159	300	14.4	353.4	10.98	58.48 (4)	100.3	0	29
8	159	400	10.94	342	14.04	54.96	100.4	0	29.03
8	159	500	10.18	343.6	13.77	52.85	100.3	0	29.06
8	159	600	11.7	341.4	13.03	51.37	100.3	0	29.11
8	159	700	10.07	348	14.74	49.88	100.3	0	29.13
8	159	800	10.94	342.5	12.43	49.47	100.3	0	29.17
8	159	900	12.12	340.6	13.06	49.46	100.3	0	29.2
8	159	1000	11	343.9	14.51	49.87	100.3	0	29.23
8	159	1100	10.81	333.5	14.1	50.08	100.3	0	29.27
8	159	1200	10.25	337.1	14.21	50.75	100.3	0	29.29
8	159	1300	8.6	332.9	19.34	51.9	100.3	0	29.31
8	159	1400	8.91	326.3	17.16	53.36	100.3	0	29.33
8	159	1500	8.21	325.5	17.39	54.35	100.1	0	29.34
8	159	1600	7.2	333.3	17.92	54.95	98.3	0	29.36
8	159	1700	7.26	322.2	21.28	55.32	96.8	0	29.37
8	159	1800	6.673	324	16.99	54.73	97.7	0	29.38
8	159	1900	7.41	340.3	13.04	53.76	100	0	29.38
8	159	2000	4.091	307.9	14.48	53.23	100.3	0	29.38
8	159	2100	3.127	337.8	17.02	51.29	100.3	0	29.4
8	159	2200	3.03	66.06	17.44	47.17	100.3	0	29.41
8	159	2300	4.363	44.22	7.28	45.87	100.3	0	29.4
9	160	0	3.72	20.65	9.76	44.08	100.3	0	29.39
9	160	100	3.983	27.44	11.7	44.07	100.3	0	29.39
9	160	200	2.208	47.76	12.98	43.13	100.3	0	29.41
9	160	300	1.922	79.7	6.87	41.65	100.3	0	29.41
9	160	400	2.864	22.53	11.35	41.37	100.3	0	29.43
9	160	500	1.687	75	6.648	41.93	100.3	0	29.45
9	160	600	0.537	33.66	7.27	46.47	100.3	0	29.47
9	160	700	2.261	167.7	16.26	49.17	100.3	0	29.49
9	160	800	3.617	242.2	34.43	52.37	100.3	0	29.51
9	160	900	3.048	270.9	40.15	55.42	100.3	0.01	29.55
9	160	1000	3.816	29.98	37.19	58.08 (4)	96.3	0.01	29.54
9	160	1100	6.18	62.41	34.81	64.95 (4)	71.1	0.02	29.57
9	160	1200	8	53.97	26.25	67.96	60.18	0	29.57
9	160	1300	7.19	50.87	34.12	70.7	52.03	0	29.53

Day	DATE JD	TIME 24H	WS MPH	WD Deg	SIGMA Deg	AT DegF	RH %	RN inch	BP inHg
9	160	1400	7.21	51.91	32.85	72.6	45.55	0	29.52
9	160	1500	5.387	62.73	58.28	74.5	43.51	0.01	29.52
9	160	1600	6.54	61.78	34.43	74.7	41.59	0	29.5
9	160	1700	4.92	63.83	37.67	75.2	40.18	0	29.48
9	160	1800	5.624	309.2	22.19	72.5	51.8	0	29.48
9	160	1900	7.27	358.1	10.67	68.85 (4)	59.52	0	29.48
9	160	2000	6.698	18.72	5.122	62.03 (4)	71.5	0	29.46
9	160	2100	6.99	28.3	7.8	60.16	76.7	0	29.44
9	160	2200	4.488	30.95	14.93	58.51	82.7	0	29.44
9	160	2300	0.785	312.3	5.638	55.04	98.7	0	29.42
10	161	0	0.552	326	2.91	56.59	99.8	0	29.42
10	161	100	1.702	119.4	8.95	57.39	98.1	0	29.4
10	161	200	1.467	156.4	8.95	57.48	96.9	0	29.38
10	161	300	2.919	162	14.75	57.35	98.7	0	29.37
10	161	400	3.259	162.9	14.04	56.94	100	0	29.37
10	161	500	3.86	134.1	9.32	57.6	97.5	0	29.36
10	161	600	2.485	140.6	16.01	58.86	95.3	0	29.36
10	161	700	4.029	161.7	14.4	60.31	95.7	0	29.37
10	161	800	4.585	170.3	13.47	61.86	95.2	0	29.38
10	161	900	6.461	156.5	15.1	66.45	92.3	0	29.38
10	161	1000	10.28	183.9	10.49	69.73	92	0	29.39
10	161	1100	7.67	175.1	21.64	74.4	87.9	0	29.38
10	161	1200	5.168	173.2	32.53	79	79.8	0.01	29.37
10	161	1300	5.844	144.9	19.17	77.6	84.1	0	29.36
10	161	1400	7.91	115.6	20.88	74.5	95.1	0.21	29.33
10	161	1500	9.73	103.7	10.82	75.5	100.4	0	29.3
10	161	1600	8.8	109.7	10.79	76	100.4	0	29.28
10	161	1700	9.3	122	12.07	76.8	99.5	0	29.27
10	161	1800	11.02	168	11.37	73	100.3	0.04	29.25
10	161	1900	8.97	165.7	12.43	68.86	100.4	0.04	29.24
10	161	2000	6.216	175.6	12.87	67.29	100.4	0	29.23
10	161	2100	9.63	166.7	11.24	67.49	100.4	0	29.23
10	161	2200	11.66	173.3	9.77	67.89	100.4	0	29.23
10	161	2300	10.3	180.6	9.73	65.9	100.4	0	29.22
11	162	0	11.72	177.6	8.79	65.65	100.3	0	29.21
11	162	100	11.39	179.2	8.6	65.56	100.3	0	29.19
11	162	200	10.82	180.8	8.49	65.49	100.3	0	29.18
11	162	300	11.14	179.4	8.26	65.16	100.3	0	29.18
11	162	400	10.94	181.4	8.64	64.79	100.3	0	29.17
11	162	500	9.72	188.9	10.23	64.32	100.3	0	29.16
11	162	600	10.82	183.5	10.07	65.61	100.4	0	29.18
11	162	700	11.11	182.6	9.26	66.34	100.3	0	29.18
11	162	800	9.83	184.7	9.4	70.4	100.4	0	29.2
11	162	900	10.56	190.4	9.76	73.3	100.4	0	29.21
11	162	1000	9.87	185.6	10.39	75.7	100.2	0	29.2
11	162	1100	8.87	184.2	13.39	79.7	92.3	0	29.21
11	162	1200	8.22	244.1	19.6	82.5	78.9	0	29.2
11	162	1300	10.61	268.4	16.87	85.1	65.13	0	29.19
11	162	1400	8.78	246.4	16.18	85.8	62.87	0	29.17
11	162	1500	7.45	234.8	17.38	86.1	61.87	0	29.15
11	162	1600	8.1	293	16.73	82.8	69.08	0	29.15
11	162	1700	8.37	304	14.88	78.6	74.4	0	29.14
11	162	1800	8.39	299.6	15.54	77 (4)	70.6	0	29.13
11	162	1900	11.96	312.9	12.39	71.1 (4)	79.8	0	29.15
11	162	2000	8.72	307.1	14.36	67.94	80.4	0	29.14
11	162	2100	4.431	324.6	19.97	66.51	86.5	0	29.15
11	162	2200	4.888	18.1	11.4	62.47	100.3	0.02	29.16
11	162	2300	4.919	358	11.72	60.4	100.4	0.04	29.16

Day	DATE JD	TIME 24H	WS MPH	WD Deg	SIGMA Deg	AT DegF	RH %	RN inch	BP inHg
12	163	0	5.795	359.9	9.64	58.89	100.4	0.04	29.15
12	163	100	4.183	353	9.67	57.66	100.3	0.01	29.14
12	163	200	3.033	338.5	14.63	57.08	100.3	0.02	29.13
12	163	300	3.243	322.5	15.51	56.31	100.3	0	29.11
12	163	400	3.424	296.2	13.62	55.82	100.3	0	29.11
12	163	500	2.984	293.4	12.47	55.3	100.3	0.01	29.1
12	163	600	2.868	298.4	13.19	55.02	100.3	0.03	29.11
12	163	700	5.631	318	15.23	55.28	100.3	0	29.11
12	163	800	7.25	318.5	14.44	55.42	100.4	0	29.13
12	163	900	6.647	330.3	12.96	55.41	100.3	0.01	29.14
12	163	1000	7.59	336	11.86	55.97	100.3	0	29.14
12	163	1100	9.01	331.4	13.23	55.85	100.3	0	29.15
12	163	1200	8.45	330.3	14.61	57.84	100.3	0	29.17
12	163	1300	8.75	324.3	19.47	60.13	98.4	0	29.18
12	163	1400	9.6	321.7	17.37	61.76	92	0	29.18
12	163	1500	10.68	316.9	16.34	63.43	84.1	0	29.17
12	163	1600	10.54	334.8	14.77	62.44	84.4	0	29.16
12	163	1700	9.53	345.9	19.69	64.16	76.8	0	29.17
12	163	1800	7.66	346.2	14.67	64.26	70.9	0	29.18
12	163	1900	5.488	351.7	10.57	63.7 (4)	71.8	0	29.19
12	163	2000	3.348	20.26	11.27	57.68 (4)	88.3	0	29.16
12	163	2100	3.684	65.76	6.187	50.03 (4)	100.3	0	29.13
12	163	2200	1.929	136.1	23.69	47.5	100.3	0	29.13
12	163	2300	2.441	158.2	14.18	46.57	100.3	0	29.13
13	164	0	2.709	159.8	14.95	46.97	100.3	0	29.13
13	164	100	3.993	165.9	12.03	47.1	100.3	0	29.13
13	164	200	3.865	169.2	10.2	46.66	100.3	0	29.13
13	164	300	3.787	174	10.29	45	100.3	0	29.12
13	164	400	4.419	176.4	7.75	45.42	100.3	0	29.12
13	164	500	4.398	184	8.98	45.12	100.3	0	29.12
13	164	600	4.124	167.6	10.44	47.34	100.3	0	29.16
13	164	700	4.657	187	12.76	51.77 (4)	100.3	0	29.21
13	164	800	3.784	209.9	25.96	57.03 (4)	98.6	0	29.24
13	164	900	5.484	323.8	31.19	61.93	83.7	0	29.25
13	164	1000	5.555	329.2	28.56	65.68	74.1	0	29.25
13	164	1100	5.788	330.9	39.12	69.52	63.42	0	29.25
13	164	1200	8.35	316.7	26.49	70.7	55.99	0	29.23
13	164	1300	9.25	340.7	24.23	72.5	53.76	0	29.21
13	164	1400	9.15	334.4	22.15	74	51.23	0	29.2
13	164	1500	10.17	330.8	22	74.8	44.36	0	29.19
13	164	1600	10.87	343.2	17.83	75.2	41.86	0	29.18
13	164	1700	9.02	347.6	16.04	74.4	44.14	0	29.18
13	164	1800	7.84	4.74	14.69	73.6	45.48	0	29.18
13	164	1900	5.1	12.74	8.47	70.1	54.38	0	29.17
13	164	2000	4.168	48.07	8.36	65.27	69.45	0	29.16
13	164	2100	3.407	47.52	6.591	57.94	91.6	0	29.15
13	164	2200	2.219	35.85	30.14	55.15	98.9	0	29.15
13	164	2300	2.595	56.68	14.28	53.8	99.6	0	29.14
14	165	0	2.447	153.9	10.79	52.12	100.3	0	29.14
14	165	100	4.072	163.6	11.35	52.78	100.3	0	29.15
14	165	200	5.008	180.1	7.2	51.86	100.3	0	29.14
14	165	300	6.409	178.5	8.19	51.87	100.3	0	29.15
14	165	400	4.742	176.3	9.01	52.09	100.3	0	29.15
14	165	500	5.345	178.1	9.47	51.21	100.3	0	29.16
14	165	600	7.09	178.9	8.56	52.59	100.3	0	29.19
14	165	700	6.353	181.7	8.71	56.03	100.3	0	29.22
14	165	800	4.623	241.9	20.25	62.12	97.4	0	29.26
14	165	900	8.8	315.1	17.53	66.44	90.5	0	29.29

Day	DATE JD	TIME 24H	WS MPH	WD Deg	SIGMA Deg	AT DegF	RH %	RN inch	BP inHg
14	165	1000	11.03	331.5	15.4	69.14	85	0	29.3
14	165	1100	11.16	327.2	17.94	71.7	78.1	0	29.31
14	165	1200	13.22	336.7	16.34	72.6	70.3	0	29.32
14	165	1300	14.25	335.8	14.79	72.7	72.2	0	29.31
14	165	1400	13.83	349.3	14.58	73.4	68.46	0	29.32
14	165	1500	14.92	349.7	14.92	73.6	54.37	0	29.33
14	165	1600	13.95	348.1	16.53	73.2	45.25	0	29.33
14	165	1700	13.86	349.7	14.23	72.3	46.43	0	29.34
14	165	1800	11.85	2.254	15.06	71.5	48.26	0	29.34
14	165	1900	9.68	353.9	11.13	69.21	50.39	0	29.35
14	165	2000	5.636	347.6	9.13	63.4	61.19	0	29.35
14	165	2100	5.171	2.915	6.149	57.86	73.8	0	29.33
14	165	2200	4.354	8.74	3.892	55.24	81.9	0	29.34
14	165	2300	1.987	8.77	4.431	51.63	96.7	0	29.35
15	166	0	2.596	168.8	11.76	50.11	100.2	0	29.36
15	166	100	4.177	170.7	10.92	50.34	100.3	0	29.36
15	166	200	5.873	183	6.628	50.27	100.3	0	29.37
15	166	300	5.717	179.2	7.17	49.76	100.3	0	29.38
15	166	400	5.695	173.6	6.612	48.92	100.3	0	29.39
15	166	500	5.308	186.8	8.17	48.2	100.3	0	29.41
15	166	600	5.785	177.7	9.1	49.96	100.3	0	29.45
15	166	700	6.942	183.6	9.31	53.55	100.2	0	29.51
15	166	800	5.019	202.8	19.74	59.11	87.8	0	29.55
15	166	900	4.394	302.8	32.87	66.2	72.2	0	29.59
15	166	1000	5.59	8.5	31.52	70.7	59.99	0	29.6
15	166	1100	5.621	301	35.51	72.7	52.19	0	29.6
15	166	1200	8.12	313.9	29.16	74.3	42.87	0	29.6
15	166	1300	7.39	340.2	30.89	75.7	41.73	0	29.59
15	166	1400	8.97	311.6	24	76.2	40.66	0	29.59
15	166	1500	8.43	327.7	28.77	76.8	40.09	0	29.58
15	166	1600	8.21	343.5	21.98	76.6	40.8	0	29.58
15	166	1700	8.85	1.943	13.51	75.1	42.21	0	29.58
15	166	1800	9.42	16.12	11.53	73	42.95	0	29.58
15	166	1900	6.351	19.37	7.59	68.54	50.05	0	29.58
15	166	2000	3.292	51.6	11.76	62.64	71.9	0	29.58
15	166	2100	2.909	104.9	15.92	53.78	92.9	0	29.56
15	166	2200	2.142	150.1	8.92	51.07	97	0	29.56
15	166	2300	2.784	146.6	7.25	48.84	100.3	0	29.57
16	167	0	4.928	164.8	10.14	51.53	99.3	0	29.58
16	167	100	5.126	170	8.47	51.39	100.3	0	29.58
16	167	200	4.579	170.3	10.23	50.12	100.3	0	29.59
16	167	300	4.868	169.9	9.52	49.15	100.3	0	29.59
16	167	400	5.948	167.6	8.18	49.31	100.3	0	29.6
16	167	500	5.441	173.2	7.74	48.84	100.3	0	29.62
16	167	600	4.806	165.2	11.52	50.63	100.3	0	29.65
		Max	29.76		74.5	88.8	100.4		29.82
		Min	0.156		0	-0.861	26.84		28.49
		Avg	8.5952		12.96	44.0857	86.1049		29.3070

Notes:

A- Exceeds AMP criteria parameter for maximum wind speed (>25m/s); results are considered valid.

B- Precipitation gauge is suspected of malfunction; results are invalid.

C- Meteorological station temporarily not in operation for preventative maintenance activities.

(1)- Exceeds AMP criteria: does not vary > 0.1 m/s for three (3) consecutive hours; results are considered valid.

(2)- Exceeds AMP criteria: does not vary > 1 degree for three (3) consecutive hours; results are considered valid.

(3)- Wind direction vane not functioning; results are considerd invalid.

(4)- Exceeds AMP criteria: greater than 5 degrees F change from previous hour; results are considered valid.

INTERNATIONAL TECHNOLOGY CORPORATION

September 12, 1994

Mr. Randall Battaglia
Environmental Coordinator
Seneca Army Depot
Romulus, New York 14541-5001

Project No. 519070

Transmittal of DRAFT Air Emission and Water Discharge Permits for Ash Landfill Remediation Project

Dear Mr. Battaglia:

Please find enclosed one (1) set of copies of the DRAFT air emissions and water discharge permit authorizations for the activities at the Ash Landfill Remediation project. These permit authorizations have been developed to meet all applicable New York State regulations for air emissions and water discharges. The permit submittals included here have been distributed internally to the project team for review and comments.

Please take the time to review these documents as you see fit. Our goal is to finalize the permit conditions by the end of this week for submittal to the State early next week. Please feel free to contact the undersigned at (716) 271-6430 if you have any questions.

Thank you for your time.

Respectfully Submitted,

IT CORPORATION

Jeffrey D. Korb
Technical Manager- Air

Peter W. Coutts
Technical Manager

JDK:PWC:jk
Enclosure

cc: Mr. Andrew Winslow- Technical Manager, USACE, Omaha District
Mr. Douglas Wehner- IT Corporation, Cincinnati, OH

INTERNATIONAL TECHNOLOGY CORPORATION

September 12, 1994

Mr. Robert Scott
Permit Administrator
New York State
Department of Environmental Conservation
Region 8 Office
6274 East Avon-Lima Road
Avon, New York 14414

Project No. 519070

Request for Authorization to Construct and Operate Emission Point Sources

Dear Mr. Scott:

With this letter, IT Corporation (IT) requests your review and authorization to construct and operate two (2) separate emission point sources as part of a U.S. Army Corps of Engineers (USACE) Rapid Response remedial action at the Seneca Army Depot in Romulus, New York. IT discussed this request with you on August 11, 1994 to determine the appropriate requirements needed to secure the authorization to emit. Attached to this letter is the information for both proposed sources that we believe necessary to meet the "substantive elements" of the NYSDEC-administered air permit program, outlined in NYSDEC Form 76-11-12.

The Seneca Army Depot Rapid Response project involves the excavation and treatment of contaminated soils from a landfill on the Seneca Army base property. Soils contaminated primarily with chlorinated hydrocarbons and polynucleated aromatic compounds will be removed and treated by a low temperature thermal desorption (LTTD) process, and ultimately backfilled after meeting predetermined clean-up criteria. The LTTD system will vent off-gas during operation and will require authorization to emit. In addition, the excavation areas will be dewatered by a collection trench designed to intercept groundwater and collect precipitation and run-off. The collected water will be routed to a collection tank and batch-treated via an air stripper prior to discharge. The air stripper constitutes the other emission point source.

The Seneca Army Depot Rapid Response project is on a fast-track to implementation and completion. The most current project schedule is as follows:

August 30, 1994-	Baseline ambient monitoring and on-site meteorological station set-up and calibration;
September 19, 1994-	Confirmatory soil boring and surveying activities begin
September 26, 1994-	On-site activities commence with site clearing, initial excavation, and equipment set-up

October 3, 1994- Equipment start-up/prove-out event (approximate date) and full project implementation.

December 23, 1994- On-site project activities to be completed (approximate).

Based on this schedule, we will require authorization to construct and operate the two emission point sources in a timely fashion in order to remain on schedule with the USACE's schedule as listed above. IT is willing to provide any additional information required by the NYSDEC or answer any questions in order to facilitate the NYSDEC's effort.

Once again, please contact the undersigned at (716) 271-6430 if you have any questions or comments. IT wishes to thank you ahead of time and appreciates your prompt and timely response to this issue.

Respectfully Submitted,

IT CORPORATION

Jeffrey D. Korb
Technical Manager- Air

Peter W. Coutts
Project Technical Manager

JDK:PWC:jk
Attachments

cc: Mr. Kamal Gupta- Div. of Hazardous Waste Remediation, NYSDEC, Albany, NY
Mr. Andrew Winslow- U.S. Army Corps of Engineers, Omaha District
Mr. Randall Battaglia- U.S. Army, Seneca Army Depot
Mr. Douglas Wehner- IT Corporation, Cincinnati, OH

Seneca Army Depot
Rapid Response- Ash Landfill Remediation Project

DRAFT

Emission Point SEDA01

Basic Information

Operator: Department of the U.S. Army
Seneca Army Depot
Route 96
Romulus, New York 14541-5001

Operator Representative: Randall Battaglia
Environmental Coordinator
(607) 869-1532

Facility/Area: Seneca Army Depot
Ash Landfill

Start-Up Date: September 28, 1994

Source Parameters

Ground Elevation (ft.):	648
Height above Structure (ft.):	NA
Stack Height (ft.):	56
Inside Dimensions (in.):	40
Exit Temperature (°F):	1,380
Exit Velocity (ft./sec.):	90
Exit Flow Rate (ACFM):	37,000
Hours of Operation (hrs./day):	24 hours
Hours of Operation (day/yr.):	200 days
% Operation by Season:	10% Winter 0% Spring 0% Summer 90% Fall

Process Description

Emission point is the off-gas vent for the low temperature thermal desorption (LTTD) machine and will release the off-gas in a continuous stream. Soil will enter the LTTD via a conveyor after separated from large-scale debris and will be treated at greater than 900°F operating temperature for a duration of 8-12 minutes. The treated soil will be sampled and staged after treatment.

Emission Control Device(s)

Thermal Oxidizer (operating temperature 1400 °F)- Code 10
Baghouse- Code 02

Contaminant List

Trichloroethene	79-01-6
1,2-Dichloroethene	156-59-2
Vinyl chloride	75-01-4
Toluene	108-88-3
Xylenes	1330-20-7
Hydrogen chloride	7647-01-0
Particulates	NY75-00-0

Emission Calculations

NOTE: See attached SEDA01 emission impact calculations spreadsheet

The LTTD emissions are calculated based on a worst case estimate of potential soil material contamination for both volatile organic compounds (VOCs) and polynucleated aromatic hydrocarbons (PAHs). The VOCs and PAHs are the primary chemicals of concern for air emissions at the SEDA Ash Landfill site and are the types of chemicals that will be remediated by the LTTD system. Because the matrix of material to be remediated at the Ash Landfill site includes soil and other organic material, particulate matter may also be a concern for air emissions.

The LTTD system will be operating at a temperature of greater than 900 °F in order to adequately treat the soil material. At temperatures in this range, it is expected that the VOCs present in the soil material will be chemically destroyed and removed from the soil. This reaction in the LTTD will produce primarily hydrogen chloride, carbon dioxide and water vapor by-products, as well as any remaining trace amounts of the original VOCs still present. These compounds are expected constitute the main emission contaminants for the SEDA01 air emission point. In addition, particulate matter may be emitted.

For SEDA01, the emission rate potential have been calculated by the following equation:

$$\frac{\text{ug/kg} * \text{Tons/hr} * 2000 \text{ pounds/Ton}}{10^6 \text{ ug/g} * 2.205 \text{ pounds/kg} * 453.6 \text{ g/lbs.}} = \text{pounds/hour (lbs./hr.)}$$

where, ug/kg is soil VOC concentration and
Tons/hr. is the LTTD process throughput rate;

The LTTD will process a maximum of 20 tons material per hour. With the worst case maximum concentrations shown in the spreadsheet table, the emission rate potential for each compounds has been calculated. With the addition of the thermal oxidizer and baghouse as air pollution control devices, to control VOCs and particulate matter respectively, the emission rate calculations were adjusted to reflect the control technologies' effect. The final emission rate for each compound was calculated using the following equation:

lbs./hr. - (lbs./hr.* % control) = lbs./hr. emission rate

Emission impact calculations were also performed according to NYSDEC Air Guide-1 guidelines to determine potential long-term and short-term impacts of the emissions from SEDA01. Based on these calculations, the worst case potential air emissions from the LTTD system operating at its' maximum operating conditions will meet all applicable NYSDEC air emission requirements to emit as indicated.

To support the above calculations and assumptions, source testing of LTTD operation will be performed during the project Start-Up/Prove-Out event. The source testing is outlined in the project's Air Monitoring Plan (AMP) and will include: USEPA Compendium Method TO-14 for VOCs; BIF Method 0050 for hydrogen chloride and particulate matter; and SW-846 Method 0010/8270 for semivolatile compounds (SVOCs). Results from this testing will be reported during the project update meetings and in the final report at project completion. In addition, we are currently investigating the applicability of performing a screening model (such as TSCREEN or SCREEN2) on the proposed LTTD operations as an additional check.

Seneca Army Depot
LTTD TREATMENT EMISSIONS
NO CONTROL

COMPOUNDS	CAS No.	AGC (ug/m3)	SGC (ug/m3)	Pot. CONC (ug/kg)	Pot. Emission (lb./hr.)	% Control	Actual Emissions (lbs./hr.)	Actual Emissions (lbs./yr.)	Ca (ug/m3)	Cp (ug/m3)	Cst (ug/m3)	PASS AGC	PASS Pot. AGC	PASS SGC	He	He(2.16)
TRICHLOROETHENE (TCE)	79-01-6	0.45	33000	540000	22.4883342	0.00	2.25E+01	1.97E+05	15.88518	15.86893	6665	N	N	Y	56	5971.54
1,2-DICHLOROETHENE (DCE)	156-59-2	1900	190000	79000	3.28996	0.00	3.29E+00	2.88E+04	2.32394	2.32157	975	Y	Y	Y	56	5971.64
VINYL CHLORIDE	75-01-4	0.02	1300	920	0.03831346	0.00	3.83E-02	3.35E+02	0.02706	0.02704	11.36	N	N	Y	56	5971.54
TOLUENE	108-88-3	2000	89000	5700	0.23737686	0.00	2.37E-01	2.08E+03	0.16768	0.16751	70.35	Y	Y	Y	56	5971.54
XYLENES	1330-20-7	300	100000	17000	0.70796608	0.00	7.07E-01	6.20E+03	0.50009	0.49958	209.82	Y	Y	Y	56	5971.54
HYDROGEN CHLORIDE	7647-01-0	167	1667	100000	4.16450633	0.00	4.16E+00	3.64E+04	2.94170	2.93869	1234.25	Y	Y	Y	56	5971.54
PARTICULATES	NY75-00-0	----	150	100000	4.16450633	0.00	4.16038	3.64E+04	2.94170	2.93869	1234.25	Y	Y	N	56	5971.54

Seneca Army Depot
LTTD TREATMENT EMISSIONS
WITH CONTROL

COMPOUNDS	CAS No.	AGC (ug/m3)	SGC (ug/m3)	Pot. CONC (ug/kg)	Pot. Emission (lb./hr.)	% Control	Actual Emissions (lbs./hr.)	Actual Emissions (lbs./yr.)	Ca (ug/m3)	Cp (ug/m3)	Cst (ug/m3)	PASS AGC	PASS Pot. AGC	PASS SGC	He	He(2.16)
TRICHLOROETHENE (TCE)	79-01-6	0.45	33000	540000	22.4883342	0.99	2.25E-01	1.97E+03	0.15901	0.15885	67	Y	Y	Y	56	5971.54
1,2-DICHLOROETHENE (DCE)	156-59-2	1900	190000	79000	3.28996	0.99	3.29E-02	2.88E+02	0.02326	0.02324	10	Y	Y	Y	56	5971.54
VINYL CHLORIDE	75-01-4	0.02	1300	920	0.03831346	0.99	3.83E-04	3.36E+00	0.00027	0.00027	0.11	Y	Y	Y	56	5971.54
TOLUENE	108-88-3	2000	89000	5700	0.23737686	0.99	2.37E-03	2.08E+01	0.00168	0.00168	0.70	Y	Y	Y	56	5971.54
XYLENES	1330-20-7	300	100000	17000	0.70796608	0.99	7.08E-03	6.20E+01	0.00501	0.00500	2.10	Y	Y	Y	56	5971.54
HYDROGEN CHLORIDE	7647-01-0	167	1667	100000	4.16450633	0.99	4.16E-02	3.65E+02	0.02945	0.02942	12.35	Y	Y	Y	56	5971.54
PARTICULATES	NY75-00-0	----	150	100000	4.16450633	0.90	0.41645	3.65E+03	0.29446	0.29416	123.55	Y	Y	Y	56	5971.54

AGC= Ambient Guideline Concentration
SGC= Short-Term Guideline Concentration
Ca= Annual Impact concentration
Cp= Potential Annual Impact concentration
Cst= Short-Term Impact concentration
He= Effective stack height

DRAFT

INTERNATIONAL TECHNOLOGY CORPORATION

Seneca Army Depot
Rapid Response- Ash Landfill Remediation Project

DRAFT

Emission Point SEDA02

Basic Information

Operator: Department of the U.S. Army
Seneca Army Depot
Route 96
Romulus, New York 14541-5001

Operator Representative: Randall Battaglia
Environmental Coordinator
(607) 869-1532

Facility/Area: Seneca Army Depot
Ash Landfill

Start-Up Date: September 28, 1994

Source Parameters

Ground Elevation (ft.):	647
Height above Structure (ft.):	NA
Stack Height (ft.):	30
Inside Dimensions (in.):	104
Exit Temperature (°F):	60/ambient
Exit Velocity (ft./sec.):	0.00015
Exit Flow Rate (ACFM):	300
Hours of Operation (hrs./day):	24 hours
Hours of Operation (day/yr.):	200 days
% Operation by Season:	10% Winter 0% Spring 0% Summer 90% Fall

Process Description

Emission point is the off-gas vent for the water treatment air stripper. The air stripper system will release the off-gas created by the aeration of water in a sieved filter bed and will occur in a continuous stream while in operation. The air stripper will be operated as a batch operation, with batch treatment being performed approximately for every 40,000 gallons of water collected. Water will enter the stripper bed and will be treated at ambient/operating temperature. The treated water will be stored after treatment in surge/storage tanks prior to discharge.

Emission Control Device(s)

None

Contaminant List

Trichloroethene	79-01-6
1,2-Dichloroethene	156-59-2
Vinyl chloride	75-01-4
Chloroform	67-66-3
1,1-Dichloroethene	75-35-4
1,1-Dichloroethane	75-34-3
1,1,1-Trichloroethane	71-55-6
Tetrachloroethene	127-18-4
Benzene	71-43-2
Toluene	108-88-3

Ethylbenzene	100-41-4
Xylenes	1330-20-7
Naphthalene	91-20-3
Pentachlorophenol	87-86-5
Phenol	108-95-2
4-Methylphenol (p-Cresol)	106-44-5
2-Methylnaphthalene	91-57-6
Di-ethyl phthalate	84-66-2
Di-n-butyl phthalate	87-74-2
Particulates	NY75-00-0

Emission Calculations

NOTE: See Attached SEDA02 emission calculations spreadsheet

The air stripper emission calculations are based on worst and realistic case estimates of potential water concentrations from the groundwater and collected precipitation and run-off. For this effort, the guidance found in the NYSDEC Air Guide-29, "Air Stripper and Soil Vapor Extraction Control Strategy," dated May 1, 1991, was used to determine appropriate emission rate estimates and impact analyses.

The air stripper system to be used for this project will be a horizontal sieved bed array with a thirty (30) foot emission stack. The system will also include surge/storage tanks both prior to and after the air stripper equipment. Water collected in a collection trench will be piped to the first pair of surge/storage tanks (working volume of 40,000 gallons) where it will be stored until they are near capacity. Water will be sent from the tanks on a batch basis, treated, and flow into the other surge/storage tank pair, where it will be stored pending the receipt of analytical results on the effluent. Acceptable results will allow discharge to the existing drainage swale. Air emissions from this system are expected to be primarily VOCs, with trace amounts of PAHs and particulate compounds. Emission rates and impacts are indicative of larger than expected emission rate potentials to provide a large buffer for acceptable impacts.

For SEDA02, the emission rate estimates have been generally calculated by the following equation:

ppb VOC in water * MW/24.45 * m^3/35.13 ft^3* 7.5 ft^3/gallon *
gallons/min. flow * min./hr. * g/10^6 ug * lbs./ 453.6 g = Emission rate (lbs./hr.)

The air stripper emissions calculated from this equation must not exceed one-half of each respective AGC value and the emission rates must be below the State guidance emission rate of 0.022 lbs./hr. for a thirty (30) foot stack in order to be acceptable. Based on this criteria, the emission rates expected during operation of this air stripper are not expected to exceed one-half AGCs or the emission rate level for any contaminant; also, by meeting the emission rate level, no additional control equipment should be required.

To support the above calculations and assumptions, additional mass balance calculations based on actual air stripper operational parameters in the field and the results of analytical testing on the influent and effluent water will be performed on a monthly basis. Results from this analysis will be reported during project update meetings and in the final report at project completion.

Seneca Army Depot
Dewater Treatment/Air Stripper
Air Emission Estimates and Impact Assessment with six (6) tray horizontal bed stripper

Parameters:	
Water Flow Rate	50 gpm
Air Flow Rate	300 ACFM
Water Temperature	55
Air to Water Ratio	45:1

COMPOUNDS	CAS No.	AGC (ug/m3)	SGC (ug/m3)	HALF AGC	ppb H2O	Emission (lb./hr.)	% Removal	Actual Emissions (lbs./hr.)	Actual Emissions (lbs./yr.)	Ca (ug/m3)	Cp (ug/m3)	Cst (ug/m3)	PASS AGC	PASS ER	He	He(2.16)
TRICHLOROETHENE (TCE)	79-01-6	0.45	33000	0.23	37000	5.00E-03	0.999979	1.18E-03	10.38	0.00323	0.00322	1.35	Y	Y	30	1550.89
1,2-DICHLOROETHENE (DCE)	156-59-2	1900	190000	950	74000	7.38E-03	0.999955	8.74E-04	7.66	0.00238	0.00238	1.00	Y	Y	30	1550.89
VINYL CHLORIDE	75-01-4	0.02	1300	0.01	230000	1.48E-02	1.000000	5.64E-04	4.94	0.00153	0.00153	0.64	Y	Y	30	1550.89
CHLOROFORM	67-66-3	23	980	12	210	1.99E-05	0.999314	8.31E-04	7.28	0.00226	0.00226	0.95	Y	Y	30	1550.89
1,1-DICHLOROETHENE	75-35-4	0.02	2000	0	170	1.86E-05	1.000000	9.57E-04	8.39	0.00261	0.00260	1.09	Y	Y	30	1550.89
1,1-DICHLOROETHANE	75-34-3	500	190000	250	160	6.43E-05	0.999862	3.52E-03	30.85	0.00959	0.00958	4.02	Y	Y	30	1550.89
1,1,1-TRICHLOROETHANE	71-55-6	1000	450000	500	72	1.50E-05	0.999994	1.82E-03	15.98	0.00496	0.00496	2.08	Y	Y	30	1550.89
TETRACHLOROETHENE	127-18-4	0.08	81000	0.04	2	4.16E-07	0.999992	1.82E-03	15.98	0.00496	0.00496	2.08	Y	Y	30	1550.89
BENZENE	71-43-2	0.12	30.00	0.06	170	3.12E-05	0.998796	1.61E-03	14.08	0.00438	0.00437	1.84	Y	Y	30	1550.89
TOLUENE	108-88-3	2000	89000	1000	880	2.29E-04	0.999744	2.28E-03	19.93	0.00619	0.00619	2.60	Y	Y	30	1550.89
ETHYLBENZENE	100-41-4	1000	100000	500	180	5.12E-05	0.999879	2.49E-03	21.83	0.00678	0.00678	2.85	Y	Y	30	1550.89
XYLENES (Total)	1330-20-7	300	100000	150	540	7.12E-05	0.996819	1.16E-03	10.12	0.00315	0.00314	1.32	Y	Y	30	1550.89
NAPHTHALENE	91-20-3	120	12000	60	66	1.55E-05	0.128110	2.06E-03	18.03	0.00560	0.00560	2.35	Y	Y	30	1550.89
PENTACHLOROPHENOL	87-86-5	1.20	120	0.60	54	1.27E-05	0.003066	2.06E-03	18.03	0.00560	0.00560	2.35	Y	Y	30	1550.89
PHENOL	108-95-2	9.60	4500	4.80	5	1.43E-06	0.000344	2.51E-03	21.99	0.00683	0.00683	2.87	Y	Y	30	1550.89
4-METHYLPHENOL (p-Cresol)	106-44-5	24	2400	12	4	4.45E-07	0.000311	9.74E-04	8.53	0.00265	0.00265	1.11	Y	Y	30	1550.89
2-METHYLNAPHTHALENE	91-57-6	1	10	0.50	12	1.75E-06	0.174285	1.28E-03	11.22	0.00349	0.00348	1.46	Y	Y	30	1550.89
DIETHYL PHTHALATE	84-66-2	12	1200	6.00	1	2.28E-07	0.120120	2.00E-03	17.53	0.00545	0.00544	2.29	Y	Y	30	1550.89
DI-n-BUTYL PHTHALATE	87-74-2	120	1190	60	1	2.86E-07	0.120120	2.51E-03	21.96	0.00682	0.00682	2.86	Y	Y	30	1550.89

DRAFT

ENVIRONMENTAL TECHNOLOGY CORPORATION

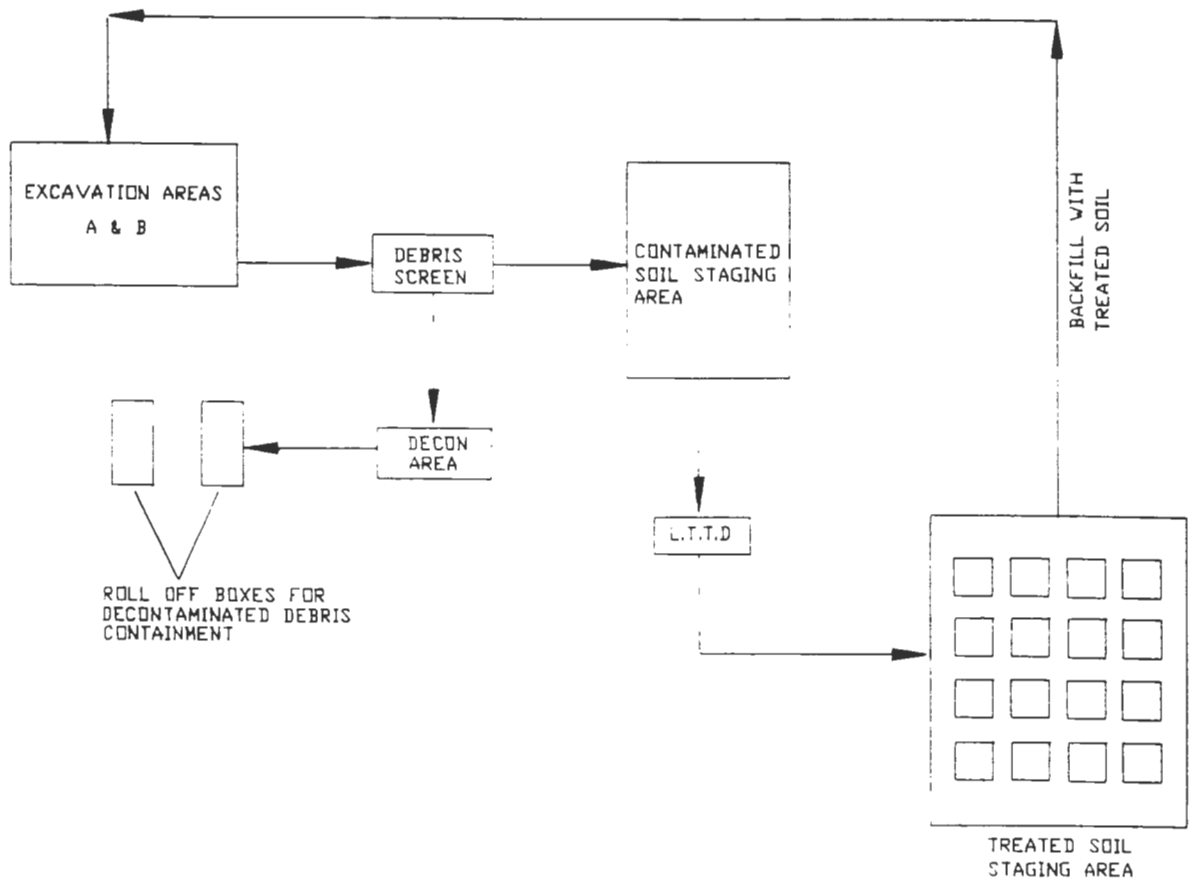

DRAFT

FIGURE
PROCESS SCHEMATIC - SOIL

PREPARED FOR

SENECA ARMY DEPOT
ROMULUS, NEW YORK

INTERNATIONAL
TECHNOLOGY
CORPORATION

DRAWING NUMBER 5 0-A1

CHECKED BY

APPROVED BY

DJB 8/17/94

DR BY

132298

© 1984 IT CORPORATION
ALL COPYRIGHTS RESERVED

"Do Not Scale This Drawing"

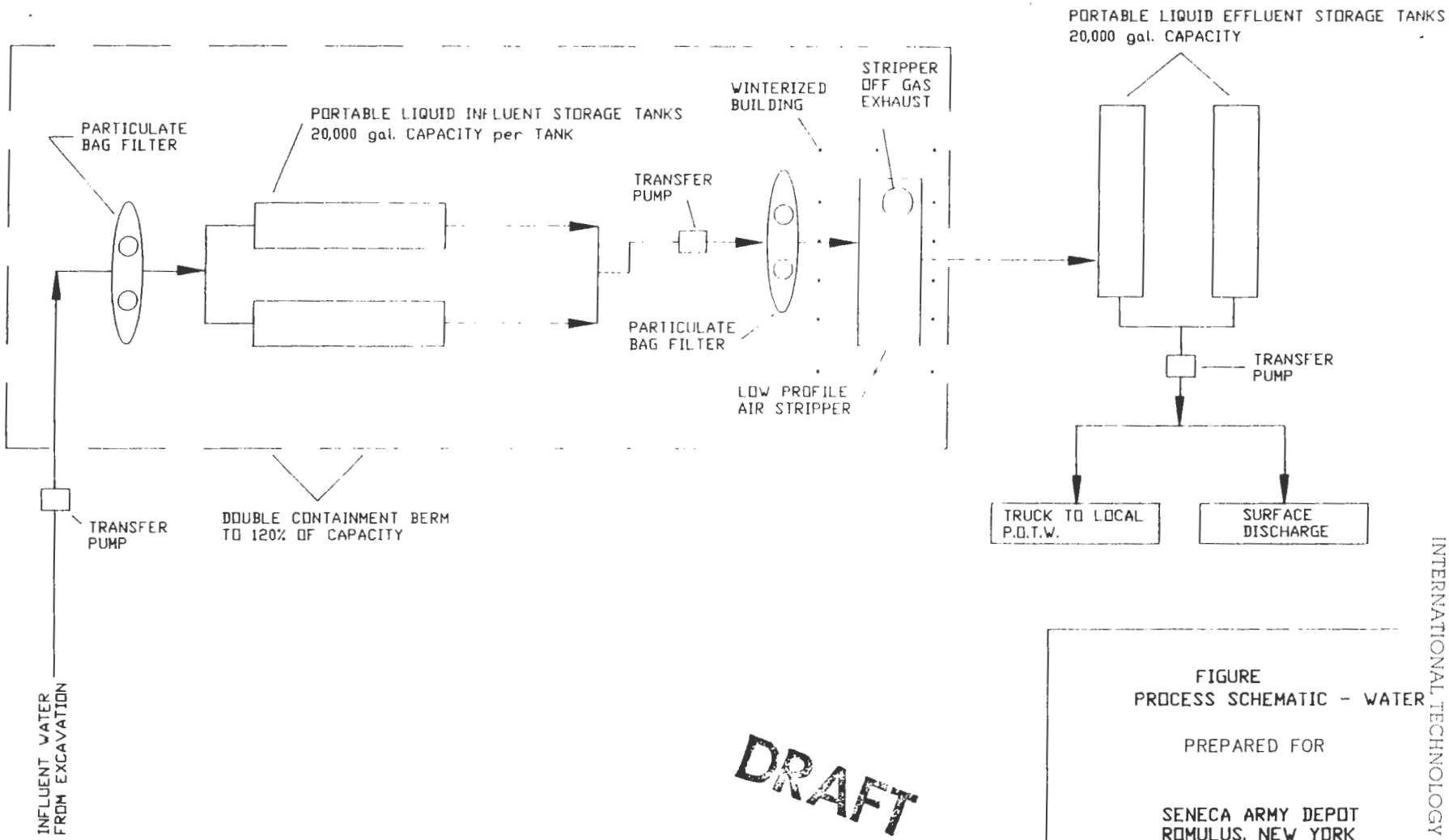

DRAFT

FIGURE
PROCESS SCHEMATIC - WATER

PREPARED FOR

SENECA ARMY DEPOT
ROMULUS, NEW YORK

INTERNATIONAL TECHNOLOGY CORPORATION

INTERNATIONAL TECHNOLOGY CORPORATION

DRAWN BY	DJB	CHECKED BY		DRAWING NUMBER	519070-A2
	8/18/94	APPROVED BY			

132298

© 1984 IT CORPORATION
ALL COPYRIGHTS RESERVED

"Do Not Scale This Drawing"

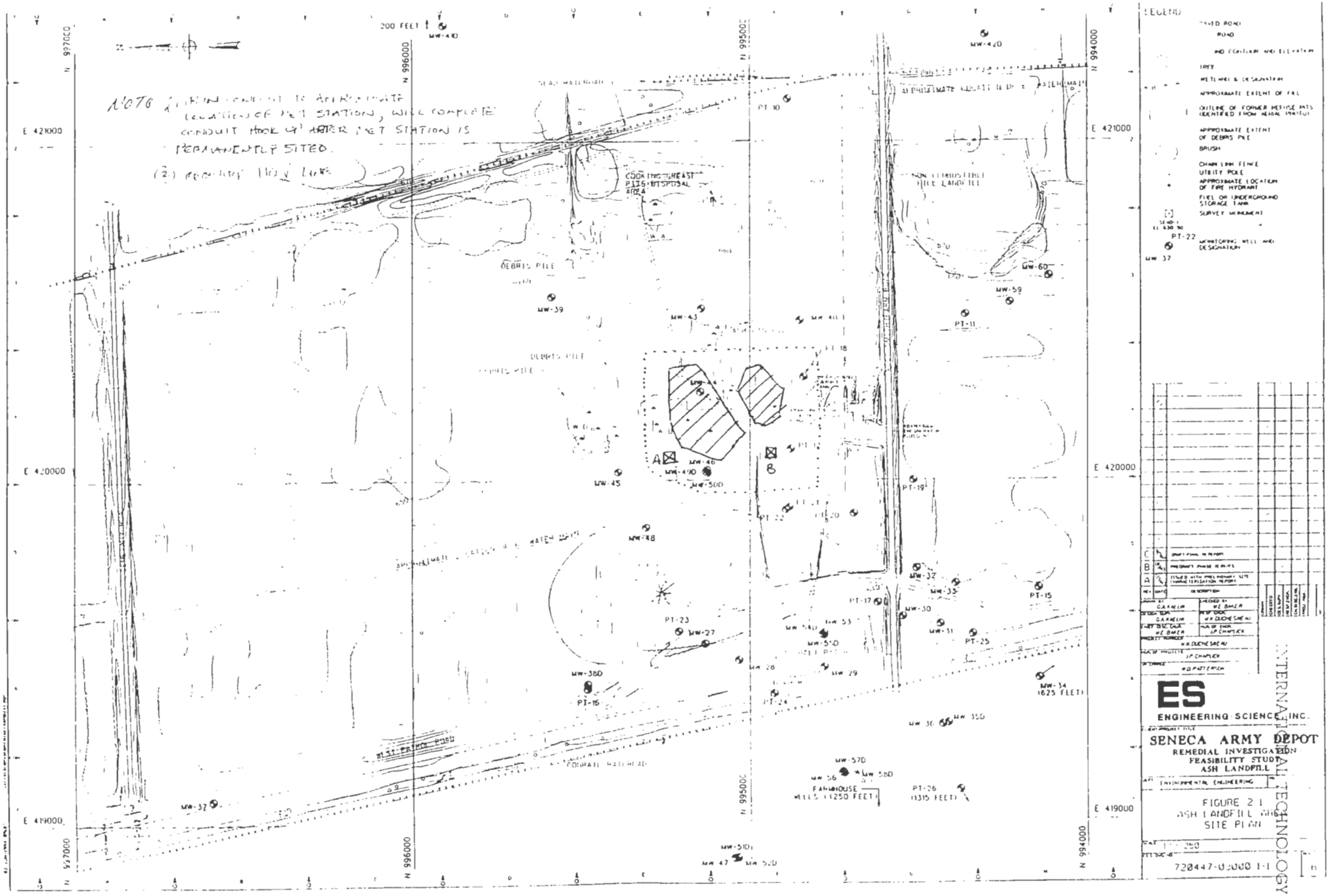

A - APPROXIMATE LOCATION OF AIR STRIPPER

B - APPROXIMATE LOCATION OF LTTD SYSTEM

.... - BOUNDARY OF EXCLUSION ZONE

- EXCAVATION AREAS

DRAFT

INTERNATIONAL TECHNOLOGY CORPORATION

September 28, 1994

Mr. Robert Scott
Permit Administrator
New York State
Department of Environmental Conservation
Region 8 Office
6274 East Avon-Lima Road
Avon, New York 14414

Project No. 519200

Request for Authorization to Construct and Operate Emission Point Sources

Dear Mr. Scott:

With this letter, IT Corporation (IT) requests your review and authorization to construct and operate two (2) separate emission point sources as part of a U.S. Army Corps of Engineers (USACE) Rapid Response remedial action at the Seneca Army Depot in Romulus, New York. IT previously discussed this request with you to determine the appropriate requirements needed to secure the authorization to emit. Attached to this letter is the information for both proposed sources that we believe necessary to meet the "substantive elements" of the NYSDEC-administered air permit program, outlined in NYSDEC Form 76-11-12.

The Seneca Army Depot Rapid Response project involves the excavation and treatment of contaminated soils from a landfill on the Seneca Army base property. Soils contaminated primarily with chlorinated hydrocarbons and polynucleated aromatic compounds will be removed and treated by a low temperature thermal desorption (LTTD) process, and ultimately backfilled after meeting predetermined clean-up criteria. The LTTD system will vent off-gas during operation and will require authorization to emit. In addition, the excavation areas will be dewatered by a collection trench designed to intercept groundwater and collect precipitation and run-off. The collected water will be routed to a collection tank and batch-treated via an air stripper prior to discharge. The air stripper constitutes the other emission point source.

The Seneca Army Depot Rapid Response project is on a fast-track to implementation and completion. The most current project schedule is as follows:

August 30, 1994- Baseline ambient monitoring and on-site meteorological station set-up and calibration;

September 26, 1994- Confirmatory soil boring and surveying activities begin

Regional Office
140 Allen's Creek Road • Suite 150 • Rochester, New York 14618 • 716-271-6430

IT Corporation is a wholly owned subsidiary of International Technology Corporation

Emission Calculations

NOTE: See attached SEDA01 emission impact calculations spreadsheet

The LTTD emissions are calculated based on a worst case estimate of potential soil material contamination for both volatile organic compounds (VOCs) and polynucleated aromatic hydrocarbons (PAHs). The VOCs and PAHs are the primary chemicals of concern for air emissions at the SEDA Ash Landfill site and are the types of chemicals that will be remediated by the LTTD system. Because the matrix of material to be remediated at the Ash Landfill site includes soil and other organic material, particulate matter may also be a concern for air emissions.

The LTTD system will be operating at a temperature of greater than 900 °F in order to adequately treat the soil material. At temperatures in this range, it is expected that the VOCs present in the soil material will be chemically destroyed and removed from the soil. This reaction in the LTTD will produce primarily hydrogen chloride, carbon dioxide and water vapor by-products, as well as any remaining trace amounts of the original VOCs still present. These compounds are expected constitute the main emission contaminants for the SEDA01 air emission point. In addition, particulate matter may be emitted.

For SEDA01, the emission rate potential have been calculated by the following equation:

$$\frac{\text{ug/kg} * \text{Tons/hr} * 2000 \text{ pounds/Ton}}{10^6 \text{ ug/g} * 2.205 \text{ pounds/kg} * 453.6 \text{ g/lbs.}} = \text{pounds/hour (lbs./hr.)}$$

where, ug/kg is soil VOC concentration and
Tons/hr. is the LTTD process throughput rate;

The LTTD will process a maximum of 20 tons material per hour. With the worst case maximum concentrations shown in the spreadsheet table, the emission rate potential for each compounds has been calculated. With the addition of the thermal oxidizer and baghouse as air pollution control devices, to control VOCs and particulate matter respectively, the emission rate calculations were adjusted to reflect the control technologies' effect. The final emission rate for each compound was calculated using the following equation:

lbs./hr. - (lbs./hr.* % control) = lbs./hr. emission rate

Emission impact calculations were also performed according to NYSDEC Air Guide-1 guidelines to determine potential long-term and short-term impacts of the emissions from SEDA01. Based on these calculations, the worst case potential air emissions from the LTTD system operating at its' maximum operating conditions will meet all applicable NYSDEC air emission requirements to emit as indicated.

To support the above calculations and assumptions, source testing of LTTD operation will be performed during the project Start-Up/Prove-Out event. The source testing is outlined in the project's Air Monitoring Plan (AMP) and will include: USEPA Compendium Method TO-14 for VOCs; BIF Method 0050 for hydrogen chloride and particulate matter; and SW-846 Method 0010/8270 for semivolatile compounds (SVOCs). Results from this testing will be reported during the project update meetings and in the final report at project completion. In addition, we are currently investigating the applicability of performing a screening model (such as TSCREEN or SCREEN2) on the proposed LTTD operations as an additional check.

October 3, 1994-	On-site activities commence with site clearing, initial excavation, and equipment set-up
October 10, 1994-	Equipment start-up/prove-out event (approximate date) and full project implementation.
January, 1995-	On-site project activities to be completed (approximate).

Based on this schedule, we will require authorization to construct and operate the two emission point sources in a timely fashion in order to remain on schedule with the USACE's schedule as listed above. IT is willing to provide any additional information required by the NYSDEC or answer any questions in order to facilitate the NYSDEC's effort.

Once again, please contact the undersigned at (716) 271-6430 if you have any questions or comments. IT wishes to thank you ahead of time and appreciates your prompt and timely response to this issue.

Respectfully Submitted,

IT CORPORATION

Jeffrey D. Korb
Technical Manager- Air

Peter W. Coutts
Project Technical Manager

JDK:PWC:jk
Attachments

cc: Mr. Kamal Gupta- Div. of Hazardous Waste Remediation, NYSDEC, Albany, NY
Mr. Andrew Winslow- U.S. Army Corps of Engineers, Omaha District
Mr. Randall Battaglia- U.S. Army, Seneca Army Depot
Mr. Douglas Wehner- IT Corporation

Seneca Army Depot
Rapid Response- Ash Landfill Remediation Project

Emission Point SEDA01

Basic Information

Operator: Department of the U.S. Army
Seneca Army Depot
Route 96
Romulus, New York 14541-5001

Operator Representative: Randall Battaglia
Environmental Coordinator
(607) 869-1532

Facility/Area: Seneca Army Depot
Ash Landfill

Start-Up Date: October 10, 1994

Source Parameters

Ground Elevation (ft.):	648
Height above Structure (ft.):	NA
Stack Height (ft.):	56
Inside Dimensions (in.):	40
Exit Temperature (°F):	1,380
Exit Velocity (ft./sec.):	90
Exit Flow Rate (ACFM):	37,000
Hours of Operation (hrs./day):	24 hours
Hours of Operation (day/yr.):	200 days
% Operation by Season:	10% Winter 0% Spring 0% Summer 90% Fall

Process Description

Emission point is the off-gas vent for the low temperature thermal desorption (LTTD) machine and will release the off-gas in a continuous stream. Soil will enter the LTTD via a conveyor after separated from large-scale debris and will be treated at greater than 900°F operating temperature for a duration of 8-12 minutes. The treated soil will be sampled and staged after treatment.

Emission Control Device(s)

Thermal Oxidizer (operating temperature 1400 °F)- Code 10
Baghouse- Code 02

Contaminant List

Trichloroethene	79-01-6
1,2-Dichloroethene	156-59-2
Vinyl chloride	75-01-4
Toluene	108-88-3
Xylenes	1330-20-7
Hydrogen chloride	7647-01-0
Particulates	NY75-00-0

Seneca Army Depot
LTTD TREATMENT EMISSIONS
NO CONTROL

COMPOUNDS	CAS No.	AGC (ug/m3)	SGC (ug/m3)	Pot. CONC (ug/kg)	Pot. Emission (lb./hr.)	% Control	Actual Emissions (lbs./hr.)	Actual Emissions (lbs./yr.)	Ca (ug/m3)	Cp (ug/m3)	Cst (ug/m3)	PASS AGC	PASS Pot. AGC	PASS SGC	He	He(2.16)
TRICHLOROETHENE (TCE)	79-01-6	0.45	33000	540000	22.4883342	0.00	2.25E+01	1.97E+05	15.88518	15.86893	6665	N	N	Y	56	5971.54
1,2-DICHLOROETHENE (DCE)	156-59-2	1900	190000	79000	3.28996	0.00	3.29E+00	2.88E+04	2.32394	2.32157	975	Y	Y	Y	56	5971.54
VINYL CHLORIDE	75-01-4	0.02	1300	920	0.03831346	0.00	3.83E-02	3.35E+02	0.02706	0.02704	11.36	N	N	Y	56	5971.54
TOLUENE	108-88-3	2000	89000	5700	0.23737686	0.00	2.37E-01	2.08E+03	0.16768	0.16751	70.35	Y	Y	Y	56	5971.54
XYLENES	1330-20-7	300	100000	17000	0.70796608	0.00	7.07E-01	6.20E+03	0.50009	0.49958	209.82	Y	Y	Y	56	5971.54
HYDROGEN CHLORIDE	7647-01-0	167	1667	100000	4.16450633	0.00	4.16E+00	3.64E+04	2.94170	2.93869	1234.25	Y	Y	Y	56	5971.54
PARTICULATES	NY75-00-0	50	150	100000	4.16450633	0.00	4.16038	3.64E+04	2.94170	2.93869	1234.25	Y	Y	N	56	5971.54

Seneca Army Depot
LTTD TREATMENT EMISSIONS
WITH CONTROL

COMPOUNDS	CAS No.	AGC (ug/m3)	SGC (ug/m3)	Pot. CONC (ug/kg)	Pot. Emission (lb./hr.)	% Control	Actual Emissions (lbs./hr.)	Actual Emissions (lbs./yr.)	Ca (ug/m3)	Cp (ug/m3)	Cst (ug/m3)	PASS AGC	PASS Pot. AGC	PASS SGC	He	He(2.16)
TRICHLOROETHENE (TCE)	79-01-6	0.45	33000	540000	22.4883342	0.99	2.25E-01	1.97E+03	0.15901	0.15885	67	Y	Y	Y	56	5971.54
1,2-DICHLOROETHENE (DCE)	156-59-2	1900	190000	79000	3.28996	0.99	3.29E-02	2.88E+02	0.02326	0.02324	10	Y	Y	Y	56	5971.54
VINYL CHLORIDE	75-01-4	0.02	1300	920	0.03831346	0.99	3.83E-04	3.36E+00	0.00027	0.00027	0.11	Y	Y	Y	56	5971.54
TOLUENE	108-88-3	2000	89000	5700	0.23737686	0.99	2.37E-03	2.08E+01	0.00168	0.00168	0.70	Y	Y	Y	56	5971.54
XYLENES	1330-20-7	300	100000	17000	0.70796608	0.99	7.08E-03	6.20E+01	0.00501	0.00500	2.10	Y	Y	Y	56	5971.54
HYDROGEN CHLORIDE	7647-01-0	167	1667	100000	4.16450633	0.99	4.16E-02	3.65E+02	0.02945	0.02942	12.35	Y	Y	Y	56	5971.54
PARTICULATES	NY75-00-0	50	150	100000	4.16450633	0.90	0.41645	3.65E+03	0.29446	0.29416	123.55	Y	Y	Y	56	5971.54

AGC= Ambient Guideline Concentration
SGC= Short-Term Guideline Concentration
Ca= Annual Impact concentration
Cp= Potential Annual Impact concentration
Cst= Short-Term Impact concentration
He= Effective stack height

September 28, 1994

Mr. Robert Scott
Permit Administrator
New York State
Department of Environmental Conservation
Region 8 Office
6274 East Avon-Lima Road
Avon, New York 14414

Project No. 519200

Request for Authorization to Construct and Operate Emission Point Sources

Dear Mr. Scott:

With this letter, IT Corporation (IT) requests your review and authorization to construct and operate two (2) separate emission point sources as part of a U.S. Army Corps of Engineers (USACE) Rapid Response remedial action at the Seneca Army Depot in Romulus, New York. IT previously discussed this request with you to determine the appropriate requirements needed to secure the authorization to emit. Attached to this letter is the information for both proposed sources that we believe necessary to meet the "substantive elements" of the NYSDEC-administered air permit program, outlined in NYSDEC Form 76-11-12.

The Seneca Army Depot Rapid Response project involves the excavation and treatment of contaminated soils from a landfill on the Seneca Army base property. Soils contaminated primarily with chlorinated hydrocarbons and polynucleated aromatic compounds will be removed and treated by a low temperature thermal desorption (LTTD) process, and ultimately backfilled after meeting predetermined clean-up criteria. The LTTD system will vent off-gas during operation and will require authorization to emit. In addition, the excavation areas will be dewatered by a collection trench designed to intercept groundwater and collect precipitation and run-off. The collected water will be routed to a collection tank and batch-treated via an air stripper prior to discharge. The air stripper constitutes the other emission point source.

The Seneca Army Depot Rapid Response project is on a fast-track to implementation and completion. The most current project schedule is as follows:

August 30, 1994- Baseline ambient monitoring and on-site meteorological station set-up and calibration;

September 26, 1994- Confirmatory soil boring and surveying activities begin

October 3, 1994-	On-site activities commence with site clearing, initial excavation, and equipment set-up
October 10, 1994-	Equipment start-up/prove-out event (approximate date) and full project implementation.
January, 1995-	On-site project activities to be completed (approximate).

Based on this schedule, we will require authorization to construct and operate the two emission point sources in a timely fashion in order to remain on schedule with the USACE's schedule as listed above. IT is willing to provide any additional information required by the NYSDEC or answer any questions in order to facilitate the NYSDEC's effort.

Once again, please contact the undersigned at (716) 271-6430 if you have any questions or comments. IT wishes to thank you ahead of time and appreciates your prompt and timely response to this issue.

Respectfully Submitted,

IT CORPORATION

Jeffrey D. Korb
Technical Manager- Air

Peter W. Coutts
Project Technical Manager

JDK:PWC:jk
Attachments

cc: Mr. Kamal Gupta- Div. of Hazardous Waste Remediation, NYSDEC, Albany, NY
Mr. Andrew Winslow- U.S. Army Corps of Engineers, Omaha District
Mr. Randall Battaglia- U.S. Army, Seneca Army Depot
Mr. Douglas Wehner- IT Corporation

Seneca Army Depot
Rapid Response- Ash Landfill Remediation Project

Emission Point SEDA01

Basic Information

Operator: Department of the U.S. Army
Seneca Army Depot
Route 96
Romulus, New York 14541-5001

Operator Representative: Randall Battaglia
Environmental Coordinator
(607) 869-1532

Facility/Area: Seneca Army Depot
Ash Landfill

Start-Up Date: October 10, 1994

Source Parameters

Ground Elevation (ft.):	648
Height above Structure (ft.):	NA
Stack Height (ft.):	56
Inside Dimensions (in.):	40
Exit Temperature (°F):	1,380
Exit Velocity (ft./sec.):	90
Exit Flow Rate (ACFM):	37,000
Hours of Operation (hrs./day):	24 hours
Hours of Operation (day/yr.):	200 days
% Operation by Season:	10% Winter 0% Spring 0% Summer 90% Fall

Process Description

Emission point is the off-gas vent for the low temperature thermal desorption (LTTD) machine and will release the off-gas in a continuous stream. Soil will enter the LTTD via a conveyor after separated from large-scale debris and will be treated at greater than 900°F operating temperature for a duration of 8-12 minutes. The treated soil will be sampled and staged after treatment.

Emission Control Device(s)

Thermal Oxidizer (operating temperature 1400 °F)- Code 10
Baghouse- Code 02

Contaminant List

Trichloroethene	79-01-6
1,2-Dichloroethene	156-59-2
Vinyl chloride	75-01-4
Toluene	108-88-3
Xylenes	1330-20-7
Hydrogen chloride	7647-01-0
Particulates	NY75-00-0

Emission Calculations

NOTE: See attached SEDA01 emission impact calculations spreadsheet

The LTTD emissions are calculated based on a worst case estimate of potential soil material contamination for both volatile organic compounds (VOCs) and polynucleated aromatic hydrocarbons (PAHs). The VOCs and PAHs are the primary chemicals of concern for air emissions at the SEDA Ash Landfill site and are the types of chemicals that will be remediated by the LTTD system. Because the matrix of material to be remediated at the Ash Landfill site includes soil and other organic material, particulate matter may also be a concern for air emissions.

The LTTD system will be operating at a temperature of greater than 900 °F in order to adequately treat the soil material. At temperatures in this range, it is expected that the VOCs present in the soil material will be chemically destroyed and removed from the soil. This reaction in the LTTD will produce primarily hydrogen chloride, carbon dioxide and water vapor by-products, as well as any remaining trace amounts of the original VOCs still present. These compounds are expected constitute the main emission contaminants for the SEDA01 air emission point. In addition, particulate matter may be emitted.

For SEDA01, the emission rate potential have been calculated by the following equation:

$$\frac{\text{ug/kg} * \text{Tons/hr} * 2000 \text{ pounds/Ton}}{10^6 \text{ ug/g} * 2.205 \text{ pounds/kg} * 453.6 \text{ g/lbs.}} = \text{pounds/hour (lbs./hr.)}$$

where, ug/kg is soil VOC concentration and
Tons/hr. is the LTTD process throughput rate;

The LTTD will process a maximum of 20 tons material per hour. With the worst case maximum concentrations shown in the spreadsheet table, the emission rate potential for each compounds has been calculated. With the addition of the thermal oxidizer and baghouse as air pollution control devices, to control VOCs and particulate matter respectively, the emission rate calculations were adjusted to reflect the control technologies' effect. The final emission rate for each compound was calculated using the following equation:

lbs./hr. - (lbs./hr.* % control) = lbs./hr. emission rate

Emission impact calculations were also performed according to NYSDEC Air Guide-1 guidelines to determine potential long-term and short-term impacts of the emissions from SEDA01. Based on these calculations, the worst case potential air emissions from the LTTD system operating at its' maximum operating conditions will meet all applicable NYSDEC air emission requirements to emit as indicated.

To support the above calculations and assumptions, source testing of LTTD operation will be performed during the project Start-Up/Prove-Out event. The source testing is outlined in the project's Air Monitoring Plan (AMP) and will include: USEPA Compendium Method TO-14 for VOCs; BIF Method 0050 for hydrogen chloride and particulate matter; and SW-846 Method 0010/8270 for semivolatile compounds (SVOCs). Results from this testing will be reported during the project update meetings and in the final report at project completion. In addition, we are currently investigating the applicability of performing a screening model (such as TSCREEN or SCREEN2) on the proposed LTTD operations as an additional check.

Seneca Army Depot
LTTD TREATMENT EMISSIONS
NO CONTROL

COMPOUNDS	CAS No.	AGC (ug/m3)	SGC (ug/m3)	Pot. CONC (ug/kg)	Pot. Emission (lb./hr.)	% Control	Actual Emissions (lbs./hr.)	Actual Emissions (lbs./yr.)	Ca (ug/m3)	Cp (ug/m3)	Cst (ug/m3)	PASS AGC	PASS Pot. AGC	PASS SGC	He	He(2.16)
TRICHLOROETHENE (TCE)	79-01-6	0.45	33000	540000	22.4883342	0.00	2.25E+01	1.97E+05	15.88518	15.86893	6665	N	N	Y	56	5971.54
1,2-DICHLOROETHENE (DCE)	156-59-2	1900	190000	79000	3.28996	0.00	3.29E+00	2.88E+04	2.32394	2.32157	975	Y	Y	Y	56	5971.54
VINYL CHLORIDE	75-01-4	0.02	1300	920	0.03831346	0.00	3.83E-02	3.35E+02	0.02706	0.02704	11.36	N	N	Y	56	5971.54
TOLUENE	108-88-3	2000	89000	5700	0.23737686	0.00	2.37E-01	2.08E+03	0.16768	0.16751	70.35	Y	Y	Y	56	5971.54
XYLENES	1330-20-7	300	100000	17000	0.70796608	0.00	7.07E-01	6.20E+03	0.50009	0.49958	209.82	Y	Y	Y	56	5971.54
HYDROGEN CHLORIDE	7647-01-0	167	1667	100000	4.16450633	0.00	4.16E+00	3.64E+04	2.94170	2.93869	1234.25	Y	Y	Y	56	5971.54
PARTICULATES	NY75-00-0	—	150	100000	4.16450633	0.00	4.16038	3.64E+04	2.94170	2.93869	1234.25	Y	Y	N	56	5971.54

Seneca Army Depot
LTTD TREATMENT EMISSIONS
WITH CONTROL

COMPOUNDS	CAS No.	AGC (ug/m3)	SGC (ug/m3)	Pot. CONC (ug/kg)	Pot. Emission (lb./hr.)	% Control	Actual Emissions (lbs./hr.)	Actual Emissions (lbs./yr.)	Ca (ug/m3)	Cp (ug/m3)	Cst (ug/m3)	PASS AGC	PASS Pot. AGC	PASS SGC	He	He(2.16)
TRICHLOROETHENE (TCE)	79-01-6	0.45	33000	540000	22.4883342	0.99	2.25E-01	1.97E+03	0.15901	0.15885	67	Y	Y	Y	56	5971.54
1,2-DICHLOROETHENE (DCE)	156-59-2	1900	190000	79000	3.28996	0.99	3.29E-02	2.88E+02	0.02326	0.02324	10	Y	Y	Y	56	5971.54
VINYL CHLORIDE	75-01-4	0.02	1300	920	0.03831346	0.99	3.83E-04	3.36E+00	0.00027	0.00027	0.11	Y	Y	Y	56	5971.54
TOLUENE	108-88-3	2000	89000	5700	0.23737686	0.99	2.37E-03	2.08E+01	0.00168	0.00168	0.70	Y	Y	Y	56	5971.54
XYLENES	1330-20-7	300	100000	17000	0.70796608	0.99	7.08E-03	6.20E+01	0.00501	0.00500	2.10	Y	Y	Y	56	5971.54
HYDROGEN CHLORIDE	7647-01-0	167	1667	100000	4.16450633	0.99	4.16E-02	3.65E+02	0.02945	0.02942	12.35	Y	Y	Y	56	5971.54
PARTICULATES	NY75-00-0	—	150	100000	4.16450633	0.90	0.41645	3.65E+03	0.29446	0.29416	123.55	Y	Y	Y	56	5971.54

AGC= Ambient Guideline Concentration
SGC= Short-Term Guideline Concentration
Ca= Annual Impact concentration
Cp= Potential Annual Impact concentration
Cst= Short-Term Impact concentration
He= Effective stack height

DRAWN BY	CHECKED BY	DRAWING NUMBER
DJB 8/17/94	APPROVED BY	5190,0-A1

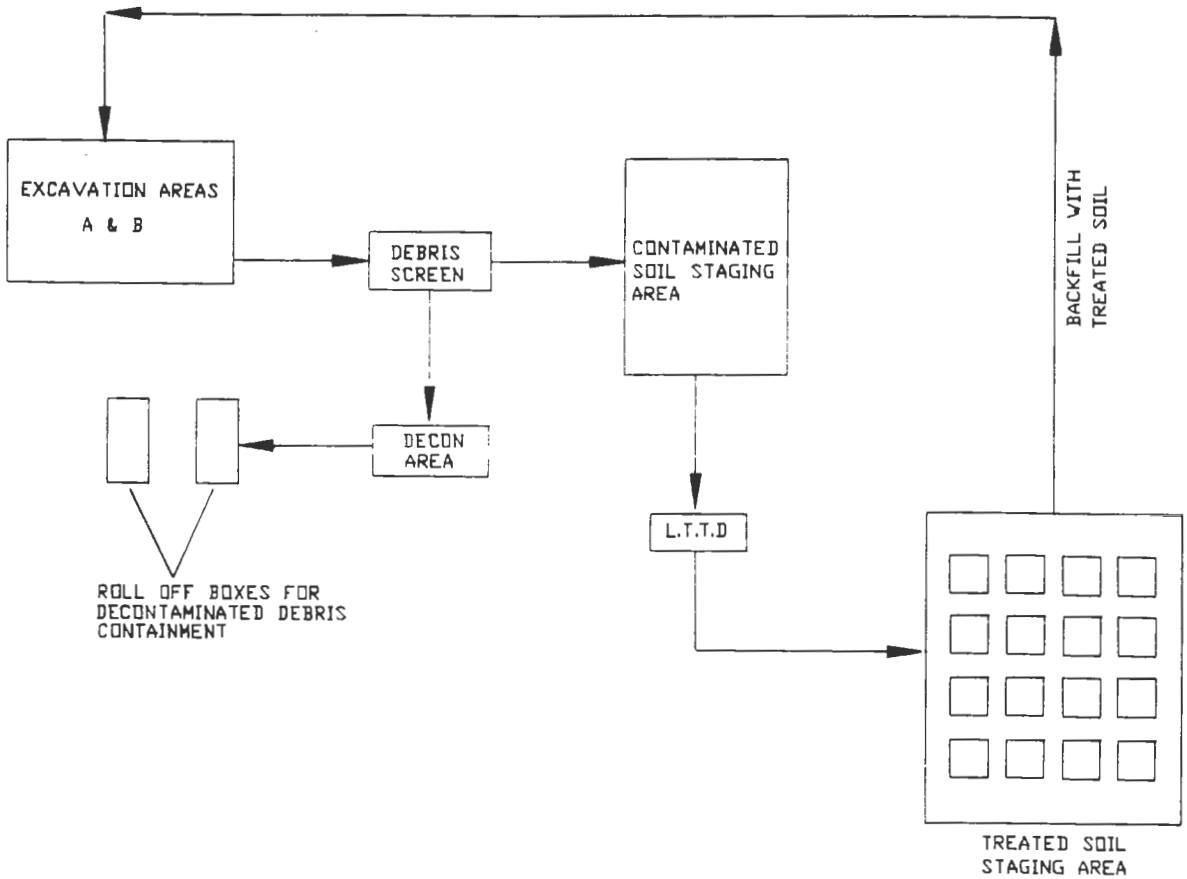

FIGURE
PROCESS SCHEMATIC - SOIL

PREPARED FOR

SENECA ARMY DEPOT
ROMULUS, NEW YORK

INTERNATIONAL TECHNOLOGY CORPORATION

132298

© 1984 IT CORPORATION
ALL COPYRIGHTS RESERVED

"Do Not Scale This Drawing"

Seneca Army Depot
Rapid Response- Ash Landfill Remediation Project

Emission Point SEDA02

Basic Information

Operator: Department of the U.S. Army
Seneca Army Depot
Route 96
Romulus, New York 14541-5001

Operator Representative: Randall Battaglia
Environmental Coordinator
(607) 869-1532

Facility/Area: Seneca Army Depot
Ash Landfill

Start-Up Date: Ocotber 3, 1994

Source Parameters

Ground Elevation (ft.):	647
Height above Structure (ft.):	NA
Stack Height (ft.):	30
Inside Dimensions (in.):	104
Exit Temperature (°F):	60/ambient
Exit Velocity (ft./sec.):	0.00015
Exit Flow Rate (ACFM):	300
Hours of Operation (hrs./day):	24 hours
Hours of Operation (day/yr.):	200 days
% Operation by Season:	10% Winter 0% Spring 0% Summer 90% Fall

Process Description

Emission point is the off-gas vent for the water treatment air stripper. The air stripper system will release the off-gas created by the aeration of water in a sieved filter bed and will occur in a continuous stream while in operation. The air stripper will be operated as a batch operation, with batch treatment being performed approximately for every 40,000 gallons of water collected. Water will enter the stripper bed and will be treated at ambient/operating temperature. The treated water will be stored after treatment in surge/storage tanks prior to discharge.

Emission Control Device(s)

None

Contaminant List

Trichloroethene	79-01-6
1,2-Dichloroethene	156-59-2
Vinyl chloride	75-01-4
Chloroform	67-66-3
1,1-Dichloroethene	75-35-4
1,1-Dichloroethane	75-34-3
1,1,1-Trichloroethane	71-55-6
Tetrachloroethene	127-18-4
Benzene	71-43-2
Toluene	108-88-3

Ethylbenzene	100-41-4
Xylenes	1330-20-7
Naphthalene	91-20-3
Pentachlorophenol	87-86-5
Phenol	108-95-2
4-Methylphenol (p-Cresol)	106-44-5
2-Methylnaphthalene	91-57-6
Di-ethyl phthalate	84-66-2
Di-n-butyl phthalate	87-74-2
Particulates	NY75-00-0

Emission Calculations

NOTE: See Attached SEDA02 emission calculations spreadsheet

The air stripper emission calculations are based on worst and realistic case estimates of potential water concentrations from the groundwater and collected precipitation and run-off. For this effort, the guidance found in the NYSDEC Air Guide-29, "Air Stripper and Soil Vapor Extraction Control Strategy," dated May 1, 1991, was used to determine appropriate emission rate estimates and impact analyses.

The air stripper system to be used for this project will be a horizontal sieved bed array with a thirty (30) foot emission stack. The system will also include surge/storage tanks both prior to and after the air stripper equipment. Water collected in a collection trench will be piped to the first pair of surge/storage tanks (working volume of 40,000 gallons) where it will be stored until they are near capacity. Water will be sent from the tanks on a batch basis, treated, and flow into the other surge/storage tank pair, where it will be stored pending the receipt of analytical results on the effluent. Acceptable results will allow discharge to the existing drainage swale. Air emissions from this system are expected to be primarily VOCs, with trace amounts of PAHs and particulate compounds. Emission rates and impacts are indicative of larger than expected emission rate potentials to provide a large buffer for acceptable impacts.

For SEDA02, the emission rate estimates have been generally calculated by the following equation:

ppb VOC in water * MW/24.45 * m^3/35.13 ft^3* 7.5 ft^3/gallon *
gallons/min. flow * min./hr. * g/10^6 ug * lbs./ 453.6 g = Emission rate (lbs./hr.)

The air stripper emissions calculated from this equation must not exceed one-half of each respective AGC value and the emission rates must be below the State guidance emission rate of 0.022 lbs./hr. for a thirty (30) foot stack in order to be acceptable. Based on this criteria, the emission rates expected during operation of this air stripper are not expected to exceed one-half AGCs or the emission rate level for any contaminant. At this time, the air stripper will meet the required emission rate levels; we believe that additional pollution control equipment is not required.

To support the above calculations and assumptions, additional mass balance calculations based on actual air stripper operational parameters in the field and the results of analytical testing on the influent and effluent water will be performed. Results from this analysis will be reported during project update meetings and in the final report at project completion.

Seneca Army Depot
Dewater Treatment/Air Stripper
Air Emission Estimates and Impact Assessment with six (6) tray horizontal bed stripper

Parameters:	
Water Flow Rate	50 gpm
Air Flow Rate	300 ACFM
Water Temperature	55
Air to Water Ratio	45:1

COMPOUNDS	CAS No.	AGC (ug/m3)	SGC (ug/m3)	HALF AGC	ppb H2O	Emission (lb./hr.)	% Removal	Actual Emissions (lbs./hr.)	Actual Emissions (lbs./yr.)	Ca (ug/m3)	Cp (ug/m3)	Cst (ug/m3)	PASS AGC	PASS ER	He	He(2.16)
TRICHLOROETHENE (TCE)	79-01-6	0.45	33000	0.23	37000	5.00E-03	0.999979	1.18E-03	10.38	0.00323	0.00322	1.35	Y	Y	30	1550.89
1,2-DICHLOROETHENE (DCE)	156-59-2	1900	190000	950	74000	7.38E-03	0.999955	8.74E-04	7.66	0.00238	0.00238	1.00	Y	Y	30	1550.89
VINYL CHLORIDE	75-01-4	0.02	1300	0.01	230000	1.48E-02	1.000000	5.64E-04	4.94	0.00153	0.00153	0.64	Y	Y	30	1550.89
CHLOROFORM	67-66-3	23	980	12	210	1.99E-05	0.999314	8.31E-04	7.28	0.00226	0.00226	0.95	Y	Y	30	1550.89
1,1-DICHLOROETHENE	75-35-4	0.0200	2000	0.0100	170	1.86E-05	1.000000	9.57E-04	8.39	0.00261	0.00260	1.09	Y	Y	30	1550.89
1,1-DICHLOROETHANE	75-34-3	500	190000	250	160	6.43E-05	0.999862	3.52E-03	30.85	0.00959	0.00958	4.02	Y	Y	30	1550.89
1,1,1-TRICHLOROETHANE	71-55-6	1000	450000	500	72	1.50E-05	0.999994	1.82E-03	15.98	0.00496	0.00496	2.08	Y	Y	30	1550.89
TETRACHLOROETHENE	127-18-4	0.08	81000	0.04	2	4.16E-07	0.999992	1.82E-03	15.98	0.00496	0.00496	2.08	Y	Y	30	1550.89
BENZENE	71-43-2	0.12	30.00	0.06	170	3.12E-05	0.998796	1.61E-03	14.08	0.00438	0.00437	1.84	Y	Y	30	1550.89
TOLUENE	108-88-3	2000	89000	1000	880	2.29E-04	0.999744	2.28E-03	19.93	0.00619	0.00619	2.60	Y	Y	30	1550.89
ETHYLBENZENE	100-41-4	1000	100000	500	180	5.12E-05	0.999879	2.49E-03	21.83	0.00678	0.00678	2.85	Y	Y	30	1550.89
XYLENES (Total)	1330-20-7	300	100000	150	540	7.12E-05	0.996819	1.16E-03	10.12	0.00315	0.00314	1.32	Y	Y	30	1550.89
NAPHTHALENE	91-20-3	120	12000	60	66	1.55E-05	0.128110	2.06E-03	18.03	0.00560	0.00560	2.35	Y	Y	30	1550.89
PENTACHLOROPHENOL	87-86-5	1.20	120	0.60	54	1.27E-05	0.003066	2.06E-03	18.03	0.00560	0.00560	2.35	Y	Y	30	1550.89
PHENOL	108-95-2	9.60	4500	4.80	5	1.43E-06	0.000344	2.51E-03	21.99	0.00683	0.00683	2.87	Y	Y	30	1550.89
4-METHYLPHENOL (p-Cresol)	106-44-5	24	2400	12	4	4.45E-07	0.000311	9.74E-04	8.53	0.00265	0.00265	1.11	Y	Y	30	1550.89
2-METHYLNAPHTHALENE	91-57-6	1	10	0.50	12	1.75E-06	0.174285	1.28E-03	11.22	0.00349	0.00348	1.46	Y	Y	30	1550.89
DIETHYL PHTHALATE	84-66-2	12	1200	6.00	1	2.28E-07	0.120120	2.00E-03	17.53	0.00545	0.00544	2.29	Y	Y	30	1550.89
DI-n-BUTYL PHTHALATE	87-74-2	120	1190	60	1	2.86E-07	0.120120	2.51E-03	21.96	0.00682	0.00682	2.86	Y	Y	30	1550.89

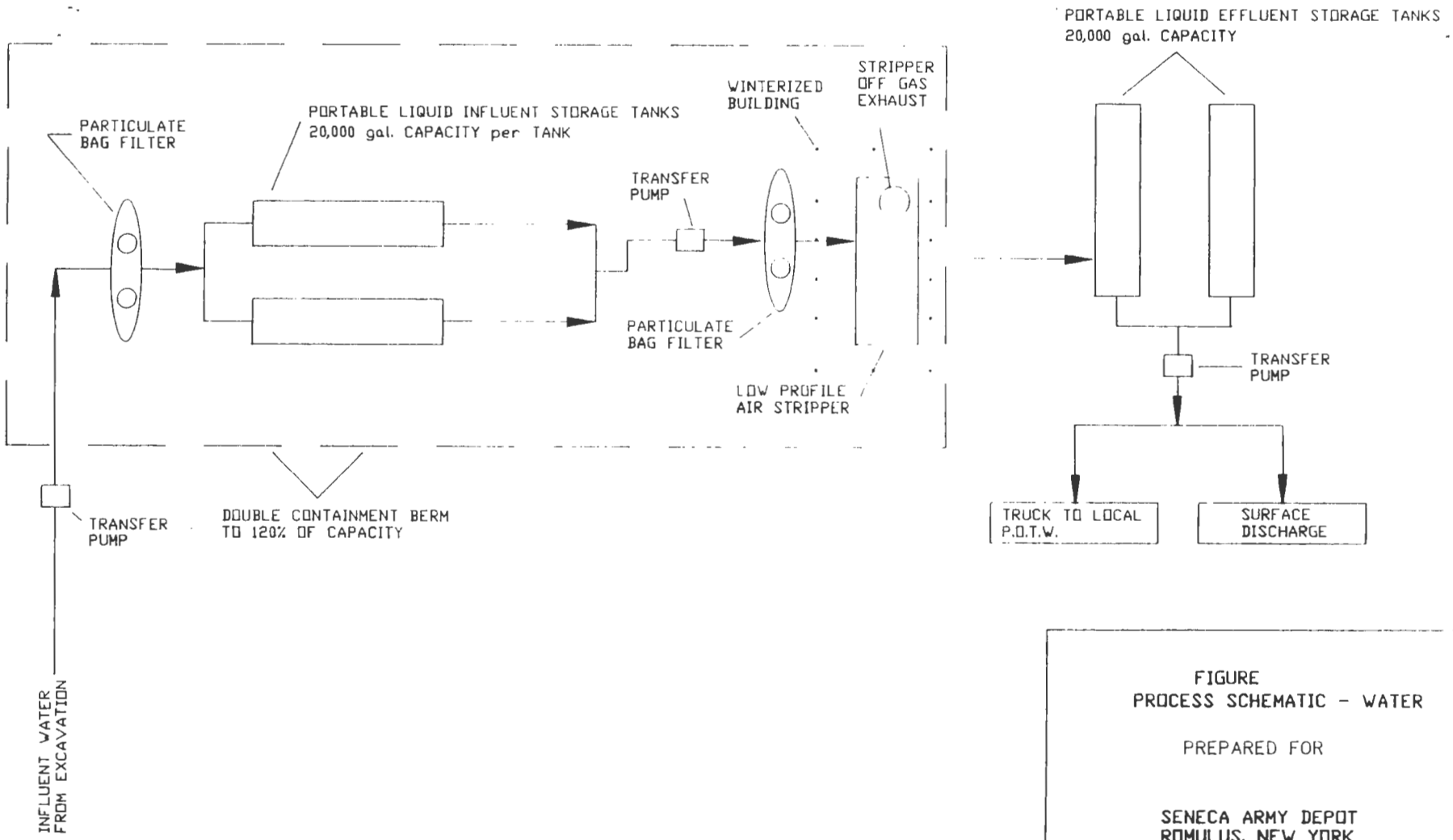

FIGURE
PROCESS SCHEMATIC - WATER

PREPARED FOR

SENECA ARMY DEPOT
ROMULUS, NEW YORK

INTERNATIONAL TECHNOLOGY CORPORATION

DRAWN BY	DJB	CHECKED BY		DRAWING NUMBER	519070-A2
	8/18/94	APPROVED BY			

132298

© 1984 IT CORPORATION
ALL COPYRIGHTS RESERVED
"Do Not Scale This Drawing"

INTERNATIONAL TECHNOLOGY CORPORATION

October 16, 1994

Mr. Robert Scott
Permit Administrator
New York State
Department of Environmental Conservation
Region 8 Office
6274 East Avon-Lima Road
Avon, New York 14414

Project No. 519200

Mr. Kamal Gupta
Bureau of Eastern Remedial Action
Division of Hazardous Waste Remediation
New York State Department of Environmental Consveration
50 Wolf Road
Albany, New York 12233

Addendum to Request for Authorization to Construct and Operate Emission Point Sources

Dear Mr. Scott:

IT Corporation (IT), on behalf of the U.S. Army Corps of Engineers (USACE), Omaha District and the Seneca Army Depot Activity (SEDA), previously submitted on September 28, 1994 a request for authorization to construct and operate two (2) separate emission point sources as part of a USACE Rapid Response remedial action at the Seneca Army Depot in Romulus, New York. Discussions with Mr. Scott and Mr. Gupta have led IT to forward this addendum to our original documentation. As requested, IT has agreed to utilize vapor-phase carbon control on the air stream from the air stripper system in order to further manage and control volatile organic compound (VOC) emissions resulting from project dewatering operations. Emissions calculations demonstrate that the use of the vapor-phase carbon for this project will effectively reduce the stripper offgas emissions to nondetectable concentrations.

The attached information contains the basic carbon system specifications and operating parameters, and includes modeling data to demonstrate expected emission rates resulting from the units operation during this project. If additional information is required, we will be happy to provide it as needed. Once again, please contact the undersigned at (716) 271-6430 if you have any questions or comments. IT wishes to thank you ahead of time and appreciates your prompt and timely response to this issue.

Regional Office
140 Allen's Creek Road • Suite 150 • Rochester, New York 14618 • 716-271-6430

IT Corporation is a wholly owned subsidiary of International Technology Corporation

Respectfully Submitted,

IT CORPORATION

Jeffrey D. Korb
Technical Manager- Air

Peter W. Coutts
Project Technical Manager

JDK:PWC:jk
Attachments

cc: Mr. Andrew Winslow- U.S. Army Corps of Engineers, Omaha District
Mr. Randall Battaglia- U.S. Army, Seneca Army Depot
Mr. Douglas Wehner- IT Corporation

CARBONAIR
Water
Treatment

STAT Series
Sieve Tray Aeration Technology

Carbonair's exclusive STAT series represents the best choice for low profile air strippers with design simplicity, flexibility and high performance.

In Carbonair's STAT units, the water and air are contacted in step-wise fashion on multiple trays. The water enters at the top and flows across each tray. The air passes upwards through openings in the trays, then bubbles through the water to form "a surface of foam" which provides extreme turbulence and excellent volatilization. Since the water in Carbonair's STAT units flows horizontally across each tray, the traveling path length of water and the required removal efficiency can be achieved by increasing both the number and length of the trays. Therefore, the STAT units provide much lower tower height than the conventional packed towers.

Another advantage of Carbonair's STAT units is that air and blower power consumption are effectively utilized since a single air stream passes through every tray before exiting the tower. As a result of minimal air flows, the organic contaminants are concentrated and effectively removed by vapor phase carbon.

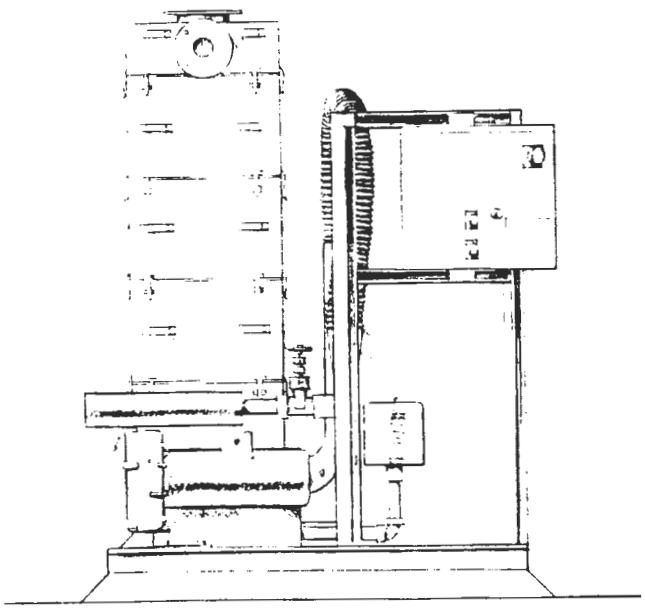

Low tower height yields numerous other advantages: rapid installation, easy winterization, inconspicuous appearance, easy shipping and easy maintenance. The STAT unit also reduces the potential for fouling since it contains no packing media and provides an extreme turbulent condition.

Carbonair's STAT units are available with a number of plate configurations, blowers and controls, and can achieve removal efficiency up to 99.99%.

OPTIONS

Explosion-proof controls.

Discharge pump.

Well control.

Off-gas carbon.

Humidity control.

Carbon polish.

Winterized enclosure.

FEATURES

The low air flow and minimal tower height make the unit ideal for off-gas treatment.

The compact unit can be installed in a few hours.

Controls include motor starter, level switch, air pressure gauge and air pressure switch.

Panel comes with blower, manual-off-automatic switch and alarm lights.

Computer modeling customizes the system for optimum air flow, number and size of trays.

SPECIFICATIONS

Listed on other side.

CARBONAIR
ENVIRONMENTAL SERVICES

8640 Monticello Lane
Maple Grove, MN 55369-4547
612-425-2992 800-526-4999
Fax 612-425-6882

STAT SPECIFICATIONS

STAT MODEL	TRAY LENGTH (ft.)	TRAY WIDTH (ft.)	HEIGHT PER STAGE (in.)	SUMP HEIGHT	DEMISTER HEIGHT (in.)	MAXIMUM HEIGHT (in.)*	LIQUID FLOW (gpm)	MINIMUM AIR FLOW (cfm)	MAXIMUM AIR FLOW (cfm)
15	2	0.75	10	22	9.5	93	0.5-15	60	80
30	3	1	10	24	10.5	96	1-40	100	150
80	4	2	10	24	11.5	97	5-100	300	350
180	6	3	10	24	12.0	98	10-200	650	700

*For 6-Tray unit

BENZENE REMOVAL EFFICIENCY AT 55° F

Predicted by Computer Modeling
(Graphs show removal efficiency at minimum air flow rates.
At maximum air flow rates, efficiency is slightly improved.)

STAT 15
(60 CFM)

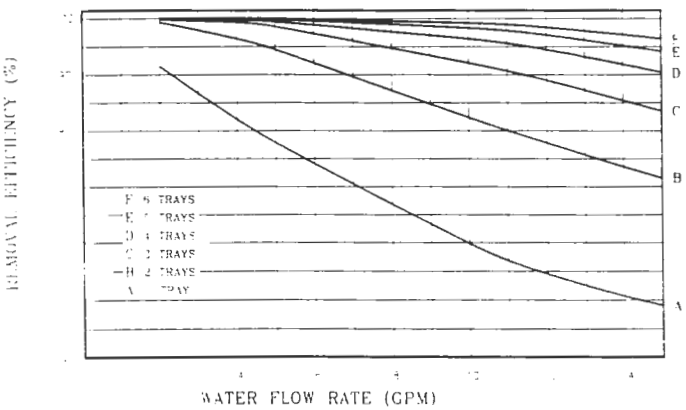

STAT 30
(100 CFM)

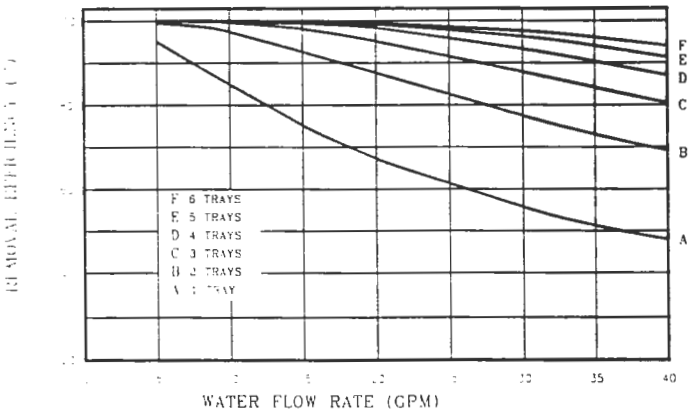

STAT 80
(300 CFM)

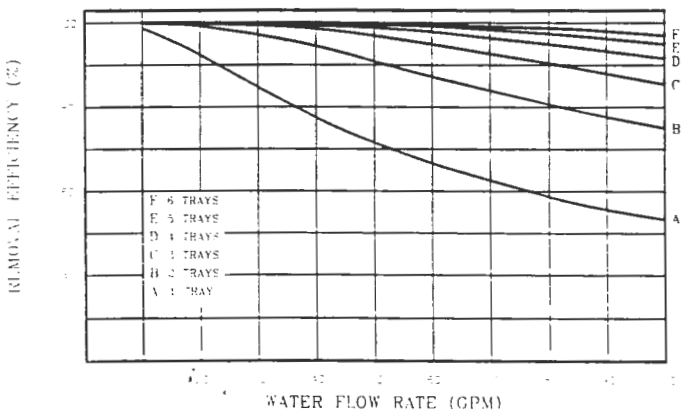

STAT 180
(650 CFM)

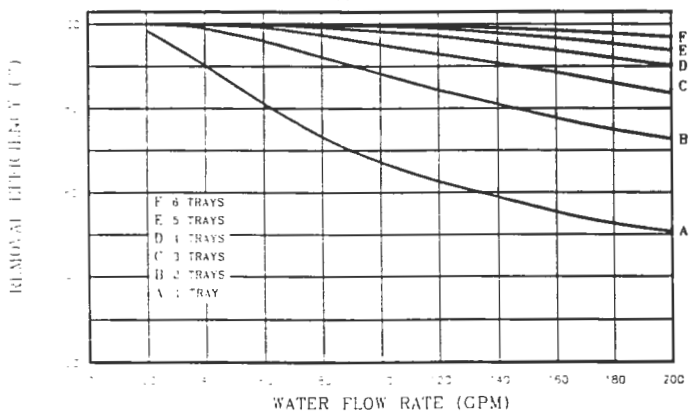

PRINTED ON RECYCLED PAPER

Product Data Sheet EE198A-94
© 1994 by Carbonair

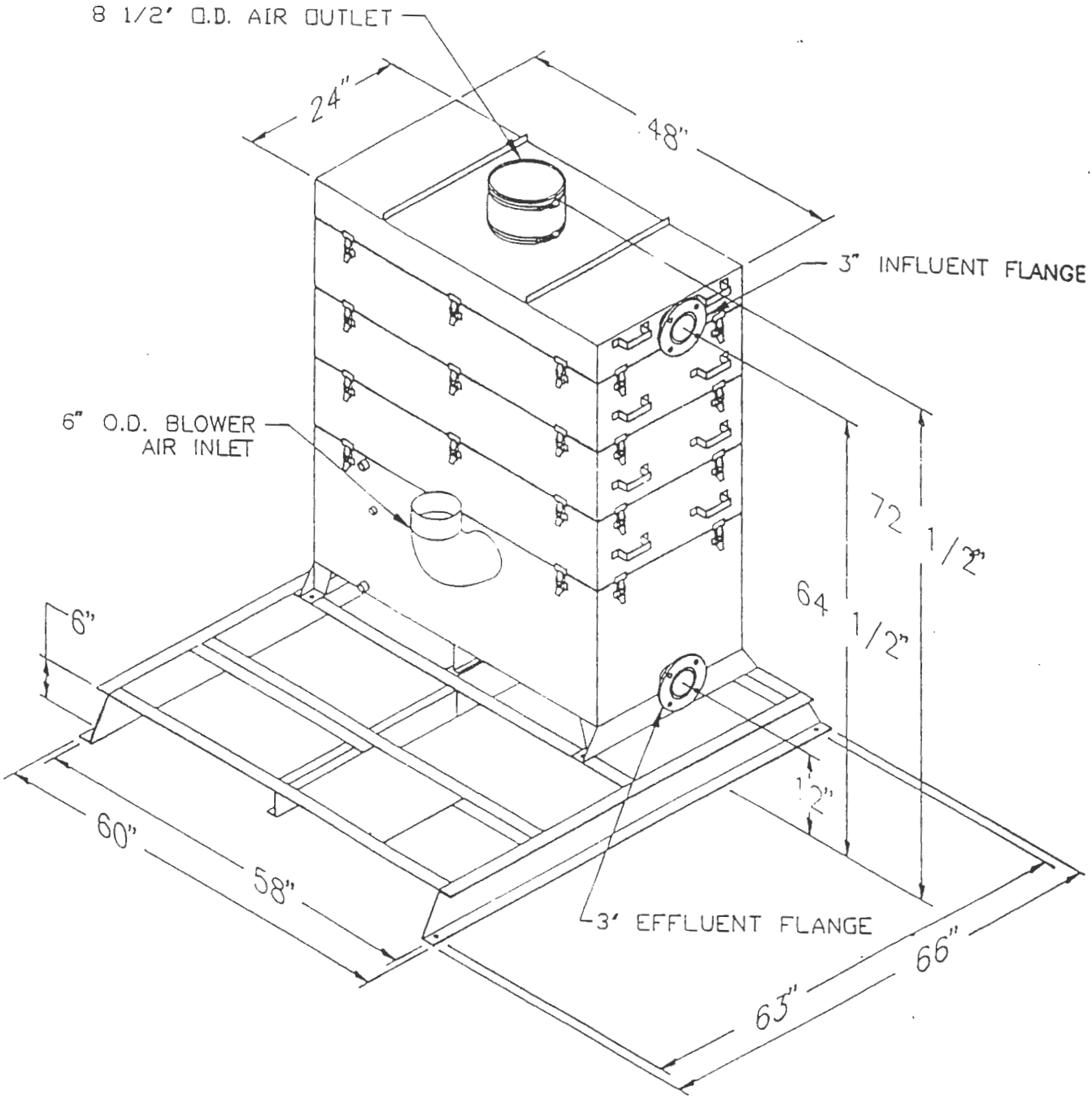

NOTE: Adjust overall height by 10 1/4" for each aeration tray added or deleted. Influent flange on the same side as effluent with odd number of trays.

Sales Drawing #133575
94.05.09

©CARBONAIR 1994

STAT 80 W/ ROTRON & OPTIONAL KITS

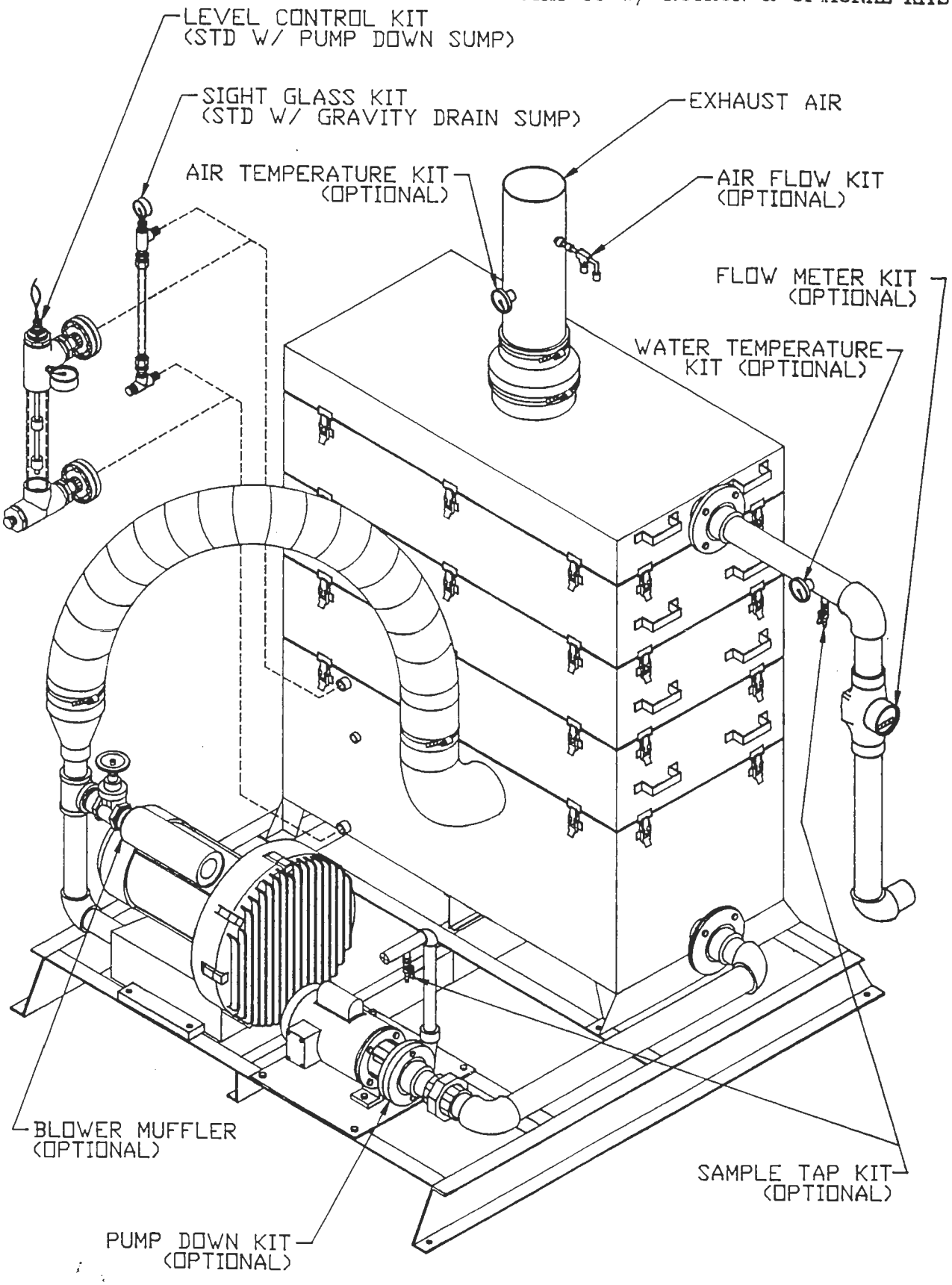

Sales Drawing #133380
94.05.20
©CARBONAIR 1994

GROUNDWATER INFLUENT CONCENTRATIONS AND REMOVAL EFFICIENCIES

Carbonair Environmental Services
8640 Monticello Lane
Maple Grove, MN 55369
612-425-2992 800-526-4999
Fax: 612-425-6882

09/13/94
10:25:21

----------STAT 80----------
VERSION 2.3

WATER FLOW RATE: 50.0 gpm
AIR FLOW RATE: 300.0 cfm
WATER TEMPERATURE: 55.0 F
AIR-TO-WATER RATIO: 45:1

Influent Conc. for NAPHTHALENE 66.0 ppb

NO OF TRAY	REMOVAL EFF %	EFF CONC ppb	OFF-GAS CONC ug/l	AIR EMISSION lb/d
1	18.61421	53.7146	0.2730	0.0074
2	28.56065	47.1500	0.4189	0.0113
3	34.54411	43.2009	0.5066	0.0137
4	38.40299	40.6540	0.5632	0.0152
5	41.00444	38.9371	0.6014	0.0162
6	42.81101	37.7447	0.6279	0.0170

Influent Conc. for PENTACHLOROPHENOL 54.0 ppb

NO OF TRAY	REMOVAL EFF %	EFF CONC ppb	OFF-GAS CONC ug/l	AIR EMISSION lb/d
1	0.13744	53.9258	0.0016	0.0000
2	0.21526	53.8838	0.0026	0.0001
3	0.25936	53.8599	0.0031	0.0001
4	0.28437	53.8464	0.0034	0.0001
5	0.29856	53.8388	0.0036	0.0001
6	0.30661	53.8344	0.0037	0.0001

Influent Conc. for PHENOL 5.0 ppb

NO OF TRAY	REMOVAL EFF %	EFF CONC ppb	OFF-GAS CONC ug/l	AIR EMISSION lb/d
1	0.01764	4.9991	0.0000	0.0000
2	0.02636	4.9987	0.0000	0.0000
3	0.03067	4.9985	0.0000	0.0000
4	0.03280	4.9984	0.0000	0.0000
5	0.03386	4.9983	0.0000	0.0000
6	0.03438	4.9983	0.0000	0.0000

Influent Conc. for 4-METHYLPHENOL 4.0 ppb

NO OF TRAY	REMOVAL EFF %	EFF CONC ppb	OFF-GAS CONC ug/l	AIR EMISSION lb/d
1	0.01547	3.9994	0.0000	0.0000
2	0.02339	3.9991	0.0000	0.0000
3	0.02745	3.9989	0.0000	0.0000
4	0.02953	3.9988	0.0000	0.0000
5	0.03060	3.9988	0.0000	0.0000
6	0.03114	3.9988	0.0000	0.0000

Carbonair Environmental Services
8640 Monticello Lane
Maple Grove, MN 55369
612-425-2992 800-526-4999
Fax: 612-425-6882

09/13/94
10:25:21

----------STAT 80----------
VERSION 2.3

WATER FLOW RATE: 50.0 gpm
AIR FLOW RATE: 300.0 cfm
WATER TEMPERATURE: 55.0 F
AIR-TO-WATER RATIO: 45:1

Influent Conc. for 2-METHYLNAPHTHALENE 12.0 ppb

NO OF TRAY	REMOVAL EFF %	EFF CONC ppb	OFF-GAS CONC ug/l	AIR EMISSION lb/d
1	16.08368	10.0700	0.0429	0.0012
2	24.86675	9.0160	0.0663	0.0018
3	30.17826	8.3786	0.0805	0.0022
4	33.59054	7.9691	0.0896	0.0024
5	35.86853	7.6958	0.0956	0.0026
6	37.42854	7.5086	0.0998	0.0027

Influent Conc. for TOTAL VOCs 141.0 ppb

NO OF TRAY	REMOVAL EFF %	EFF CONC ppb	OFF-GAS CONC ug/l	AIR EMISSION lb/d
1	10.13556	126.7089	0.3176	0.0086
2	15.56917	119.0475	0.4878	0.0132
3	18.83914	114.4368	0.5903	0.0159
4	20.94555	111.4668	0.6563	0.0177
5	22.36262	109.4687	0.7007	0.0189
6	23.34413	108.0848	0.7314	0.0198

Carbonair Environmental Services
8640 Monticello Lane
Maple Grove, MN 55369
612-425-2992 800-526-4999
Fax: 612-425-6882

09/06/94
15:11:50

----------STAT 80----------
VERSION 2.3

WATER FLOW RATE: 50.0 gpm
AIR FLOW RATE: 300.0 cfm
WATER TEMPERATURE: 55.0 F
AIR-TO-WATER RATIO: 45:1

Influent Conc. for TRICHLOROETHENE 37000.0 ppb

NO OF TRAY	REMOVAL EFF %	EFF CONC ppb	OFF-GAS CONC ug/l	AIR EMISSION lb/d
1	84.32453	5799.9223	693.3351	18.7283
2	97.38842	966.2849	800.7492	21.6298
3	99.56063	162.5684	818.6096	22.1122
4	99.92596	27.3954	821.6134	22.1933
5	99.98752	4.6178	822.1196	22.2070
6	99.99790	0.7784	822.2049	22.2093

Influent Conc. for TRANS-1,2-DICHLOROETHENE 74000.0 ppb

NO OF TRAY	REMOVAL EFF %	EFF CONC ppb	OFF-GAS CONC ug/l	AIR EMISSION lb/d
1	82.58162	12889.5995	1358.0089	36.6824
2	96.70348	2439.4264	1590.2350	42.9553
3	99.36675	468.6084	1634.0309	44.1383
4	99.87801	90.2743	1642.4383	44.3654
5	99.97649	17.4002	1644.0578	44.4091
6	99.99547	3.3542	1644.3699	44.4175

Influent Conc. for VINYL CHLORIDE 230000.0 ppb

NO OF TRAY	REMOVAL EFF %	EFF CONC ppb	OFF-GAS CONC ug/l	AIR EMISSION lb/d
1	94.43365	12802.6130	4826.6086	130.3758
2	99.68757	718.5811	5095.1426	137.6295
3	99.98246	40.3510	5110.2144	138.0366
4	99.99901	2.2659	5111.0608	138.0594
5	99.99994	0.1272	5111.1083	138.0607
6	100.00000	0.0071	5111.1110	138.0608

Influent Conc. for CHLOROFORM 210.0 ppb

NO OF TRAY	REMOVAL EFF %	EFF CONC ppb	OFF-GAS CONC ug/l	AIR EMISSION lb/d
1	73.78018	55.0616	3.4431	0.0930
2	92.26966	16.2337	4.3059	0.1163
3	97.64751	4.9402	4.5569	0.1231
4	99.27733	1.5176	4.6329	0.1251
5	99.77736	0.4675	4.6563	0.1258
6	99.93135	0.1442	4.6635	0.1260

Carbonair Environmental Services
8640 Monticello Lane
Maple Grove, MN 55369
612-425-2992 800-526-4999
Fax: 612-425-6882

09/06/94
15:11:50

----------STAT 80----------
VERSION 2.3

WATER FLOW RATE: 50.0 gpm
AIR FLOW RATE: 300.0 cfm
WATER TEMPERATURE: 55.0 F
AIR-TO-WATER RATIO: 45:1

Influent Conc. for 1,1-DICHLOROETHENE 170.0 ppb

NO OF TRAY	REMOVAL EFF %	EFF CONC ppb	OFF-GAS CONC ug/l	AIR EMISSION lb/d
1	91.88913	13.7885	3.4714	0.0938
2	99.32938	1.1400	3.7524	0.1014
3	99.94447	0.0944	3.7757	0.1020
4	99.99540	0.0078	3.7776	0.1020
5	99.99962	0.0006	3.7778	0.1020
6	99.99997	0.0001	3.7778	0.1020

Influent Conc. for 1,1-DICHLOROETHANE 160.0 ppb

NO OF TRAY	REMOVAL EFF %	EFF CONC ppb	OFF-GAS CONC ug/l	AIR EMISSION lb/d
1	79.33358	33.0663	2.8207	0.0762
2	95.30556	7.5111	3.3886	0.0915
3	98.91192	1.7409	3.5169	0.0950
4	99.74664	0.4054	3.5465	0.0958
5	99.94094	0.0945	3.5535	0.0960
6	99.98623	0.0220	3.5551	0.0960

Influent Conc. for 1,1,1-TRICHLOROETHANE 72.0 ppb

NO OF TRAY	REMOVAL EFF %	EFF CONC ppb	OFF-GAS CONC ug/l	AIR EMISSION lb/d
1	86.96104	9.3880	1.3914	0.0376
2	98.22816	1.2757	1.5717	0.0425
3	99.75791	0.1743	1.5961	0.0431
4	99.96690	0.0238	1.5995	0.0432
5	99.99547	0.0033	1.5999	0.0432
6	99.99938	0.0004	1.6000	0.0432

Influent Conc. for TETRACHLOROETHENE 2.0 ppb

NO OF TRAY	REMOVAL EFF %	EFF CONC ppb	OFF-GAS CONC ug/l	AIR EMISSION lb/d
1	86.27047	0.2746	0.0383	0.0010
2	98.03850	0.0392	0.0436	0.0012
3	99.71821	0.0056	0.0443	0.0012
4	99.95948	0.0008	0.0444	0.0012
5	99.99417	0.0001	0.0444	0.0012
6	99.99916	0.0000	0.0444	0.0012

Carbonair Environmental Services
8640 Monticello Lane
Maple Grove, MN 55369
612-425-2992 800-526-4999
Fax: 612-425-6882

09/06/94
15:11:50

----------STAT 80----------
VERSION 2.3

WATER FLOW RATE: 50.0 gpm
AIR FLOW RATE: 300.0 cfm
WATER TEMPERATURE: 55.0 F
AIR-TO-WATER RATIO: 45:1

Influent Conc. for BENZENE 170.0 ppb

NO OF TRAY	REMOVAL EFF %	EFF CONC ppb	OFF-GAS CONC ug/l	AIR EMISSION lb/d
1	71.51294	48.4280	2.7016	0.0730
2	90.80993	15.6231	3.4306	0.0927
3	96.92534	5.2269	3.6616	0.0989
4	98.95910	1.7695	3.7385	0.1010
5	99.64622	0.6014	3.7644	0.1017
6	99.87959	0.2047	3.7732	0.1019

Influent Conc. for TOLUENE 880.0 ppb

NO OF TRAY	REMOVAL EFF %	EFF CONC ppb	OFF-GAS CONC ug/l	AIR EMISSION lb/d
1	77.07521	201.7381	15.0725	0.4071
2	94.23555	50.7272	18.4283	0.4978
3	98.51858	13.0365	19.2659	0.5204
4	99.61718	3.3688	19.4807	0.5262
5	99.90093	0.8718	19.5362	0.5277
6	99.97435	0.2257	19.5505	0.5281

Influent Conc. for ETHYLBENZENE 180.0 ppb

NO OF TRAY	REMOVAL EFF %	EFF CONC ppb	OFF-GAS CONC ug/l	AIR EMISSION lb/d
1	79.32013	37.2238	3.1728	0.0857
2	95.39935	8.2812	3.8160	0.1031
3	98.96053	1.8711	3.9584	0.1069
4	99.76433	0.4242	3.9906	0.1078
5	99.94653	0.0963	3.9979	0.1080
6	99.98786	0.0218	3.9995	0.1080

Influent Conc. for XYLENES (TOTAL) 540.0 ppb

NO OF TRAY	REMOVAL EFF %	EFF CONC ppb	OFF-GAS CONC ug/l	AIR EMISSION lb/d
1	66.45484	181.1439	7.9746	0.2154
2	87.35111	68.3040	10.4821	0.2831
3	95.03685	26.8010	11.4044	0.3081
4	98.02305	10.6755	11.7628	0.3177
5	99.20786	4.2775	11.9049	0.3216
6	99.68186	1.7180	11.9618	0.3231

Carbonair Environmental Services
8640 Monticello Lane
Maple Grove, MN 55369
612-425-2992 800-526-4999
Fax: 612-425-6882

09/06/94
15:11:50

----------STAT 80----------
VERSION 2.3

WATER FLOW RATE: 50.0 gpm
AIR FLOW RATE: 300.0 cfm
WATER TEMPERATURE: 55.0 F
AIR-TO-WATER RATIO: 45:1

Influent Conc. for TOTAL VOCs 343384.0 ppb

NO OF TRAY	REMOVAL EFF %	EFF CONC ppb	OFF-GAS CONC ug/l	AIR EMISSION lb/d
1	90.65995	32072.2476	6918.0389	186.8693
2	98.74967	4293.4276	7535.3461	203.5440
3	99.78874	725.4188	7614.6351	205.6857
4	99.95977	138.1292	7627.6860	206.0382
5	99.99168	28.5584	7630.1209	206.1040
6	99.99811	6.4767	7630.6116	206.1173

VAPOR PHASE CARBON MODEL CALCULATIONS

CARBONAIR ENVIRONMENTAL SYSTEMS
8640 MONTICELLO LANE
MAPLE GROVE, MN 55369
PHONE: 612-425-2992
FAX: 612-425-6882

DESIGN COMPOUND	1,2-DCE	
EXPECTED CONC.	1644.	UG/L
MODEL CONC.	2332.	UG/L
TEMPERATURE	90.00	F
OPERATING PRESS	760.0	MM MERCURY
VAPOR PRESSURE	272.9	MM MERCURY
K VALUE	600.1	(UMOLE/GM)(L/UMOLE)**1/N
1/N VALUE	0.3463	(DIMENSIONLESS)
CARBON CAPACITY	18.13	%
AIR FLOW RATE	300.0	CFM
CARBON USAGE	346.4	LB/DAY

CARBONAIR ENVIRONMENTAL SYSTEMS, INC.
8640 MONTICELLO LANE
MAPLE GROVE, MINNESOTA
55369-4547
612-425-2992 800-526-4999
FAX 612-425-6882

FAX - 2 Pages (including this page)

DATE: 10/13/94

TO: Pete Coots

FROM: Chris Riddle

Please reply to:

Carbonair Environmental Services
8640 Monticello Lane
Maple Grove, MN 55369

Phone: 612-425-2992
800-526-4999

FAX: 612-425-6882

Here is the vapor phase emission data you requested. Based upon a 50 gpm flow rate and a total of 450,000 gals to be treated, the time required is 6.2 days. This translates into 2,678,400 cfm of air being treated. The carbon system was sized according to these assumptions.

Please call if you need additional information

Fax: 716/271-0251

CARBONAIR ENVIRONMENTAL SYSTEMS, INC.
8840 MONTICELLO LANE
MAPLE GROVE, MINNESOTA
55369-4647
612•425•2992 800•526•4999
FAX 612•425•6882

October 5, 1994

Mr. Pete Coutts
IT Corporation

Re: Proposal Number: 104607B
Project Name: Air stripper rental
Location: Romulus, New York

Dear Mr. Coutts:

Carbonair is pleased to quote products and services for the referenced project. The proposal is based on the information provided. Detailed product specifications are attached.

Executive Summary

Based upon the information provided, we understand the scope of work to be the supply of a ground water treatment system for the referenced site. The system is to be capable of treating up to 50 gpm of contaminated ground water. The equipment is to include a low profile air stripper, followed by vapor phase carbon units for treatment of the off-gas if required. It is our understanding that the equipment is to be rented for a minimum of three months. The pricing below is based upon a three month minimum rental term.

We recommend a Carbonair STAT 80 low profile air stripper with 6 trays to treat the 50 gpm. Attached is a copy of the modeling results showing the expected removal efficiencies and effluent concentrations based upon the influent data provided.

The air stripper may require vapor phase carbon treatment. For this, we recommend an in-line duct heater, to reduce the relative humidity in the vapor stream, and one GPC 48 vapor phase carbon adsorber to treat the off-gas. The GPC 48 will contain 2,500 pounds of vapor phase carbon. We estimate that approximately 346.4 pounds of carbon would be used per day. This estimation assumes 24 hours a day of operation at 50 gpm. This translates into 0.0048 lbs. of carbon per gallon of treated water. Assuming that a total of 450,000 gallons requires treatment, a total of 2,165 pounds of carbon would be used. We recommend that 2,500 lbs. of carbon be supplied, in case higher influent concentrations are encountered.

The following contains additional details on each of the treatment system.

(1) Carbonair STAT 80 low profile air stripper
- SST sump with high level alarm
- 6 trays with spacer, demister, and fasteners
- 7.5 HP, 3 phase, TEFC blower
- mounted on a common skid

(1) Carbonair model GPC 48 vapor phase carbon vessel
- 4' long x 4' wide x 7' high steel vessel
- 2,500 pounds of vapor phase carbon

(1) In-line duct heater
- 5 kW heater

(1) Bag filter housing
- 25 micron filter bag
- 220 gpm capacity

VAPOR PHASE REMOVAL EFFICIENCIES

CARBONAIR

10/13/94

VAPOR PHASE CARBON ADSORPTION MODEL CALCULATIONS

Application: Treatment of Off-Gas from STAT 80 (6 Trays)

Carbon Adsorber(s): One GPC48
Total Mass of Carbon: 2500 lbs
Total Flow Rate: 300 cfm
Adsorber Loading: 6 cfm/sq.ft.
Total Empty Bed Contact Time: 17 sec

Critical Compound: 1,2-DCE
Expected Influent Concentration: 1644 ug/L
Model Influent Concentration: 2332 ug/L
(accounting for the competitive effect of the other compounds)
Effluent Criteria: Non-detectable (< 1 ug/L)

TIME(DAYS)	VOLUME TREATED(CU.FT.)	EFF. CONC./INF. CONC.	EFF. CONC.(UG/L)
1.0	432077.	0.0000	0.0000
2.0	864154.	0.0000	0.0000
3.0	1296231.	0.0000	0.0000
4.0	1728308.	0.0000	0.0000
5.0	2160385.	0.0000	0.0000
6.0	2592462.	0.0000	0.0000
7.0	3024539	0.2412	562.4456
8.0	3456616.	0.9991	2329.9722
9.0	3888693.	0.9990	2329.7006
10.0	4320770.	0.9993	2330.2800
11.0	4752847.	0.9995	2330.8594
12.0	5184924.	0.9997	2331.4000
13.0	5617001.	0.9998	2331.5624
14.0	6049078.	0.9999	2331.7247
15.0	6481155.	1.0000	2331.8871
16.0	6913232.	1.0000	2331.9541
17.0	7345309.	1.0000	2331.9710
18.0	7777386.	1.0000	2331.9878
19.0	8209463.	1.0000	2332.0010
20.0	8641540.	1.0000	2332.0010

GPC Series Gas Phase Carbon Adsorbers

GPC gas phase carbon adsorbers are designed to provide efficient, economical means to control odor, toxic vapors and corrosive gases. Several types of activated carbons are available for a variety of applications. Untreated activated carbons remove organic toxic gases such as trichloroethene, perchloroethene, benzene, toluene, ethylbenzene, xylenes and hydrocarbons. Chemically treated activated carbons remove specific gases such as hydrogen sulfide, sulfur dioxide, nitrogen oxides, halogens, mercury, aldehydes and mercaptans.

Specifications for each model are listed on reverse side.

GPC 3 is ideal for controlling toxic vapor and corrosive gas vented from sources of small volume emission (storage tanks, reactor vessels, sewage treatment plants).

GPC 4 and **8** are designed specifically to control toxic vapor and corrosive gas vented from storage tanks, reactor vessels, sewage treatment plants and other sources of small volume emission. Welded steel construction provides exceptional strength and durability. The units are forklift compatible for trouble-free transportation and quick installation. Interiors are double-coated with a corrosion-resistant epoxy polyamide, ideal for the corrosive and abrasive conditions of gas phase service. Suitable for any gas phase application, including air stripper and soil venting off-gas treatment.

GPC 12, GPC 20 and **GPC 48**'s welded steel construction provides exceptional strength and durability while the skid mounting and forklift compatibility make transportation and installation quick and trouble free. Interior is double coated with a corrosive-resistant epoxy polyamide, ideal for the corrosive and abrasive conditions of gas phase service. Suitable for any gas phase application, including air stripper and soil venting off-gas treatment.

GPC 70 and **GPC 120** are among the largest gas phase carbon adsorbers available. Welded steel construction provides exceptional strength and durability, while the integrated lifting eyes and roll-off truck feature make transportation and installation quick and trouble free. Interior is double coated with a corrosion-resistant epoxy polyamide, ideal for the corrosive and abrasive conditions of gas phase service.

GPC 48

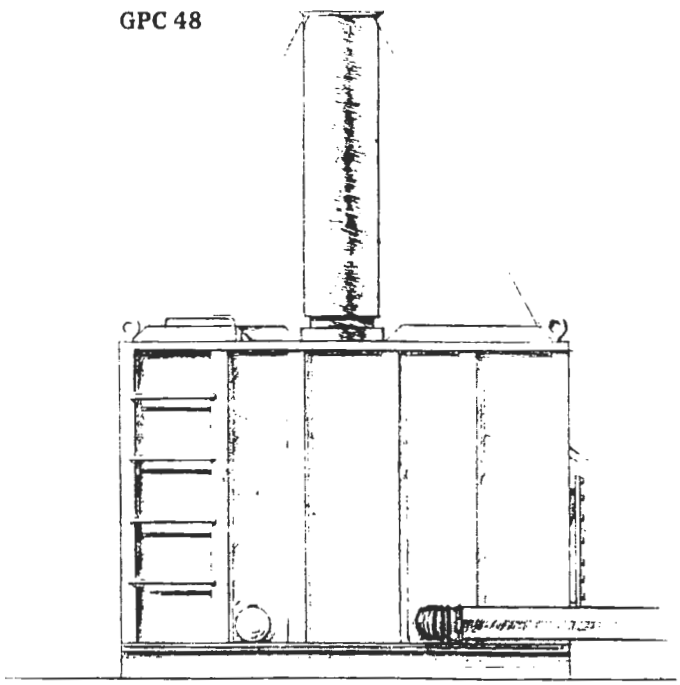

OPTIONS

Materials of construction.
Type of carbon.
Blower(s) and controls.
Humidity control.
Influent/effluent ducting.
Additional sampling couplings and valves.
Discharge stacks.

SPECIFICATIONS

Listed on other side.

Carbon Adsorber–Vapor Phase
GPC 48

NOTE: VESSEL SHOWN WITH ALL CAPS AND COVERS INSTALLED.

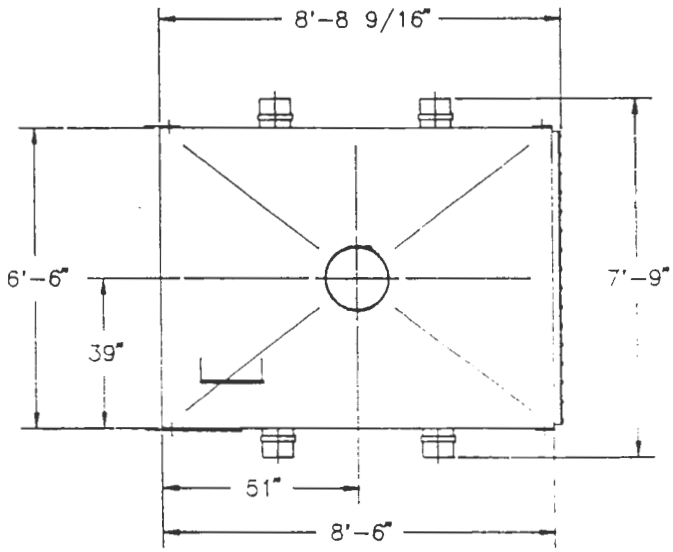

TOP VIEW

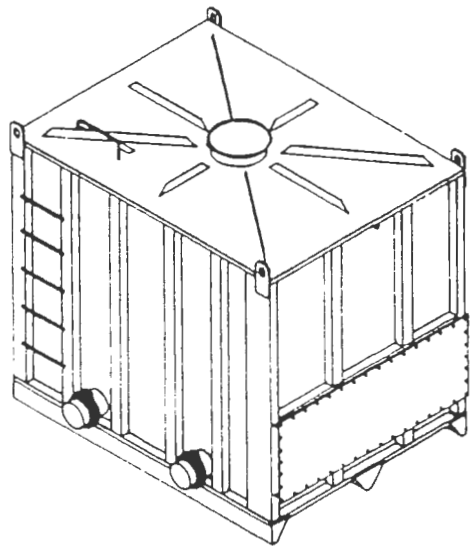

ISO VIEW

(3/4 SCALE)

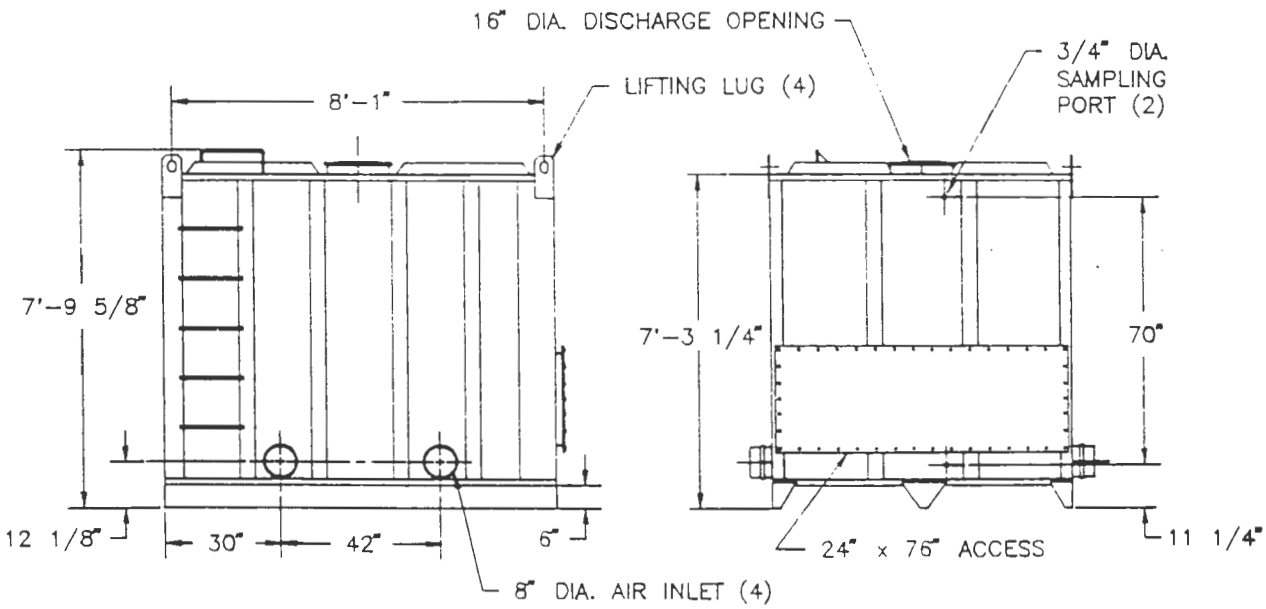

SIDE VIEW

FRONT END VIEW

Sales Drawing #106991
91.08.09
©CARBONAIR 1991

PRESSURE DROP THROUGH CARBONAIR VAPOR–PHASE CARBON UNITS

Based on: CECA 410 GE Carbon
Temperature: 70°F

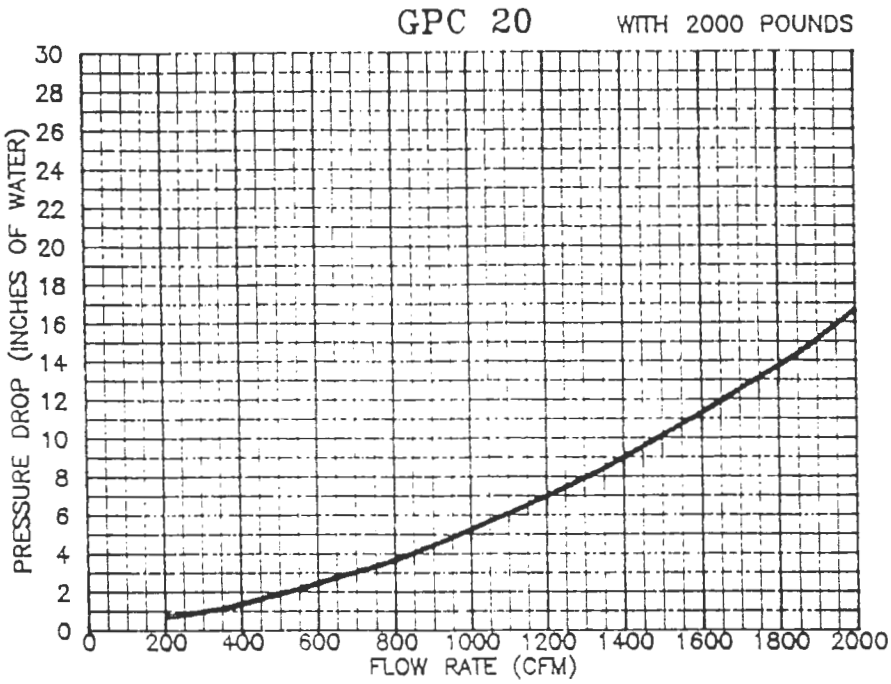

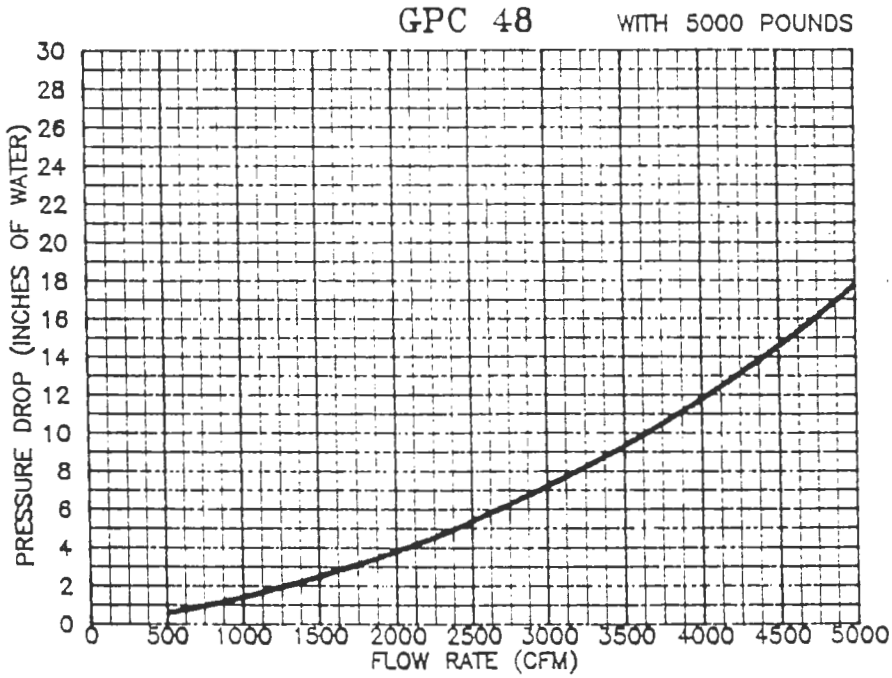

Sales Drawing #117226(03)
93.11.16

©CARBONAIR 1993

November 1, 1994

Mr. Robert Scott
Permit Administrator
New York State Department of Environmental Conservation
Region 8 Office
6274 East Avon-Lima Road
Avon, New York 14414

Request for Authorization to Construct and Operate Emission Point Sources - Correction

Dear Mr. Scott:

IT Corporation is providing the following correction to the Request for Authorization to Construct and Operate Emission Point Source SEDA01.

The Low Temperature Thermal Desorption units (LTTD) primary combustion chamber will operate in the range of 800 to 900° F rather then at a temperature greater than 900° F as previously stated this correction will not affect possible emissions from the LTTD unit as presented in the original September 28, 1994 submittal.

Please do not hesitate to call me at (716) 271-6430 with any questions regarding the above.

Respectfully Submitted,

IT CORPORATION

Peter W. Coutts
Project Technical Manager

Jeffery D. Korb
Technical Manager - Air

9C:\docs\coutts\scott.N01

INTERNATIONAL TECHNOLOGY CORPORATION

October 16, 1994

Mr. Robert Scott
Permit Administrator
New York State
Department of Environmental Conservation
Region 8 Office
6274 East Avon-Lima Road
Avon, New York 14414

Project No. 519200

Mr. Kamal Gupta
Bureau of Eastern Remedial Action
Division of Hazardous Waste Remediation
New York State Department of Environmental Consveration
50 Wolf Road
Albany, New York 12233

Addendum to Request for Authorization to Construct and Operate Emission Point Sources

Dear Mr. Scott:

IT Corporation (IT), on behalf of the U.S. Army Corps of Engineers (USACE), Omaha District and the Seneca Army Depot Activity (SEDA), previously submitted on September 28, 1994 a request for authorization to construct and operate two (2) separate emission point sources as part of a USACE Rapid Response remedial action at the Seneca Army Depot in Romulus, New York. Discussions with Mr. Scott and Mr. Gupta have led IT to forward this addendum to our original documentation. As requested, IT has agreed to utilize vapor-phase carbon control on the air stream from the air stripper system in order to further manage and control volatile organic compound (VOC) emissions resulting from project dewatering operations. Emissions calculations demonstrate that the use of the vapor-phase carbon for this project will effectively reduce the stripper offgas emissions to nondetectable concentrations.

The attached information contains the basic carbon system specifications and operating parameters, and includes modeling data to demonstrate expected emission rates resulting from the units operation during this project. If additional information is required, we will be happy to provide it as needed. Once again, please contact the undersigned at (716) 271-6430 if you have any questions or comments. IT wishes to thank you ahead of time and appreciates your prompt and timely response to this issue.

Regional Office
140 Allen's Creek Road • Suite 150 • Rochester, New York 14618 • 716-271-6430

IT Corporation is a wholly owned subsidiary of International Technology Corporation

Respectfully Submitted,

IT CORPORATION

Jeffrey D. Korb
Technical Manager- Air

Peter W. Coutts
Project Technical Manager

JDK:PWC:jk
Attachments

cc: Mr. Andrew Winslow- U.S. Army Corps of Engineers, Omaha District
Mr. Randall Battaglia- U.S. Army, Seneca Army Depot
Mr. Douglas Wehner- IT Corporation

CARBONAIR
Water
Treatment

STAT Series
Sieve Tray Aeration Technology

Carbonair's exclusive STAT series represents the best choice for low profile air strippers with design simplicity, flexibility and high performance.

In Carbonair's STAT units, the water and air are contacted in step-wise fashion on multiple trays. The water enters at the top and flows across each tray. The air passes upwards through openings in the trays, then bubbles through the water to form "a surface of foam" which provides extreme turbulence and excellent volatilization. Since the water in Carbonair's STAT units flows horizontally across each tray, the traveling path length of water and the required removal efficiency can be achieved by increasing both the number and length of the trays. Therefore, the STAT units provide much lower tower height than the conventional packed towers.

Another advantage of Carbonair's STAT units is that air and blower power consumption are effectively utilized since a single air stream passes through every tray before exiting the tower. As a result of minimal air flows, the organic contaminants are concentrated and effectively removed by vapor phase carbon.

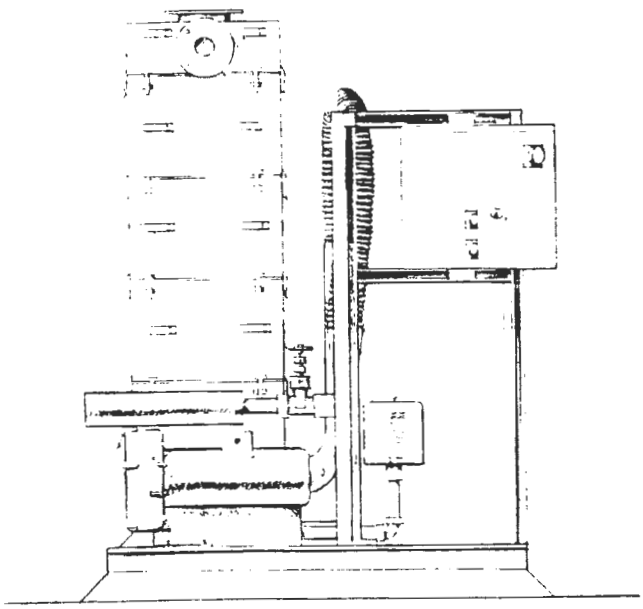

Low tower height yields numerous other advantages: rapid installation, easy winterization, inconspicuous appearance, easy shipping and easy maintenance. The STAT unit also reduces the potential for fouling since it contains no packing media and provides an extreme turbulent condition.

Carbonair's STAT units are available with a number of plate configurations, blowers and controls, and can achieve removal efficiency up to 99.99%.

OPTIONS

Explosion-proof controls.

Discharge pump.

Well control.

Off-gas carbon.

Humidity control.

Carbon polish.

Winterized enclosure.

FEATURES

The low air flow and minimal tower height make the unit ideal for off-gas treatment.

The compact unit can be installed in a few hours.

Controls include motor starter, level switch, air pressure gauge and air pressure switch.

Panel comes with blower, manual-off-automatic switch and alarm lights.

Computer modeling customizes the system for optimum air flow, number and size of trays.

SPECIFICATIONS

Listed on other side.

CARBONAIR
ENVIRONMENTAL SERVICES

8640 Monticello Lane
Maple Grove, MN 55369-4547
612-425-2992 800-526-4999
Fax 612-425-6882

STAT SPECIFICATIONS

STAT MODEL	TRAY LENGTH (ft.)	TRAY WIDTH (ft.)	HEIGHT PER STAGE (in.)	SUMP HEIGHT	DEMISTER HEIGHT (in.)	MAXIMUM HEIGHT (in.)*	LIQUID FLOW (gpm)	MINIMUM AIR FLOW (cfm)	MAXIMUM AIR FLOW (cfm)
15	2	0.75	10	22	9.5	93	0.5-15	60	80
30	3	1	10	24	10.5	96	1-40	100	150
80	4	2	10	24	11.5	97	5-100	300	350
180	6	3	10	24	12.0	98	10-200	650	700

*For 6-Tray unit

BENZENE REMOVAL EFFICIENCY AT 55° F

Predicted by Computer Modeling
(Graphs show removal efficiency at minimum air flow rates.
At maximum air flow rates, efficiency is slightly improved.)

STAT 15
(60 CFM)

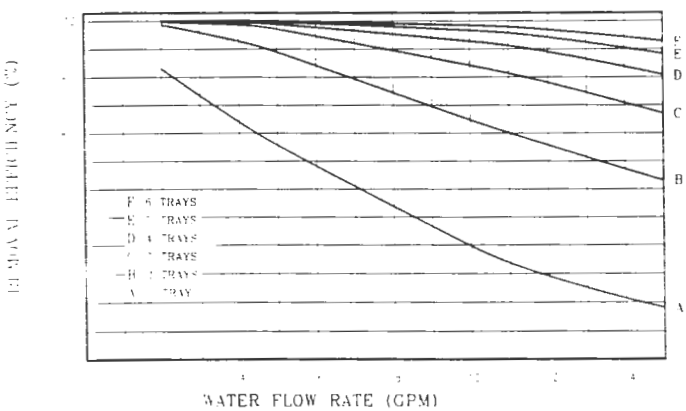

STAT 30
(100 CFM)

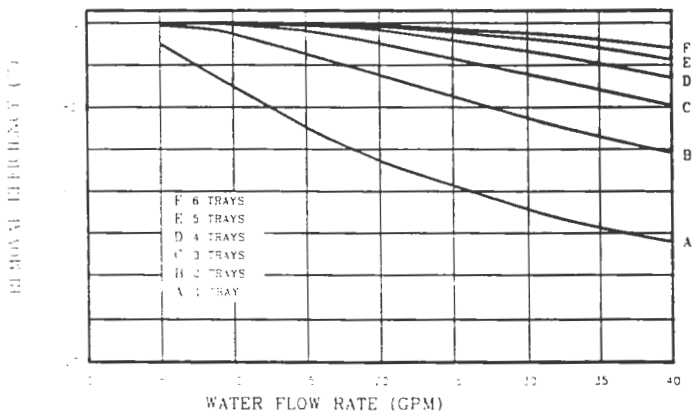

STAT 80
(300 CFM)

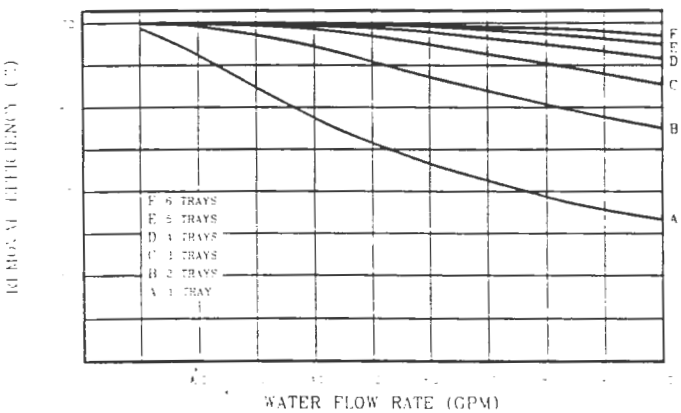

STAT 180
(650 CFM)

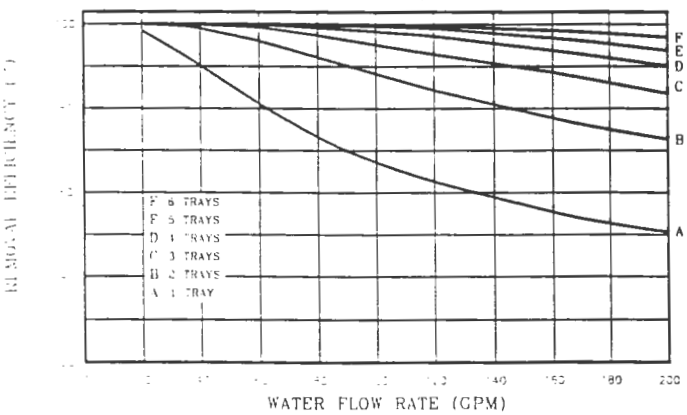

PRINTED ON RECYCLED PAPER

Product Date Sheet EE198A-94
© 1994 by Carbonair

STAT 80 Architectural View

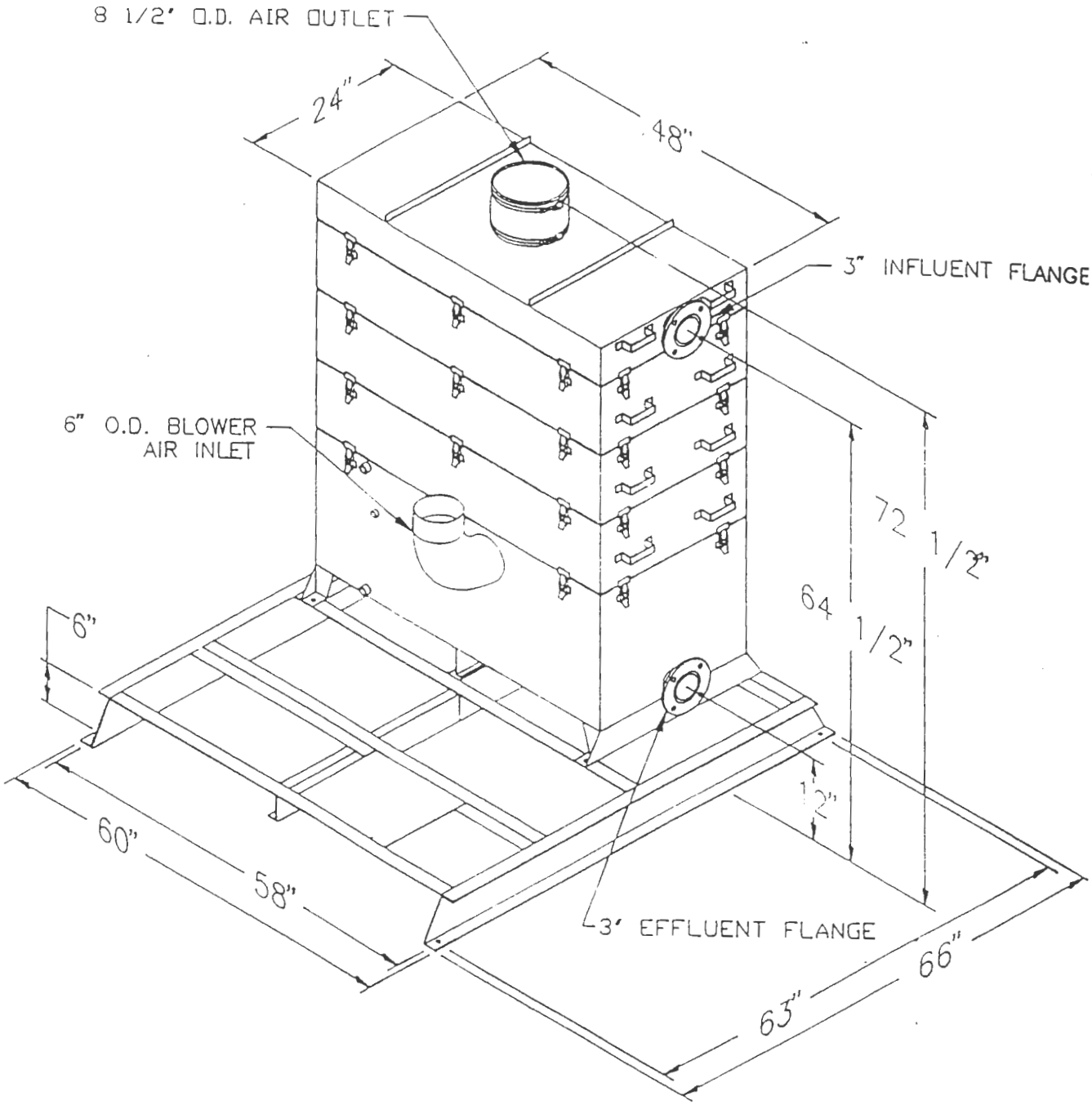

NOTE: Adjust overall height by 10 1/4" for each aeration tray added or deleted. Influent flange on the same side as effluent with odd number of trays.

Sales Drawing #133575
94.05.09
©CARBONAIR 1994

STAT 80 W/ ROTRON & OPTIONAL KITS

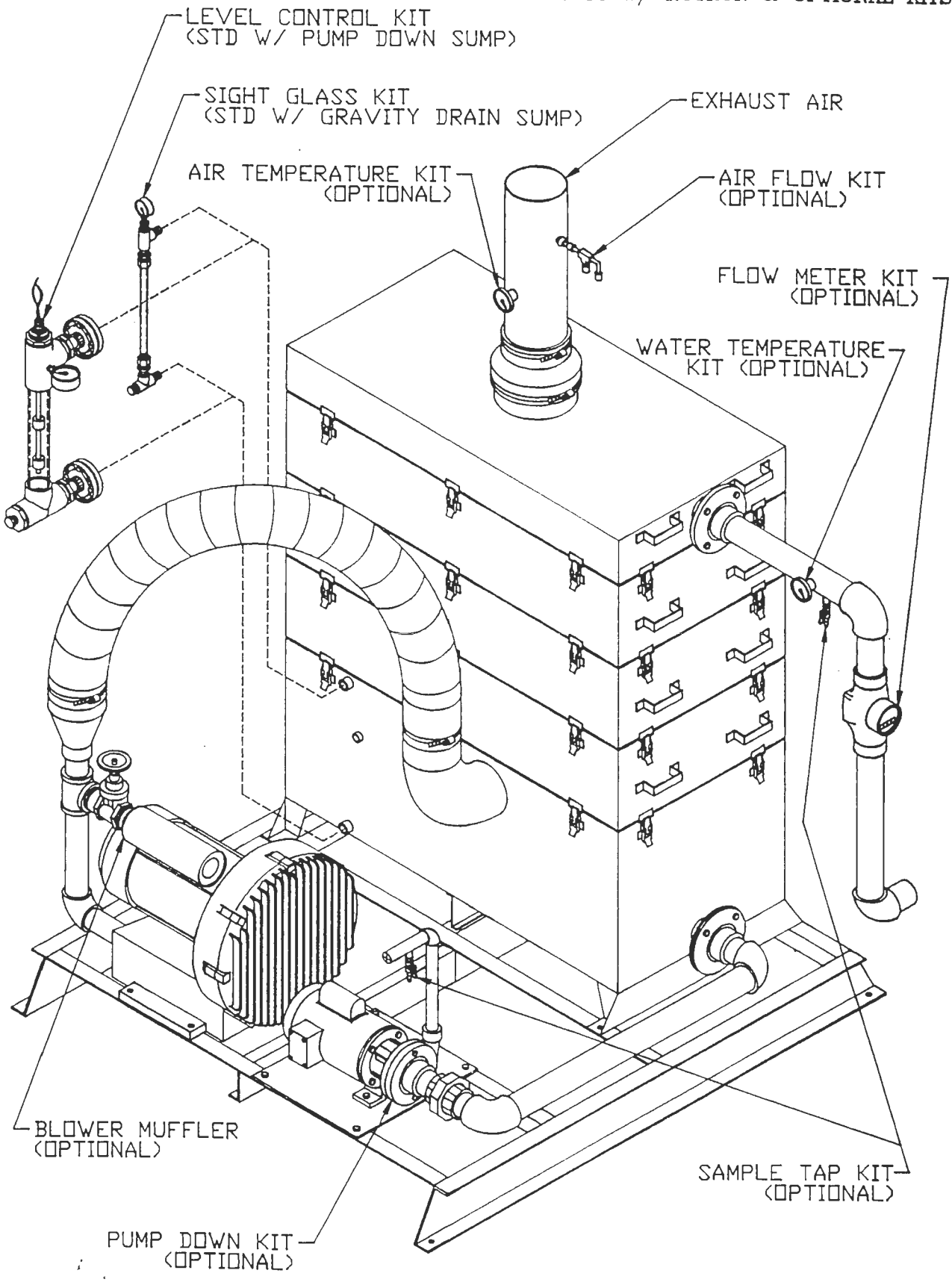

Sales Drawing #133380
94.05.20
©CARBONAIR 1994

GROUNDWATER INFLUENT CONCENTRATIONS AND REMOVAL EFFICIENCIES

Carbonair Environmental Services
8640 Monticello Lane
Maple Grove, MN 55369
612-425-2992 800-526-4999
Fax: 612-425-6882

09/13/94
10:25:21

----------STAT 80----------
VERSION 2.3

WATER FLOW RATE: 50.0 gpm
AIR FLOW RATE: 300.0 cfm
WATER TEMPERATURE: 55.0 F
AIR-TO-WATER RATIO: 45:1

Influent Conc. for NAPHTHALENE 66.0 ppb

NO OF TRAY	REMOVAL EFF %	EFF CONC ppb	OFF-GAS CONC ug/l	AIR EMISSION lb/d
1	18.61421	53.7146	0.2730	0.0074
2	28.56065	47.1500	0.4189	0.0113
3	34.54411	43.2009	0.5066	0.0137
4	38.40299	40.6540	0.5632	0.0152
5	41.00444	38.9371	0.6014	0.0162
6	42.81101	37.7447	0.6279	0.0170

Influent Conc. for PENTACHLOROPHENOL 54.0 ppb

NO OF TRAY	REMOVAL EFF %	EFF CONC ppb	OFF-GAS CONC ug/l	AIR EMISSION lb/d
1	0.13744	53.9258	0.0016	0.0000
2	0.21526	53.8838	0.0026	0.0001
3	0.25936	53.8599	0.0031	0.0001
4	0.28437	53.8464	0.0034	0.0001
5	0.29856	53.8388	0.0036	0.0001
6	0.30661	53.8344	0.0037	0.0001

Influent Conc. for PHENOL 5.0 ppb

NO OF TRAY	REMOVAL EFF %	EFF CONC ppb	OFF-GAS CONC ug/l	AIR EMISSION lb/d
1	0.01764	4.9991	0.0000	0.0000
2	0.02636	4.9987	0.0000	0.0000
3	0.03067	4.9985	0.0000	0.0000
4	0.03280	4.9984	0.0000	0.0000
5	0.03386	4.9983	0.0000	0.0000
6	0.03438	4.9983	0.0000	0.0000

Influent Conc. for 4-METHYLPHENOL 4.0 ppb

NO OF TRAY	REMOVAL EFF %	EFF CONC ppb	OFF-GAS CONC ug/l	AIR EMISSION lb/d
1	0.01547	3.9994	0.0000	0.0000
2	0.02339	3.9991	0.0000	0.0000
3	0.02745	3.9989	0.0000	0.0000
4	0.02953	3.9988	0.0000	0.0000
5	0.03060	3.9988	0.0000	0.0000
6	0.03114	3.9988	0.0000	0.0000

Carbonair Environmental Services
8640 Monticello Lane
Maple Grove, MN 55369
612-425-2992 800-526-4999
Fax: 612-425-6882

09/13/94
10:25:21

----------STAT 80----------
VERSION 2.3

WATER FLOW RATE: 50.0 gpm
AIR FLOW RATE: 300.0 cfm
WATER TEMPERATURE: 55.0 F
AIR-TO-WATER RATIO: 45:1

Influent Conc. for 2-METHYLNAPHTHALENE 12.0 ppb

NO OF TRAY	REMOVAL EFF %	EFF CONC ppb	OFF-GAS CONC ug/l	AIR EMISSION lb/d
1	16.08368	10.0700	0.0429	0.0012
2	24.86675	9.0160	0.0663	0.0018
3	30.17826	8.3786	0.0805	0.0022
4	33.59054	7.9691	0.0896	0.0024
5	35.86853	7.6958	0.0956	0.0026
6	37.42854	7.5086	0.0998	0.0027

Influent Conc. for TOTAL VOCs 141.0 ppb

NO OF TRAY	REMOVAL EFF %	EFF CONC ppb	OFF-GAS CONC ug/l	AIR EMISSION lb/d
1	10.13556	126.7089	0.3176	0.0086
2	15.56917	119.0475	0.4878	0.0132
3	18.83914	114.4368	0.5903	0.0159
4	20.94555	111.4668	0.6563	0.0177
5	22.36262	109.4687	0.7007	0.0189
6	23.34413	108.0848	0.7314	0.0198

Carbonair Environmental Services
8640 Monticello Lane
Maple Grove, MN 55369
612-425-2992 800-526-4999
Fax: 612-425-6882

09/06/94
15:11:50

----------STAT 80----------
VERSION 2.3

WATER FLOW RATE: 50.0 gpm
AIR FLOW RATE: 300.0 cfm
WATER TEMPERATURE: 55.0 F
AIR-TO-WATER RATIO: 45:1

Influent Conc. for TRICHLOROETHENE 37000.0 ppb

NO OF TRAY	REMOVAL EFF %	EFF CONC ppb	OFF-GAS CONC ug/l	AIR EMISSION lb/d
1	84.32453	5799.9223	693.3351	18.7283
2	97.38842	966.2849	800.7492	21.6298
3	99.56063	162.5684	818.6096	22.1122
4	99.92596	27.3954	821.6134	22.1933
5	99.98752	4.6178	822.1196	22.2070
6	99.99790	0.7784	822.2049	22.2093

Influent Conc. for TRANS-1,2-DICHLOROETHENE 74000.0 ppb

NO OF TRAY	REMOVAL EFF %	EFF CONC ppb	OFF-GAS CONC ug/l	AIR EMISSION lb/d
1	82.58162	12889.5995	1358.0089	36.6824
2	96.70348	2439.4264	1590.2350	42.9553
3	99.36675	468.6084	1634.0309	44.1383
4	99.87801	90.2743	1642.4383	44.3654
5	99.97649	17.4002	1644.0578	44.4091
6	99.99547	3.3542	1644.3699	44.4175

Influent Conc. for VINYL CHLORIDE 230000.0 ppb

NO OF TRAY	REMOVAL EFF %	EFF CONC ppb	OFF-GAS CONC ug/l	AIR EMISSION lb/d
1	94.43365	12802.6130	4826.6086	130.3758
2	99.68757	718.5811	5095.1426	137.6295
3	99.98246	40.3510	5110.2144	138.0366
4	99.99901	2.2659	5111.0608	138.0594
5	99.99994	0.1272	5111.1083	138.0607
6	100.00000	0.0071	5111.1110	138.0608

Influent Conc. for CHLOROFORM 210.0 ppb

NO OF TRAY	REMOVAL EFF %	EFF CONC ppb	OFF-GAS CONC ug/l	AIR EMISSION lb/d
1	73.78018	55.0616	3.4431	0.0930
2	92.26966	16.2337	4.3059	0.1163
3	97.64751	4.9402	4.5569	0.1231
4	99.27733	1.5176	4.6329	0.1251
5	99.77736	0.4675	4.6563	0.1258
6	99.93135	0.1442	4.6635	0.1260

Carbonair Environmental Services
8640 Monticello Lane
Maple Grove, MN 55369
612-425-2992 800-526-4999
Fax: 612-425-6882

09/06/94
15:11:50

----------STAT 80----------
VERSION 2.3

WATER FLOW RATE: 50.0 gpm
AIR FLOW RATE: 300.0 cfm
WATER TEMPERATURE: 55.0 F
AIR-TO-WATER RATIO: 45:1

Influent Conc. for 1,1-DICHLOROETHENE 170.0 ppb

NO OF TRAY	REMOVAL EFF %	EFF CONC ppb	OFF-GAS CONC ug/l	AIR EMISSION lb/d
1	91.88913	13.7885	3.4714	0.0938
2	99.32938	1.1400	3.7524	0.1014
3	99.94447	0.0944	3.7757	0.1020
4	99.99540	0.0078	3.7776	0.1020
5	99.99962	0.0006	3.7778	0.1020
6	99.99997	0.0001	3.7778	0.1020

Influent Conc. for 1,1-DICHLOROETHANE 160.0 ppb

NO OF TRAY	REMOVAL EFF %	EFF CONC ppb	OFF-GAS CONC ug/l	AIR EMISSION lb/d
1	79.33358	33.0663	2.8207	0.0762
2	95.30556	7.5111	3.3886	0.0915
3	98.91192	1.7409	3.5169	0.0950
4	99.74664	0.4054	3.5465	0.0958
5	99.94094	0.0945	3.5535	0.0960
6	99.98623	0.0220	3.5551	0.0960

Influent Conc. for 1,1,1-TRICHLOROETHANE 72.0 ppb

NO OF TRAY	REMOVAL EFF %	EFF CONC ppb	OFF-GAS CONC ug/l	AIR EMISSION lb/d
1	86.96104	9.3880	1.3914	0.0376
2	98.22816	1.2757	1.5717	0.0425
3	99.75791	0.1743	1.5961	0.0431
4	99.96690	0.0238	1.5995	0.0432
5	99.99547	0.0033	1.5999	0.0432
6	99.99938	0.0004	1.6000	0.0432

Influent Conc. for TETRACHLOROETHENE 2.0 ppb

NO OF TRAY	REMOVAL EFF %	EFF CONC ppb	OFF-GAS CONC ug/l	AIR EMISSION lb/d
1	86.27047	0.2746	0.0383	0.0010
2	98.03850	0.0392	0.0436	0.0012
3	99.71821	0.0056	0.0443	0.0012
4	99.95948	0.0008	0.0444	0.0012
5	99.99417	0.0001	0.0444	0.0012
6	99.99916	0.0000	0.0444	0.0012

Carbonair Environmental Services
8640 Monticello Lane
Maple Grove, MN 55369
612-425-2992 800-526-4999
Fax: 612-425-6882

09/06/94
15:11:50

----------STAT 80----------
VERSION 2.3

WATER FLOW RATE: 50.0 gpm
AIR FLOW RATE: 300.0 cfm
WATER TEMPERATURE: 55.0 F
AIR-TO-WATER RATIO: 45:1

Influent Conc. for BENZENE 170.0 ppb

NO OF TRAY	REMOVAL EFF %	EFF CONC ppb	OFF-GAS CONC ug/l	AIR EMISSION lb/d
1	71.51294	48.4280	2.7016	0.0730
2	90.80993	15.6231	3.4306	0.0927
3	96.92534	5.2269	3.6616	0.0989
4	98.95910	1.7695	3.7385	0.1010
5	99.64622	0.6014	3.7644	0.1017
6	99.87959	0.2047	3.7732	0.1019

Influent Conc. for TOLUENE 880.0 ppb

NO OF TRAY	REMOVAL EFF %	EFF CONC ppb	OFF-GAS CONC ug/l	AIR EMISSION lb/d
1	77.07521	201.7381	15.0725	0.4071
2	94.23555	50.7272	18.4283	0.4978
3	98.51858	13.0365	19.2659	0.5204
4	99.61718	3.3688	19.4807	0.5262
5	99.90093	0.8718	19.5362	0.5277
6	99.97435	0.2257	19.5505	0.5281

Influent Conc. for ETHYLBENZENE 180.0 ppb

NO OF TRAY	REMOVAL EFF %	EFF CONC ppb	OFF-GAS CONC ug/l	AIR EMISSION lb/d
1	79.32013	37.2238	3.1728	0.0857
2	95.39935	8.2812	3.8160	0.1031
3	98.96053	1.8711	3.9584	0.1069
4	99.76433	0.4242	3.9906	0.1078
5	99.94653	0.0963	3.9979	0.1080
6	99.98786	0.0218	3.9995	0.1080

Influent Conc. for XYLENES (TOTAL) 540.0 ppb

NO OF TRAY	REMOVAL EFF %	EFF CONC ppb	OFF-GAS CONC ug/l	AIR EMISSION lb/d
1	66.45484	181.1439	7.9746	0.2154
2	87.35111	68.3040	10.4821	0.2831
3	95.03685	26.8010	11.4044	0.3081
4	98.02305	10.6755	11.7628	0.3177
5	99.20786	4.2775	11.9049	0.3216
6	99.68186	1.7180	11.9618	0.3231

Carbonair Environmental Services
8640 Monticello Lane
Maple Grove, MN 55369
612-425-2992 800-526-4999
Fax: 612-425-6882

09/06/94
15:11:50

----------STAT 80----------
VERSION 2.3

WATER FLOW RATE: 50.0 gpm
AIR FLOW RATE: 300.0 cfm
WATER TEMPERATURE: 55.0 F
AIR-TO-WATER RATIO: 45:1

Influent Conc. for TOTAL VOCs 343384.0 ppb

NO OF TRAY	REMOVAL EFF %	EFF CONC ppb	OFF-GAS CONC ug/l	AIR EMISSION lb/d
1	90.65995	32072.2476	6918.0389	186.8693
2	98.74967	4293.4276	7535.3461	203.5440
3	99.78874	725.4188	7614.6351	205.6857
4	99.95977	138.1292	7627.6860	206.0382
5	99.99168	28.5584	7630.1209	206.1040
6	99.99811	6.4767	7630.6116	206.1173

VAPOR PHASE CARBON MODEL CALCULATIONS

CARBONAIR ENVIRONMENTAL SYSTEMS
8640 MONTICELLO LANE
MAPLE GROVE, MN 55369
PHONE: 612-425-2992
FAX: 612-425-6882

DESIGN COMPOUND	1,2-DCE	
EXPECTED CONC.	1644.	UG/L
MODEL CONC.	2332.	UG/L
TEMPERATURE	90.00	F
OPERATING PRESS	760.0	MM MERCURY
VAPOR PRESSURE	272.9	MM MERCURY
K VALUE	600.1	(UMOLE/GM)(L/UMOLE)**1/N
1/N VALUE	0.3463	(DIMENSIONLESS)
CARBON CAPACITY	18.13	%
AIR FLOW RATE	300.0	CFM
CARBON USAGE	346.4	LB/DAY

CARBONAIR®
ENVIRONMENTAL SYSTEMS

CARBONAIR ENVIRONMENTAL SYSTEMS, INC.
8640 MONTICELLO LANE
MAPLE GROVE, MINNESOTA
55369-4547
612-425-2992 800-526-4999
FAX 612-425-6882

FAX - 2 Pages (including this page)

DATE: 10/13/94

TO: Pete Coots

FROM: Chris Riddle

Please reply to: Carbonair Environmental Services
8640 Monticello Lane
Maple Grove, MN 55369

Phone: 612-425-2992
800-526-4999

FAX: 612-425-6882

Here is the vapor phase emission data you requested. Based upon a 50 gpm flow rate and a total of 450,000 gals to be treated, the time required is 6.2 days. This translates into 2,678,400 cfm of air being treated the carbon system was sized according to these assumptions.

Please call if you need additional information

Fax: 716/271-0251

CARBONAIR ENVIRONMENTAL SYSTEMS, INC.
8840 MONTICELLO LANE
MAPLE GROVE, MINNESOTA
55369-4647
612•425•2992 800•528•4999
FAX 612•425•8882

October 5, 1994

Mr. Pete Coutts
IT Corporation

Re: Proposal Number: 104607B
Project Name: Air stripper rental
Location: Romulus, New York

Dear Mr. Coutts:

Carbonair is pleased to quote products and services for the referenced project. The proposal is based on the information provided. Detailed product specifications are attached.

Executive Summary

Based upon the information provided, we understand the scope of work to be the supply of a ground water treatment system for the referenced site. The system is to be capable of treating up to 50 gpm of contaminated ground water. The equipment is to include a low profile air stripper, followed by vapor phase carbon units for treatment of the off-gas if required. It is our understanding that the equipment is to be rented for a minimum of three months. The pricing below is based upon a three month minimum rental term.

We recommend a Carbonair STAT 80 low profile air stripper with 6 trays to treat the 50 gpm. Attached is a copy of the modeling results showing the expected removal efficiencies and effluent concentrations based upon the influent data provided.

The air stripper may require vapor phase carbon treatment. For this, we recommend an in-line duct heater, to reduce the relative humidity in the vapor stream, and one GPC 48 vapor phase carbon adsorber to treat the off-gas. The GPC 48 will contain 2,500 pounds of vapor phase carbon. We estimate that approximately 346.4 pounds of carbon would be used per day. This estimation assumes 24 hours a day of operation at 50 gpm. This translates into 0.0048 lbs. of carbon per gallon of treated water. Assuming that a total of 450,000 gallons requires treatment, a total of 2,165 pounds of carbon would be used. We recommend that 2,500 lbs. of carbon be supplied, in case higher influent concentrations are encountered.

The following contains additional details on each of the treatment system.

(1) Carbonair STAT 80 low profile air stripper
- SST sump with high level alarm
- 6 trays with spacer, demister, and fasteners
- 7.5 HP, 3 phase, TEFC blower
- mounted on a common skid

(1) Carbonair model GPC 48 vapor phase carbon vessel
- 4' long x 4' wide x 7' high steel vessel
- 2,500 pounds of vapor phase carbon

(1) In-line duct heater
- 5 kW heater

(1) Bag filter housing
- 25 micron filter bag
- 220 gpm capacity

VAPOR PHASE REMOVAL EFFICIENCIES

CARBONAIR

10/13/94

VAPOR PHASE CARBON ADSORPTION MODEL CALCULATIONS

Application: Treatment of Off-Gas from STAT 80 (6 Trays)

Carbon Adsorber(s): One GPC48
Total Mass of Carbon: 2500 lbs
Total Flow Rate: 300 cfm
Adsorber Loading: 6 cfm/sq.ft.
Total Empty Bed Contact Time: 17 sec

Critical Compound: 1,2-DCE
Expected Influent Concentration: 1644 ug/L
Model Influent Concentration: 2332 ug/L
(accounting for the competitive effect of the other compounds)
Effluent Criteria: Non-detectable (< 1 ug/L)

TIME(DAYS)	VOLUME TREATED(CU.FT.)	EFF. CONC./INF. CONC.	EFF. CONC.(UG/L)
1.0	432077.	0.0000	0.0000
2.0	864154.	0.0000	0.0000
3.0	1296231.	0.0000	0.0000
4.0	1728308.	0.0000	0.0000
5.0	2160385.	0.0000	0.0000
6.0	2592462.	0.0000	0.0000
7.0	3024539	0.2412	562.4456
8.0	3456616.	0.9991	2329.9722
9.0	3888693.	0.9990	2329.7006
10.0	4320770.	0.9993	2330.2800
11.0	4752847.	0.9995	2330.8594
12.0	5184924.	0.9997	2331.4000
13.0	5617001.	0.9998	2331.5624
14.0	6049078.	0.9999	2331.7247
15.0	6481155.	1.0000	2331.8871
16.0	6913232.	1.0000	2331.9541
17.0	7345309.	1.0000	2331.9710
18.0	7777386.	1.0000	2331.9878
19.0	8209463.	1.0000	2332.0010
20.0	8641540.	1.0000	2332.0010

GPC Series Gas Phase Carbon Adsorbers

GPC gas phase carbon adsorbers are designed to provide efficient, economical means to control odor, toxic vapors and corrosive gases. Several types of activated carbons are available for a variety of applications. Untreated activated carbons remove organic toxic gases such as trichloroethene, perchloroethene, benzene, toluene, ethylbenzene, xylenes and hydrocarbons. Chemically treated activated carbons remove specific gases such as hydrogen sulfide, sulfur dioxide, nitrogen oxides, halogens, mercury, aldehydes and mercaptans.

Specifications for each model are listed on reverse side.

GPC 3 is ideal for controlling toxic vapor and corrosive gas vented from sources of small volume emission (storage tanks, reactor vessels, sewage treatment plants).

GPC 4 and **8** are designed specifically to control toxic vapor and corrosive gas vented from storage tanks, reactor vessels, sewage treatment plants and other sources of small volume emission. Welded steel construction provides exceptional strength and durability. The units are forklift compatible for trouble-free transportation and quick installation. Interiors are double-coated with a corrosion-resistant epoxy polyamide, ideal for the corrosive and abrasive conditions of gas phase service. Suitable for any gas phase application, including air stripper and soil venting off-gas treatment.

GPC 12, GPC 20 and **GPC 48**'s welded steel construction provides exceptional strength and durability while the skid mounting and forklift compatibility make transportation and installation quick and trouble free. Interior is double coated with a corrosive-resistant epoxy polyamide, ideal for the corrosive and abrasive conditions of gas phase service. Suitable for any gas phase application, including air stripper and soil venting off-gas treatment.

GPC 70 and **GPC 120** are among the largest gas phase carbon adsorbers available. Welded steel construction provides exceptional strength and durability, while the integrated lifting eyes and roll-off truck feature make transportation and installation quick and trouble free. Interior is double coated with a corrosion-resistant epoxy polyamide, ideal for the corrosive and abrasive conditions of gas phase service.

GPC 48

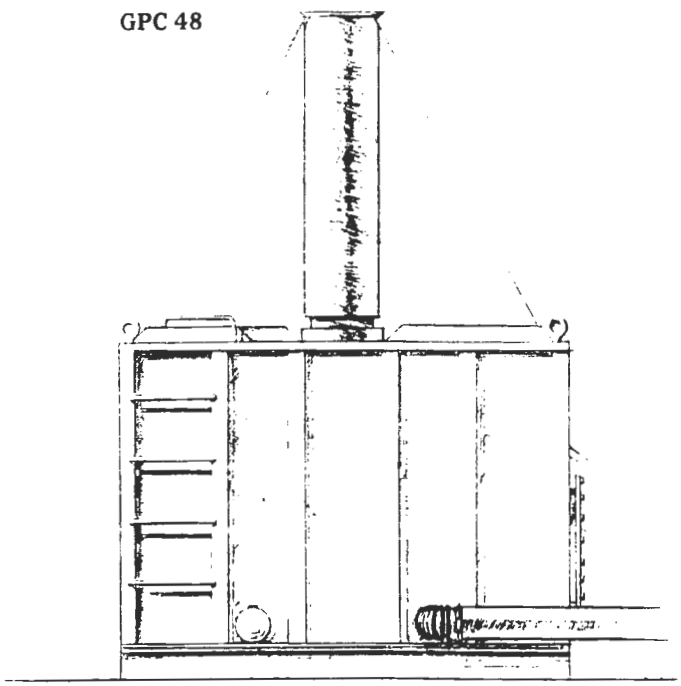

OPTIONS

Materials of construction.
Type of carbon.
Blower(s) and controls.
Humidity control.
Influent/effluent ducting.
Additional sampling couplings and valves.
Discharge stacks.

SPECIFICATIONS

Listed on other side.

Carbon Adsorber–Vapor Phase
GPC 48

NOTE: VESSEL SHOWN WITH ALL CAPS AND COVERS INSTALLED.

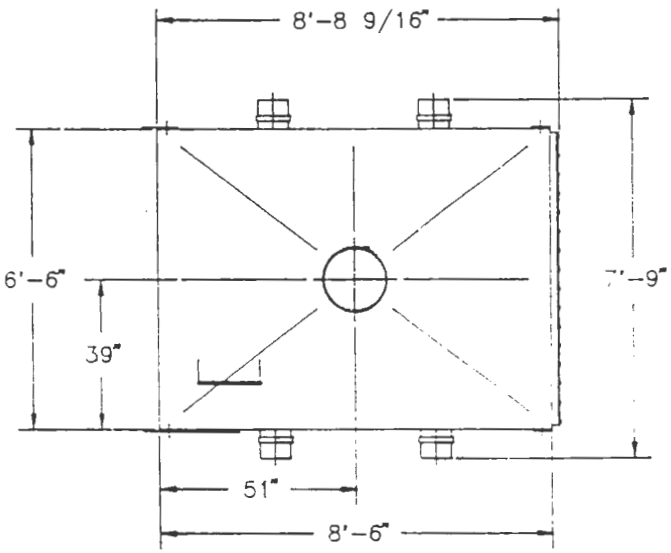

TOP VIEW

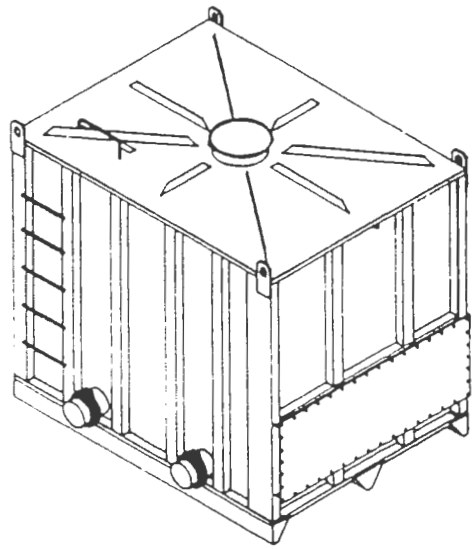

ISO VIEW

(3/4 SCALE)

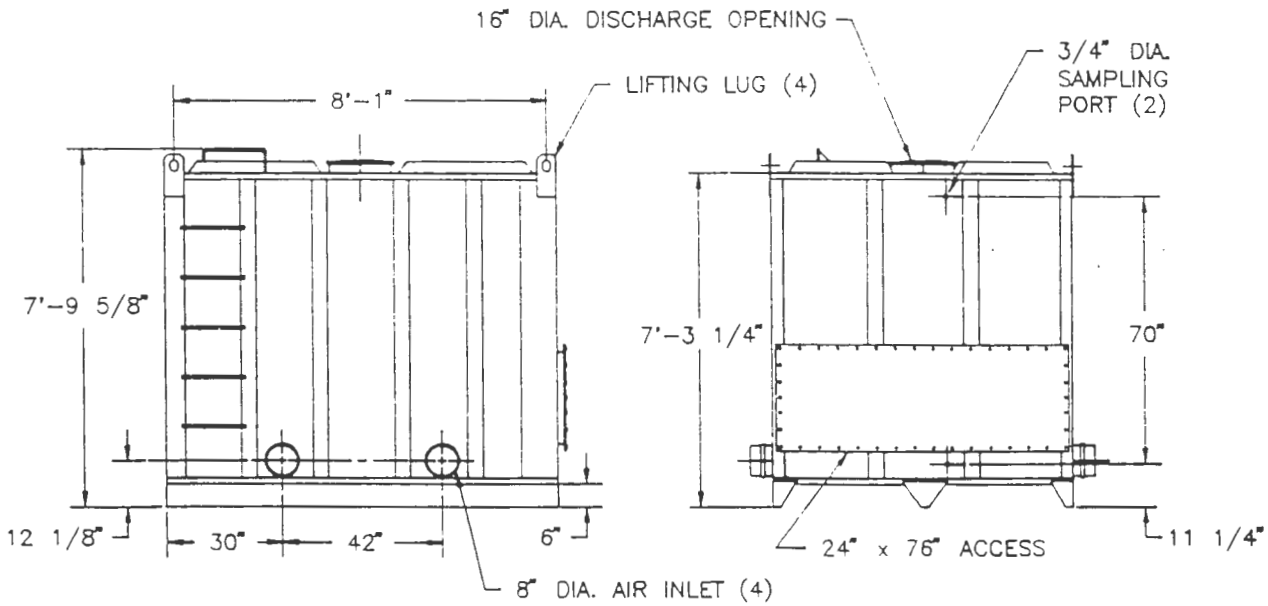

SIDE VIEW

FRONT END VIEW

Sales Drawing #106991
91.08.09
©CARBONAIR 1991

PRESSURE DROP THROUGH CARBONAIR VAPOR–PHASE CARBON UNITS

Based on: CECA 410 GE Carbon
Temperature: 70°F

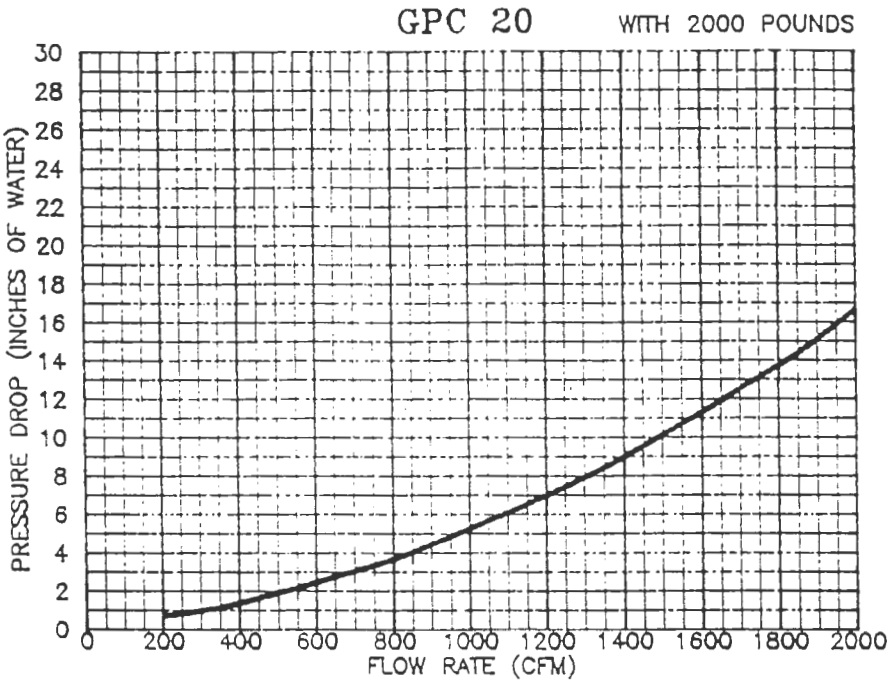

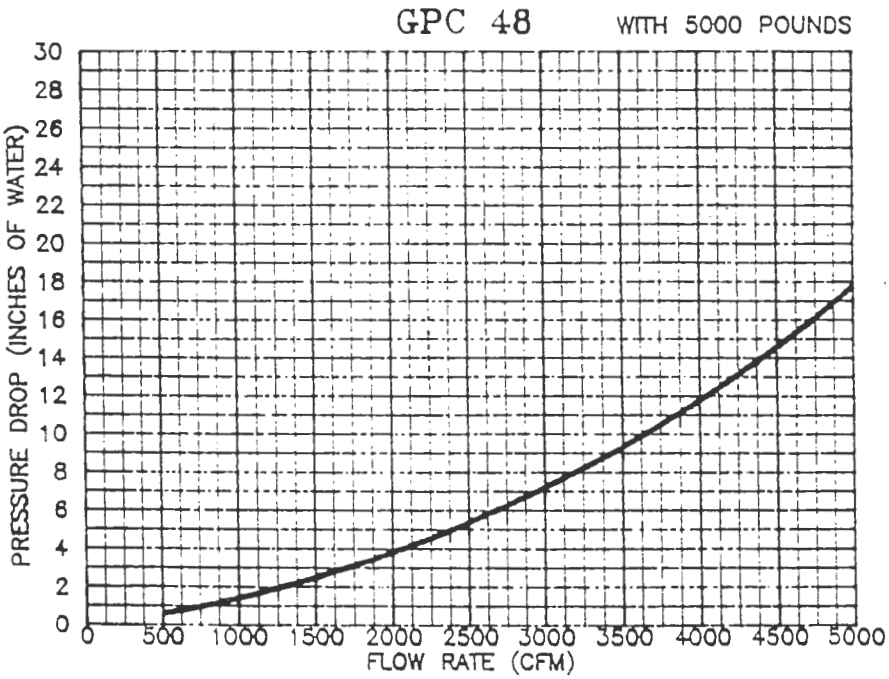

Sales Drawing #117226(03)
93.11.16

©CARBONAIR 1993

INTERNATIONAL TECHNOLOGY CORPORATION

November 2, 1994

Mr. Robert Scott
Permit Administrator
New York State Department of Environmental Conservation
Region 8 Office
6274 East Avon-Lima Road
Avon, New York 14414

Request for Authorization to Construct and Operate Emission Point Sources - Correction

Dear Mr. Scott:

IT Corporation is providing the following correction to the Request for Authorization to Construct and Operate Emission Point Source SEDA01.

The Low Temperature Thermal Desorption unit's (LTTD) primary combustion chamber will operate in the range of 800 to 900° F rather then at a temperature greater than 900° F as previously stated. This correction will not affect possible emissions from the LTTD unit as presented in the original September 28, 1994 submittal.

Please do not hesitate to call me at (716) 271-6430 with any questions regarding the above.

Respectfully Submitted,

IT CORPORATION

Peter W. Coutts
Project Technical Manager

Jeffery D. Korb
Technical Manager - Air

9C:\docs\coutts\scottLN01

October 16, 1994

Mr. Robert Scott
Permit Administrator
New York State
Department of Environmental Conservation
Region 8 Office
6274 East Avon-Lima Road
Avon, New York 14414

Project No. 519200

Mr. Kamal Gupta
Bureau of Eastern Remedial Action
Division of Hazardous Waste Remediation
New York State Department of Environmental Consveration
50 Wolf Road
Albany, New York 12233

Addendum to Request for Authorization to Construct and Operate Emission Point Sources

Dear Mr. Scott:

IT Corporation (IT), on behalf of the U.S. Army Corps of Engineers (USACE), Omaha District and the Seneca Army Depot Activity (SEDA), previously submitted on September 28, 1994 a request for authorization to construct and operate two (2) separate emission point sources as part of a USACE Rapid Response remedial action at the Seneca Army Depot in Romulus, New York. Discussions with Mr. Scott and Mr. Gupta have led IT to forward this addendum to our original documentation. As requested, IT has agreed to utilize vapor-phase carbon control on the air stream from the air stripper system in order to further manage and control volatile organic compound (VOC) emissions resulting from project dewatering operations. Emissions calculations demonstrate that the use of the vapor-phase carbon for this project will effectively reduce the stripper offgas emissions to nondetectable concentrations.

The attached information contains the basic carbon system specifications and operating parameters, and includes modeling data to demonstrate expected emission rates resulting from the units operation during this project. If additional information is required, we will be happy to provide it as needed. Once again, please contact the undersigned at (716) 271-6430 if you have any questions or comments. IT wishes to thank you ahead of time and appreciates your prompt and timely response to this issue.

Respectfully Submitted,

IT CORPORATION

Jeffrey D. Korb
Technical Manager- Air

Peter W. Coutts
Project Technical Manager

JDK:PWC:jk
Attachments

cc: Mr. Andrew Winslow- U.S. Army Corps of Engineers, Omaha District
Mr. Randall Battaglia- U.S. Army, Seneca Army Depot
Mr. Douglas Wehner- IT Corporation

INTERNATIONAL TECHNOLOGY CORPORATION

November 2, 1994

Mr. Robert Scott
Permit Administrator
New York State Department of Environmental Conservation
Region 8 Office
6274 East Avon-Lima Road
Avon, New York 14414

Request for Authorization to Construct and Operate Emission Point Sources - Correction

Dear Mr. Scott:

IT Corporation is providing the following correction to the Request for Authorization to Construct and Operate Emission Point Source SEDA01.

The Low Temperature Thermal Desorption unit's (LTTD) primary combustion chamber will operate in the range of 800 to 900° F rather then at a temperature greater than 900° F as previously stated. This correction will not affect possible emissions from the LTTD unit as presented in the original September 28, 1994 submittal.

Please do not hesitate to call me at (716) 271-6430 with any questions regarding the above.

Respectfully Submitted,

IT CORPORATION

Peter W. Coutts
Project Technical Manager

Jeffery D. Korb
Technical Manager - Air

9C:\docs\coutts\scott.N01

HEAT, FLAME-PRODUCING DEVICE AND/OR HAZARDOUS WORK PERMIT

PERMIT #94-59 ISSUED TO FER Tech Environmental, Inc VALID FROM 5 Oct 94 THRU 31 Dec 94

PURPOSE: To operate two hawk burners, oxy-acetylene torch and lincoln welder to install and maintain incinerator, 2 generators, gas powered pressure washer, two diesel fired heaters and an impact crusher at the ash landfill site.

Also to install, use and refill two propane tanks (21,000 gals) at landfill site

OPERATING EMPLOYEE AS ASSIGNED SUPERVISOR ROBERT LACHOWSKI/GARY GREENWALT

FIRE EXTINGUISHER REQUIRED: CO2 or Dry Chemical

REQUIREMENTS:

(X) Prior to commencement of work, the person(s) named on the permit will contact the foreman of the building or area in which the work is to be done.

(X) All explosives will be removed from the immediate vicinity of job site.

(X) No gasoline-operated equipment will be used nearer than 50 feet or refueled closer than 100 feet of an explosive location or operation. Refueling will be done with an approved-type safety can.

(X) All portable electric equipment will be properly grounded.

(X) Where open-flame operations are conducted, all combustible material where practicable will be removed from the site of the operation or will be protected with flame-resistant covering.

(X) Authorized to carry matches, spark-producing or heat-producing device to and from work site in Restricted Area.

(X) Matches, spark or heat-producing devices will be removed from the area or turned in to: _____ at the end of the work day.

(X) Operator of oxy-acetylene welding equipment will wear fire-resistant gauntlets and aprons.

REMARKS:

APPROVED: _____ _____ For John T. Cole Chief Symonds

SAFETY MANAGER DIR/QUALITY ASSURANCE FIRE CHIEF

ON EXPIRATION OF PERMIT OR COMPLETION OF THE JOB, PERMIT WILL BE TURNED IN TO THE OFFICE OF THE INITIATOR, OR TO THE GUARD ON DUTY AT POST. ANY VIOLATION OF THE REQUIREMENTS OF THIS PERMIT WILL BE JUSTIFICATION FOR STOPPING THE OPERATION UNTIL THE REQUIREMENTS ARE COMPLIED WITH.

"IN CASE OF SERIOUS ACCIDENT OR FIRE - DIAL 117"

SDSSE-LS Form 253, 1 Mar 87

ATTACHMENT 4

LOCKOUT/TAGOUT FOR ELECTRICAL EQUIPMENT

Job: SEAD

Device: Screen, Slinger, Dust Screw # 1

Location: LTTW

Authorized Person: Wayne Rawlinson

PREPARATION FOR SHUTDOWN

1. Determine power type and shutoff location
2. Determine if there is more than one energy source
3. Determine magnitude of power (voltage)
4. Notify affected employees in the area that equipment will be under lockout for maintenance.
5. Shutoff power sources to machine.

LOCKOUT/TAGOUT

6. Lock and tag main power switches in the OFF position, remove fuses.
7. Verify that no power is available to the equipment using a voltmeter, if necessary.
8. Drain devices such as capacitor banks.
9. Verify that these devices have no stored energy by use of the voltmeter.
10. Repair equipment.

RETURN TO SERVICE

11. Be sure all connections are made and any unused tools and equipment are removed.
12. Remove lock if necessary to verify machine is repaired. The maintenance employee, while verifying the machine is repaired cannot leave the immediate area.
13. Remove tag from machine.
14. Notify employees in the area that the equipment is available.

Authorized Person:

Site Supervisor:

IT Corporation is a wholly owned subsidiary of International Technology Corporation

ATTACHMENT 4

LOCKOUT/TAGOUT FOR ELECTRICAL EQUIPMENT

Job: 519200-

Device: ATD- 0710

Location: Slinger

Authorized Person: Teri Oborn

PREPARATION FOR SHUTDOWN

1. Determine power type and shutoff location
2. Determine if there is more than one energy source
3. Determine magnitude of power (voltage)
4. Notify affected employees in the area that equipment will be under lockout for maintenance.
5. Shutoff power sources to machine.

LOCKOUT/TAGOUT

6. Lock and tag main power switches in the OFF position, remove fuses.
7. Verify that no power is available to the equipment using a voltmeter, if necessary.
8. Drain devices such as capacitor banks.
9. Verify that these devices have no stored energy by use of the voltmeter.
10. Repair equipment.

RETURN TO SERVICE

11. Be sure all connections are made and any unused tools and equipment are removed.
12. Remove lock if necessary to verify machine is repaired. The maintenance employee, while verifying the machine is repaired cannot leave the immediate area.
13. Remove tag from machine.
14. Notify employees in the area that the equipment is available.

Authorized Person: Teri Oborn

Site Supervisor:

2-78

ATTACHMENT 4

LOCKOUT/TAGOUT FOR ELECTRICAL EQUIPMENT

Job: _____

Device: _____

Location: _____

Authorized Person: _____

PREPARATION FOR SHUTDOWN

1. Determine power type and shutoff location
2. Determine if there is more than one energy source
3. Determine magnitude of power (voltage)
4. Notify affected employees in the area that equipment will be under lockout for maintenance.
5. Shutoff power sources to machine.

LOCKOUT/TAGOUT

6. Lock and tag main power switches in the OFF position, remove fuses.
7. Verify that no power is available to the equipment using a voltmeter, if necessary.
8. Drain devices such as capacitor banks.
9. Verify that these devices have no stored energy by use of the voltmeter.
10. Repair equipment.

RETURN TO SERVICE

11. Be sure all connections are made and any unused tools and equipment are removed.
12. Remove lock if necessary to verify machine is repaired. The maintenance employee, while verifying the machine is repaired cannot leave the immediate area.
13. Remove tag from machine.
14. Notify employees in the area that the equipment is available.

Authorized Person:

Site Supervisor:

IT Corporation is a wholly owned subsidiary of International Technology Corporation

HEAT, FLAME-PRODUCING DEVICE AND/OR HAZARDOUS WORK PERMIT

PERMIT # 94-59 ISSUED TO Suburban Propane VALID FROM 5 Oct 94 THRU 31 Dec 94

PURPOSE: To transport propane to the ash landfill site and to fill the propane tanks located at the site.

OPERATING EMPLOYEE As Assigned SUPERVISOR Robert Lachowski

FIRE EXTINGUISHER REQUIRED: CO2 or Dry Chemical

REQUIREMENTS:

(XX) Prior to commencement of work, the person(s) named on the permit will contact the foreman of the building or area in which the work is to be done.

( ) All explosives will be removed from the immediate vicinity of job site.

( ) No gasoline-operated equipment will be used nearer than 50 feet or refueled closer than 100 feet of an explosive location or operation. Refueling will be done with an approved-type safety can.

( ) All portable electric equipment will be properly grounded.

( ) Where open-flame operations are conducted, all combustible material where practicable will be removed from the site of the operation or will be protected with flame-resistant covering.

( ) Authorized to carry matches, spark-producing or heat-producing device to and from work site in Restricted Area.

( ) Matches, spark or heat-producing devices will be removed from the area or turned in to: _____ at the end of the work day.

( ) Operator of oxy-acetylene welding equipment will wear fire-resistant gauntlets and aprons.

REMARKS:

APPROVED: [signature] SAFETY MANAGER [signature] for DIR/QUALITY ASSURANCE [signature] for FIRE CHIEF

ON EXPIRATION OF PERMIT OR COMPLETION OF THE JOB, PERMIT WILL BE TURNED IN TO THE OFFICE OF THE INITIATOR, OR TO THE GUARD ON DUTY AT POST. ANY VIOLATION OF THE REQUIREMENTS OF THIS PERMIT WILL BE JUSTIFICATION FOR STOPPING THE OPERATION UNTIL THE REQUIREMENTS ARE COMPLIED WITH.

"IN CASE OF SERIOUS ACCIDENT OR FIRE - DIAL 117"

SDSSE-LS Form 253, 1 Mar 87

HEAT, FLAME-PRODUCING DEVICE AND/OR HAZARDOUS WORK PERMIT

PERMIT # 94-59 ISSUED TO Suburban Propane VALID FROM 5 Oct 94 THRU 31 Dec 94

PURPOSE: To transport propane to the ash landfill site and to fill the propane tanks located at the site.

OPERATING EMPLOYEE As Assigned SUPERVISOR Robert Lachowski

FIRE EXTINGUISHER REQUIRED: CO2 or Dry Chemical

REQUIREMENTS:

(XX) Prior to commencement of work, the person(s) named on the permit will contact the foreman of the building or area in which the work is to be done.

( ) All explosives will be removed from the immediate vicinity of job site.

( ) No gasoline-operated equipment will be used nearer than 50 feet or refueled closer than 100 feet of an explosive location or operation. Refueling will be done with an approved-type safety can.

( ) All portable electric equipment will be properly grounded.

( ) Where open-flame operations are conducted, all combustible material where practicable will be removed from the site of the operation or will be protected with flame-resistant covering.

( ) Authorized to carry matches, spark-producing or heat-producing device to and from work site in Restricted Area.

( ) Matches, spark or heat-producing devices will be removed from the area or turned in to: _____ at the end of the work day.

( ) Operator of oxy-acetylene welding equipment will wear fire-resistant gauntlets and aprons.

REMARKS:

APPROVED: SAFETY MANAGER | For DIR/QUALITY ASSURANCE | For FIRE CHIEF

ON EXPIRATION OF PERMIT OR COMPLETION OF THE JOB, PERMIT WILL BE TURNED IN TO THE OFFICE OF THE INITIATOR, OR TO THE GUARD ON DUTY AT POST. ANY VIOLATION OF THE REQUIREMENTS OF THIS PERMIT WILL BE JUSTIFICATION FOR STOPPING THE OPERATION UNTIL THE REQUIREMENTS ARE COMPLIED WITH.

"IN CASE OF SERIOUS ACCIDENT OR FIRE - DIAL 117"

SDSSE-LS Form 253, 1 Mar 87

HEAT, FLAME-PRODUCING DEVICE AND/OR HAZARDOUS WORK PERMIT

PERMIT #94-58 ISSUED TO IT Corporation VALID FROM 5 Oct 94 THRU 31 Dec 94

PURPOSE: To authorize smoking in a designated location at the ash landfill.

OPERATING EMPLOYEE As Assigned SUPERVISOR Martin Freedman

FIRE EXTINGUISHER REQUIRED: CO2 or Dry Chemical

REQUIREMENTS:

(x) Prior to commencement of work, the person(s) named on the permit will contact the foreman of the building or area in which the work is to be done.

( ) All explosives will be removed from the immediate vicinity of job site.

( ) No gasoline-operated equipment will be used nearer than 50 feet or refueled closer than 100 feet of an explosive location or operation. Refueling will be done with an approved-type safety can.

( ) All portable electric equipment will be properly grounded.

(x) Where open-flame operations are conducted, all combustible material where practicable will be removed from the site of the operation or will be protected with flame-resistant covering.

(x) Authorized to carry matches, spark-producing or heat-producing device to and from work site in Restricted Area.

(x) Matches, spark or heat-producing devices will be removed from the area or turned in to: _____ at the end of the work day.

( ) Operator of oxy-acetylene welding equipment will wear fire-resistant gauntlets and aprons.

REMARKS:

APPROVED: _____ for _____ for _____
SAFETY MANAGER DIR/QUALITY ASSURANCE FIRE CHIEF

ON EXPIRATION OF PERMIT OR COMPLETION OF THE JOB, PERMIT WILL BE TURNED IN TO THE OFFICE OF THE INITIATOR, OR TO THE GUARD ON DUTY AT POST. ANY VIOLATION OF THE REQUIREMENTS OF THIS PERMIT WILL BE JUSTIFICATION FOR STOPPING THE OPERATION UNTIL THE REQUIREMENTS ARE COMPLIED WITH.

"IN CASE OF SERIOUS ACCIDENT OR FIRE - DIAL 117"

SDSSE-LS Form 253, 1 Mar 87

INTERNATIONAL TECHNOLOGY CORPORATION

HOT WORK PERMIT

Permit for 1 Day Only

Operating Area: Equipment Decon — Good for this date only: 11/2 19 94

Specific vessel or equipment: Rubber Tired Loader

Work to be done: Decontamination of Loader using hot water pressure washer

TESTS

STATE EXACT LOCATION OF TEST	TIME	PERCENT LOWER EXPLOSION LIMIT	PERCENT OXYGEN	OTHERS			INITIAL
Decon Pad	1015	21%	4.4				MF

CHECK LIST

	Initial: Yes	Initial: Does Not Apply
Operations/plant personnel have been informed of work to be performed	MF	
All tanks/lines/valves are disconnected, blinded, or locked out.		MF
Equipment and all attached piping has been cleaned and purged with: (check blank) Water ____ Steam ____ Inert gas ____ Air ____		MF
Electrical service has been locked out and tagged.		MF
All grounding/bonding wire in place.		MF
Surrounding equipment and operations are safe for hot work.	MF	
No open vessels or lines within 35 feet of hot work area.		MF
No combustible items within 35 feet of hot work area or covered with wetted tarpaulins.		MF
Fire Watch has been provided by Contractor.	MF	
No flammable gases greater than 10% LEL in hot work area.		MF
All requirements of ITCPRO 9531 for Confined Space Entry have been met and ITC Form 9531-1 has been completed and posted.		MF
If vessel contains leaded product, all requirements of ITCPRO 9531.3 have been met.		MF

PERSONNEL PROTECTIVE EQUIPMENT

EYES
- ☐ Chemical Goggles
- ☐ Face Shield
- ☑ Safety Glasses
- ☐ Welders Mask

BODY
- ☐ Environmental Suit: ☐ PVC ☐ Butyl
- ☐ Heavy Suit: ☐ PVC ☐ Neoprene
- ☐ Light PVC Suit
- ☐ Yellow Tyvek Suit
- ☐ White Tyvek Suit

EXTREMITIES
- ☑ Hard Hat
- ☑ Gloves
- ☑ Boots ☐ PVC ☐ Neoprene
- ☑ Hoods ☐ PVC ☐ Neoprene
- ☑ Foot Coverings Disposable

RESPIRATORY
- ☐ Self-Contained Respirator
- ☐ Hose Line Respirator
- ☐ Hose Line W/ Egress
- ☑ Cartridge Respirator

Cartridge Type ____
- ☐ Dust Respirator

EQUIPMENT REQUIRED
- ☑ Fire Extinguisher
- ☐ Fire Blanket
- ☐ Charged Water Hose
- ☐ Combustible Gas Indicator

Special Instructions: Fire watch — make equipment shut down prior to pressing

Completed by: MARTIN FREEDMAN (Name Printed) — Martin Freedman (Signature) — 11/2/94 (Date)

Hot work completion time: ____ Manager: ____

ITC FORM 9571-1
CS/103-5-85

195-1-8

REQUEST FOR ISSUE OR TURN-IN

✓ ISSUE / TURN-IN	SHEET NO	NO OF SHEETS	5. REQUEST NUMBER
1. FROM: SECURITY. POLICE BIDE #103	6. DATE MATERIEL REQUIRED: 10-13-94		7. PRIORITY
2. TO: ANDREW. JOHNSON- 14259	8. VOUCHER NUMBER	9. POSTED	DATE / BY / DATE / BY
3. ACCOUNTING AND FUNDING DATA			

4. END ITEM IDENTIFICATION	a. NAME AND MANUFACTURER	b. MODEL	c. SERIAL NUMBER	d. PUBLICATION

ITEM NO a	STOCK NUMBER, DESCRIPTION, AND CODING OF MATERIEL AND/OR SERVICES b	* CODE c	UNIT OF ISSUE d	QUANTITY e	SUPPLY ACTION f	UNIT PRICE g	TOTAL COST h
1	MOTOROLA RADIO # 162/29 w/						
	CASE- FD 23.						
	NOTHING FOLLOWS.						
						SHEET TOTAL	
						GRAND TOTAL	

* ISSUE—I-Initial; R—Replacement TURN-IN—U-Unserviceable; S-Serviceable

10. ISSUE OR TURN IN OF QUANTITIES IN "QUANTITY" COLUMN IS REQUESTED	DATE	BY	11. RECEIVED QUANTITIES IN "SUPPLY ACTION" COLUMN	DATE	BY
	10-13/94	Michael Dunphy		10-13-94	Andrew Johnson

DD FORM 1 OCT 87 1150 REPLACES F OF 1 JUL 86 WHICH MAY BE USED

SDSTO-SEI-S (380) 28 Sep 94

MEMORANDUM FOR SEE DISTRIBUTION

SUBJECT: Photographic Authorization No. 20-94

1. Reference is made to SEADR 380-20.

2. By virtue of this authorization IT Corp. Employees: Martin Freedman and/or Robert Rushing
Rank/Name/Organization
is authorized to take photographs on Seneca Army Depot Activity (SEDA).

a. Applicable areas: Ash Landfill Site

b. Applicable items/subjects: Environmental clean-up activities

c. Purpose: Environmental clean-up

3. The following equipment will be used:

a. Camera: Minolta (Make) Maxxum 7000 (Model) 17225620 (Serial No.)

b. Other:

4. Above named individual must understand the following conditions apply (those checked):

a. |X| This authorization is valid only for the period 28 Sep 94 to 31 Jan 95.

b. |X| This authorization is valid only for the areas, items and purpose stated in paragraph 2.

c. |X| Classified information or material may not appear in any photographs taken.

d. |X| Sensitive information or material may not appear in any photographs taken. Of particular concern are interior/exterior photographs of sensitive structures and security measures in force (i.e. locks, fences, gates, guard posts, etc.)

Seneca Army Depot Activity Digging Permit Memorandum

FROM: ANDREW JOHNSON / ITCORP DATE: 12OCT94

For M&R: Shop Supervisor
For Utilities: Shop Supervisor
For Planner Estimator
For Contracts: COR, Contractor of Designer as appropriate

SUBJECT: Request Excavation Clearance to Accomplish the Following: _____

EXCAVATION OF ASH LANDFILL

A drawing is _____ is not X included.

This clearance is required by 14OCT94 (Date).

The contract, MSO, IJO or PR # is DACW45-90-D-0002 D.O. 93

Please handle this clearance request as a:

_____ Priority #1: This is an emergency situation that requires a hand carry till completion of the permit.

X Priority #2: This is an urgent situation that requires this this permit be available by the due date above.

_____ Priority #3: This is a routine situation and the permit should be available no later than one week after the due date above. (This is an inappropriate priority if the permit is needed in less than seven (7) calendar days.)

Completion of this permit requires action or coordination with the offices listed below. Their action shall be stake out or clearance of utility systems, environmental review and record keeping.

THRU: PWC Br; C, O&M Office - Log number assigned 177 and 10/13/94. (date)

PWC Branch, Utilities Section was given this permit on _____. (date)

a. Stake out was completed 10/13/94 (date) and certified by DICK STEWART. For further info or excavation clearance problems, please call GEORGE SHADMAN at 41-470. (phone)

OR

b. _____ of Utilities Section stated no stake out was required _____. (Date)

Seneca Army Depot Activity Digging Permit Memorandum (cont'd)

PWC Br; C, Engineering/Environmental Mgt Section: 10/13/94 MJS
(date)
received and environmental review was completed 10/13/94 MJS.
(date)

PWC Br; C, O&M Office: Log out as complete and deliver to requester 10/13/94.
(Date)

TO: Andrew Johnson
(Requester)

1. Excavation clearance complete and returned.

Received on 13OCT94 Andrew Johnson.
(Date) (Requester Representative)

2. This completed permit must be in the possession of the requesting organization with a copy furnished to the equipment operator who will be actually performing the excavation described above.

3. Decisions regarding after duty hour emergency digging by the Seneca Public Works Center Branch staff will be made by the senior PWC person on the scene of the emergency utilizing the best information he/she has available at the time.

4. OPERATOR: YOU MUST STILL EXERCISE CARE AND JUDGMENT WHEN DIGGING. EVEN THOUGH RECORDS MAY SHOW IT IS OKAY TO EXCAVATE, ACTUAL UNDERGROUND CONDITIONS CAN NEVER BE ABSOLUTELY PREDICTED. STOP EXCAVATION IF YOU ENCOUNTER THE UNEXPECTED SUCH AS WIRES, UTILITY LINES, ANY KIND OF AMMUNITION, TANKS, BARRELS, DISCOLORED EARTH, A STRANGE OR CHEMICAL SMELL, ARTIFACTS SUCH AS BONES, ARROWHEADS OR POTTERY PIECES, OR UNEXPECTED LIQUIDS, ESPECIALLY IF THEY ARE NOT WATER, OR ANY OTHER UNEXPECTED SITUATION.

Stephen M. Absolom
STEPHEN M. ABSOLOM
Facilities Engineer

TECHNOLOGY CORPORATION

HOT WORK PERMIT

Operating Area: BAG HOUSE STACK UNIT Good for this date only: 10/26 19 94

Specific vessel or equipment: STACK UNIT Sampling PORTS

Work to be done: WELD MONORAIL TO STACK UNIT

TESTS

STATE EXACT LOCATION OF TEST	TIME	PERCENT LOWER EXPLOSION LIMIT	PERCENT OXYGEN	OTHERS		INITIAL
LOW AREA UNDER STACK UNIT	0923	0	21.1	—	—	RLB
UP WIND GROUND LEVEL	0925	0	21.1	—	—	RLB
STACK BASE	0930	0	21.1	—	—	RLB
Stack Ports	1030	0	21.0	—	—	BLG

CHECK LIST

	Initial: Yes	Initial: Does Not Apply
Operations/plant personnel have been informed of work to be performed	RLB	
Tanks/lines/valves are disconnected, blinded, or locked out.	RLB	
Equipment and all attached piping has been cleaned and purged with: (check blank) Water ____ Steam ____ Inert gas ____ Air ____		RLB
Electrical service has been locked out and tagged.		RLB
All grounding/bonding wire in place.	RLB	
Surrounding equipment and operations are safe for hot work.	RLB	
No open vessels or lines within 35 feet of hot work area.	RLB	
No combustible items within 35 feet of hot work area or covered with wetted tarpaulins.	RLB	
Fire Watch has been provided by Contractor.	RLB	
No flammable gases greater than 10% LEL in hot work area.	RLB	
All requirements of ITCPRO 9531 for Confined Space Entry have been met and ITC Form 9531-1 has been completed and posted.		RLB
If vessel contains leaded product, all requirements of ITCPRO 9531.3 have been met.		

PERSONNEL PROTECTIVE EQUIPMENT

EYES
- ☐ Chemical Goggles
- ☐ Face Shield
- ☐ Safety Glasses
- ☒ Welders Mask

BODY
- ☐ Environmental Suit: ☐ PVC ☐ Butyl
- ☐ Heavy Suit: ☐ PVC ☐ Neoprene
- ☐ Light PVC Suit
- ☐ Yellow Tyvek Suit
- ☐ White Tyvek Suit — WELDERS JACKET

EXTREMITIES
- ☒ Hard Hat
- ☒ Gloves
- ☒ Boots ☐ PVC ☐ Neoprene
- ☐ Hoods ☐ PVC ☐ Neoprene
- ☐ Foot Coverings, Disposable

RESPIRATORY
- ☐ Self-Contained Respirator
- ☐ Hose Line Respirator
- ☐ Hose Line W/Egress
- ☐ Cartridge Respirator
- Cartridge Type ____
- ☐ Dust Respirator

EQUIPMENT REQUIRED
- ☒ Fire Extinguisher
- ☐ Fire Blanket
- ☐ Charged Water Hose
- ☒ Combustible Gas Indicator

Special Instructions: FIRE WATCH WILL ALSO SERVE AS SPOTTER for MANLIFT OPERATIONS. NO PERSONNEL WILL be PERMITTED to WORK IN AREA BELOW HOT WORK ACTIVITIES

Completed by: BOB BEACER (Name Printed) Bob B (Signature) 10/26/94 (Date)

Manager

ITC FORM 9571-1
CS/103-5-85

TIME OF HOT WORK COMPLETION: 1110 BLG

INTERNATIONAL TECHNOLOGY CORPORATION

HOT WORK PERMIT

Operating Area: Water line off Ash Landfill B Good for this date only: 11/11 19 94

Specific vessel or equipment: Water line

Work to be done: by Jerry Ditzell / Ditzell Const

Cut water pipe and blind off

TESTS

STATE EXACT LOCATION OF TEST	TIME	PERCENT LOWER EXPLOSION LIMIT	PERCENT OXYGEN	OTHERS HNU	OTHERS	INITIAL
N. of old incinerator - 6 ft deep excavation	1054	0	21	3.0		JG
"	1130	0	20.7	3.7		JG

CHECK LIST

	Initial: Yes	Initial: Does Not Apply
Operations/plant personnel have been informed of work to be performed		JG
Tanks/lines/valves are disconnected, blinded, or locked out.		JG
Equipment and all attached piping has been cleaned and purged with: (check blank) Water X Steam ___ Inert gas ___ Air ___	JG	
Electrical service has been locked out and tagged.		JG
All grounding/bonding wire in place.		JG
Surrounding equipment and operations are safe for hot work.	JG	
No open vessels or lines within 35 feet of hot work area.	JG	
No combustible items within 35 feet of hot work area or covered with wetted tarpaulins.	JG	
Fire Watch has been provided by Contractor.	JG	
No flammable gases greater than 10% LEL in hot work area.	JG	
All requirements of ITCPRO 9531 for Confined Space Entry have been met and ITC Form 9531-1 has been completed and posted.	JG	
If vessel contains leaded product, all requirements of ITCPRO 9531.3 have been met.		JG

PERSONNEL PROTECTIVE EQUIPMENT

EYES
- ☐ Chemical Goggles
- ☐ Face Shield
- ☒ Safety Glasses
- ☐ Welders Mask

BODY
- ☐ Environmental Suit: ☐ PVC ☐ Butyl
- ☐ Heavy Suit: ☐ PVC ☐ Neoprene
- ☐ Light PVC Suit
- ☐ Yellow Tyvek Suit
- ☐ White Tyvek Suit

EXTREMITIES
- ☐ Hard Hat
- ☐ Gloves
- ☒ Boots ☒ PVC ☐ Neoprene
- ☐ Hoods ☐ PVC ☐ Neoprene
- ☐ Foot Coverings, Disposable

RESPIRATORY
- ☐ Self-Contained Respirator
- ☐ Hose Line Respirator
- ☐ Hose Line W/Egress
- ☐ Cartridge Respirator

Cartridge Type ___
- ☐ Dust Respirator

EQUIPMENT REQUIRED
- ☒ Fire Extinguisher
- ☐ Fire Blanket
- ☐ Charged Water Hose
- ☐ Combustible Gas Indicator

Special Instructions: HNU w/10.2eV 11.7eV probe + O_2/LEL readings taken in excavation show insignificant atmospheric hazards: i.e., 0% LEL, 21% O_2 0.0 ppm w/ HNU

Completed by: JEFF GOUGHERTY (Name Printed) Jeff Gougherty (Signature) 11-11-94 (Date)

Manager

ITC FORM 9571-1
CS/103-5-85

195-1-

INTERNATIONAL TECHNOLOGY CORPORATION

HOT WORK PERMIT

erating Area Traffic entrance area Good for this date only 11/15 19 94

Specific vessel or equipment 966 loader ladder

Work to be done Weld + Torch cut ladder to 966 cab

TESTS

STATE EXACT LOCATION OF TEST	TIME	PERCENT LOWER EXPLOSION LIMIT	PERCENT OXYGEN	OTHERS		INITIAL
At loader ~~loader~~ ladder of 966	0950	0%	21%			JOB

CHECK LIST

	Initial: Yes	Initial: Does Not Apply
Operations/plant personnel have been informed of work to be performed	JOB	
inks/lines/valves are disconnected, blinded, or locked out.	JOB	
Equipment and all attached piping has been cleaned and purged with: (check blank) Water JOB Steam ____ Inert gas ____ Air ____	Pressure washed JOB	JOB
Electrical service has been locked out and tagged.		JOB
All grounding/bonding wire in place.		JOB
Surrounding equipment and operations are safe for hot work.	JOB	
No open vessels or lines within 35 feet of hot work area.	JOB	
No combustible items within 35 feet of hot work area or covered with wetted tarpaulins.	JOB	
Fire Watch has been provided by Contractor.	JOB	
No flammable gases greater than 10% LEL in hot work area.	JOB	
All requirements of ITCPRO 9531 for Confined Space Entry have been met and ITC Form 9531-1 has been completed and posted.		JOB
If vessel contains leaded product, all requirements of ITCPRO 9531.3 have been met.		JOB

PERSONNEL PROTECTIVE EQUIPMENT

EYES
- ☐ Chemical Goggles
- ☐ Face Shield
- ☒ Safety Glasses
- ☐ Welders Mask

BODY
- ☐ Environmental Suit: ☐ PVC ☐ Butyl
- ☐ Heavy Suit: ☐ PVC ☐ Neoprene
- ☐ Light PVC Suit
- ☐ Yellow Tyvek Suit
- ☒ White Tyvek Suit

EXTREMITIES
- ☒ Hard Hat
- ☒ Gloves
- ☒ Boots ☐ PVC ☐ Neoprene
- ☐ Hoods ☐ PVC ☐ Neoprene
- ☐ Foot Coverings, Disposable

RESPIRATORY
- ☐ Self-Contained Respirator
- ☐ Hose Line Respirator
- ☐ Hose Line W/Egress
- ☐ Cartridge Respirator

Cartridge Type ____
- ☐ Dust Respirator

EQUIPMENT REQUIRED
- ☒ Fire Extinguisher
- ☐ Fire Blanket
- ☐ Charged Water Hose
- ☒ Combustible Gas Indicator

Special Instructions: An IT worker will be accompanying this work as it continues. This area has been delineated as a CRZ - concurred with Warren Housemon to downgrade. The loader has been certified by JEFF GOUGHERTY as clean in the area where work will be performed. Fire extinguishers will be present.

Completed by: JEFF GOUGHERTY (Name Printed) Jeff Gougherty (Signature) 11-15-94 (Date)

Manager

ITC FORM 9571-1
CS/103-5-85

195-

TECHNOLOGY CORPORATION

HOT WORK PERMIT

rating Area Ash Landfill - Area B Good for this date only 11/18 19 94

Specific vessel or equipment water main running through area B - capped already

Work to be done cutting water pipe for demolition - de-activated pipe

TESTS

STATE EXACT LOCATION OF TEST	TIME	PERCENT LOWER EXPLOSION LIMIT	PERCENT OXYGEN	OTHERS		INITIAL
Tests will run continous for combustibles	1600	0	21			DL
while cutting is ongoing. Area B of ash	1615	0	21			JTG
landfill.						

CHECK LIST

	Initial: Yes	Initial: Does Not Apply
Operations/plant personnel have been informed of work to be performed.		JTG
A[illegible]nks/lines/valves are disconnected, blinded, or locked out.	JTG	
Equipment and all attached piping has been cleaned and purged with: (check blank) Water___ Steam___ Inert gas___ Air___	JTG	
Electrical service has been locked out and tagged.		JTG
All grounding/bonding wire in place.		JTG
Surrounding equipment and operations are safe for hot work.	JTG	
No open vessels or lines within 35 feet of hot work area.	JTG	
No combustible items within 35 feet of hot work area or covered with wetted tarpaulins.	JTG	
Fire Watch has been provided by Contractor.	JTG	
No flammable gases greater than 10% LEL in hot work area.	JTG	
All requirements of ITCPRO 9531 for Confined Space Entry have been met and ITC Form 9531-1 has been completed and posted.		JTG
If vessel contains leaded product, all requirements of ITCPRO 9531.3 have been met.		JTG

PERSONNEL PROTECTIVE EQUIPMENT

EYES
- ☐ Chemical Goggles
- ☐ Face Shield
- ☐ Safety Glasses
- ☐ Welders Mask

BODY
- ☐ Environmental Suit: ☐ PVC ☐ Butyl
- ☐ Heavy Suit: ☐ PVC ☐ Neoprene
- ☐ Light PVC Suit
- ☒ Yellow Tyvek Suit
- ☐ White Tyvek Suit

EXTREMITIES
- ☒ Hard Hat
- ☒ Gloves
- ☐ Boots ☐ PVC ☒ Neoprene
- ☒ Hoods ☐ PVC ☐ Neoprene
- ☒ Foot Coverings, Disposable

RESPIRATORY
- ☐ Self-Contained Respirator
- ☐ Hose Line Respirator
- ☐ Hose Line W/Egress
- ☒ Cartridge Respirator

Cartridge Type GMHC

- ☐ Dust Respirator

EQUIPMENT REQUIRED
- ☒ Fire Extinguisher
- ☐ Fire Blanket
- ☐ Charged Water Hose
- ☒ Combustible Gas Indicator

Special Instructions: A fire watch will be provided. Combustibles will be monitored throughout this process. Excavation is sloped to within safe entry parameters

Completed by: JEFF COUGHLIN (Name Printed) Jeff Coughlin (Signature) 11-18-94 (Date)

Manager

ITC FORM 9571-1
CS/103-5-85

195-1-

TECHNOLOGY CORPORATION

HOT WORK PERMIT

erating Area Exclusion Zone Good for this date only 11-29 19 94

Specific vessel or equipment Pugmill

Work to be done Cut Bearing cups off Shaft

TESTS

STATE EXACT LOCATION OF TEST	TIME	PERCENT LOWER EXPLOSION LIMIT	PERCENT OXYGEN	OTHERS		INITIAL
Pugmill	1735	0%	21%			CIM

CHECK LIST

	Initial: Yes	Initial: Does Not Apply
Operations/plant personnel have been informed of work to be performed	✓	
Tanks/lines/valves are disconnected, blinded, or locked out.	✓	
Equipment and all attached piping has been cleaned and purged with: (check blank) Water___ Steam___ Inert gas___ Air___		✓
Electrical service has been locked out and tagged.	✓	
All grounding/bonding wire in place.	✓	
Surrounding equipment and operations are safe for hot work.	✓	
No open vessels or lines within 35 feet of hot work area.	✓	
No combustible items within 35 feet of hot work area or covered with wetted tarpaulins.	✓	
Fire Watch has been provided by Contractor.	✓	
No flammable gases greater than 10% LEL in hot work area.	✓	
All requirements of ITCPRO 9531 for Confined Space Entry have been met and ITC Form 9531-1 has been completed and posted.		
If vessel contains leaded product, all requirements of ITCPRO 9531.3 have been met.		✓

PERSONNEL PROTECTIVE EQUIPMENT

EYES
- ☐ Chemical Goggles
- ☑ Face Shield
- ☐ Safety Glasses
- ☐ Welders Mask

BODY
- ☐ Environmental Suit: ☐ PVC ☐ Butyl
- ☐ Heavy Suit: ☐ PVC ☐ Neoprene
- ☐ Light PVC Suit
- ☑ Yellow Tyvek Suit
- ☐ White Tyvek Suit

EXTREMITIES
- ☑ Hard Hat
- ☑ Gloves
- ☑ Boots ☐ PVC ☑ Neoprene
- ☑ Hoods ☐ PVC ☐ Neoprene
- ☐ Foot Coverings, Disposable

RESPIRATORY
- ☐ Self-Contained Respirator
- ☐ Hose Line Respirator
- ☐ Hose Line W/Egress
- ☑ Cartridge Respirator

Cartridge Type _____
- ☐ Dust Respirator

EQUIPMENT REQUIRED
- ☑ Fire Extinguisher
- ☐ Fire Blanket
- ☑ Charged Water Hose
- ☐ Combustible Gas Indicator

Special Instructions:

Completed by: KENNETH McKINNEY (Name Printed) Kenneth McKinney (Signature) 11-28-94 (Date)

Manager

ITC FORM 9571-1
CS/103-5-85

195-1

[ ] CONFINED SPACE ENTRY PERMIT

ORIGINAL COPIES OF PERMIT WILL REMAIN AT JOB SITE UNTIL JOB IS COMPLETED

1. LOCATION AND DESCRIPTION OF CONFINED SPACE: Dryer

DATE: 12-7-96

PURPOSE OF ENTRY: Work + Inspection

TIME: 900 : 00 M

DEPARTMENT: Thermal

EXPIRATION: M

PERSON IN CHARGE OF WORK: Tim Cook

PHONE: (607) 869-1687

2. CREW MEMBERS

Blanco

Smiley

Spatio

3.

SPECIAL REQUIREMENTS	YES	NO	
LOCK OUT - DE-ENERGIZE	X		ESCAPE HARNESS
LINES BROKEN - CAPPED OR BLANKED		X	TRIPOD RETRIVAL ESCAPE UNIT
PURGE - FLUSH AND VENT		X	LIFELINES
VENTILATION	X		FIRE EXTINGUISHERS
SECURE AREA		X	LIGHTING EXPLOSION PROOF
BREATHING APPARATUS AIRLINE/ESCAPE PAK, SCBA		X	PROTECTIVE CLOTHING
RESPIRATOR	X		COMMUNICATION - RADIO/SIGHT/ROPE

4.

TEST(S) TO BE TAKEN (VALID FOR ONE HOUR TURN ONLY)	PERMISSABLE ENTRY LIMIT	YES	NO	DATE M	DATE M	DATE M	DATE M	DATE M	DATE M
% OF OXYGEN	>19.5% & <22%								
% OF L.E.L	LESS THAN 10%								
CARBON MONOXIDE	<50 ppm								
AROMATIC HYDROCARBON	<10 ppm								
HYDROGEN SULFIDE	<10 ppm								
OTHER									

PERSON WHO TESTED ATMOSPHERE TO APPROVE ENTRY (print name) X

NOTE: CONTINUOUS/PERIODIC TESTS SHALL BE ESTABLISHED BEFORE BEGINNING JOB. ANY QUESTIONS PERTAINING TO TEST REQUIREMENTS CONTACT HEALTH & SAF

5. INSTRUMENTS USED — NAME — TYPE — IDENTIFICATION NO.

TMX 410 - O2 Lel

SAFETY/ATTENDENT — NAME — HARD HAT #

SPECIAL INSTRUCTIONS:

6.

7. PERSON WHO IS TRAINED IN FIRST AID AND C.P.R. Tim Cook

EMERGENCY WARNING SIGNALS: USE OF AIR HORN; ONE (1) LONG BLAST: BREAK TWO (2) SHORT BLASTS: NEED TO PROCEED OUT. MULTIPLE SHORT BLASTS: EMERGENCY, EXIT

AMBULANCE _____ FIRE/RESCUE _____

SUPERVISOR AUTHORIZING ALL ABOVE CONDITIONS SATISFIED _____ CORPORATE AUTHORIZING SIGNATURE _____

P.E.L. PERMISSIBLE ENTRY LIMIT
L.E.L. LOWER EXPLOSION LEVEL

ORIGINAL TO DEPARTMENT
COPY TO SAFETY

HASFORM.32

CONFINED SPACE ENTRY PERMIT

1. Location and Description
of confined space Drier Date 12-7-94
Purpose of Entry Work + Inspection Time 900 P M
Department Thermal Expiration _____ M
Person in charge of work Tim Cook Phone (602) 869-1684

2. Crew Members:

Smiley		
Blanco		
Spatio		

3.

HEALTH AND SAFETY MEETING

Location: Fertech

Project No. TH 4021

Meeting Place: Decon Trailer

Items discussed: Safe to enter / Lock out

Use additional space as required:

Personnel in attendance:

Print Name: Signature:

[ ] CONFINED SPACE ENTRY PERMIT

ORIGINAL COPIES OF PERMIT WILL REMAIN AT JOB SITE UNTIL JOB IS COMPLETED

1. LOCATION AND DESCRIPTION OF CONFINED SPACE — DRYER — DATE Dec 7 8

PURPOSE OF ENTRY — INSPECTION — TIME 12 : 30 M

DEPARTMENT — THERMAL — EXPIRATION 12/8/94 7 M

PERSON IN CHARGE OF WORK — WAYNE RAULERSON — PHONE ( )

2. CREW MEMBERS

DEMO SHERMAN

STEVE PARNHAM

3.

SPECIAL REQUIREMENTS	YES	NO		YE
LOCK OUT - DE-ENERGIZE	✓		ESCAPE HARNESS	✓
LINES BROKEN - CAPPED OR BLANKED		✓	TRIPOD RETRIVAL ESCAPE UNIT N/A	
PURGE - FLUSH AND VENT		✓	LIFELINES	✓
VENTILATION		✓	FIRE EXTINGUISHERS	✓
SECURE AREA	✓		LIGHTING EXPLOSION PROOF	✓
BREATHING APPARATUS AIRLINE/ESCAPE PAK, SCBA		✓	PROTECTIVE CLOTHING	✓
RESPIRATOR	✓		COMMUNICATION - RADIO/SIGHT/ROPE	✓

4.

TEST(S) TO BE TAKEN (VALID FOR ONE 8-HOUR TURN ONLY)	PERMISSABLE ENTRY LIMIT	YES	NO	DATE M	DATE M	DATE M	DATE M	DATE M	DATE M
% OF OXYGEN	>19.5% & <22%	✓							
% OF L.E.L	LESS THAN 10%	✓							
CARBON MONOXIDE	<50 ppm								
AROMATIC HYDROCARBON	<10 ppm								
HYDROGEN SULFIDE	<10 ppm								
OTHER									

PERSON WHO TESTED ATMOSPHERE TO APPROVE ENTRY (print name) — Wayne Raulerson

NOTE: CONTINUOUS/PERIODIC TESTS SHALL BE ESTABLISHED BEFORE BEGINNING JOB. ANY QUESTIONS PERTAINING TO TEST REQUIREMENTS CONTACT HEALTH & SAFET

5. INSTRUMENTS USED — NAME — TYPE — IDENTIFICATION NO.

TMX 410 — O2 LEL meter

SAFETY/ATTENDENT — NAME STEVE S. PARNHAM — HARD HAT #

SPECIAL INSTRUCTIONS:

6.

7. PERSON WHO IS TRAINED IN FIRST AID AND C.P.R. — Wayne Raulerson

EMERGENCY WARNING SIGNALS: USE OF AIR HORN; ONE (1) LONG BLAST: BREAK TWO (2) SHORT BLASTS: NEED TO PROCEED OUT. MULTIPLE SHORT BLASTS: EMERGENCY, EXIT

AMBULANCE — FIRE/RESCUE

SUPERVISOR AUTHORIZING ALL ABLOVE CONDITIONS SATISFIED — CORPORATE AUTHORIZING SIGNATURE

P.E.L. PERMISSIBLE ENTRY LIMIT
L.E.L. LOWER EXPLOSION LEVEL

ORIGINAL TO DEPARTMENT
COPY TO SAFETY

BASFORM.37

CONFINED SPACE ENTRY PERMIT

1. Location and Description
of confined space Drier Date 12-7-94
Purpose of Entry Inspection Time ____ ___M
Department Thermal Expiration ____ M
Person in charge of work Wayne Roulerson Phone (607) 8691684

2. Crew Members:
Demo Sherman
Steve Parnham

3.

HEALTH AND SAFETY MEETING

Location: Prior

Project No. TH 4021

Meeting Place: _____

Items discussed: _____

_____

_____

_____

Use additional space as required:

Personnel in attendance:

Print Name: Signature:

[ ] CONFINED SPACE ENTRY PERMIT

WILL REMAIN AT JOB SITE UNTIL JOB IS COMPLETED

1. LOCATION AND DESCRIPTION OF CONFINED SPACE: Crier — DATE: DEC 7 - 94

PURPOSE OF ENTRY: Inspection — TIME: ____ : ____ M

DEPARTMENT: ____ — EXPIRATION: ____ M

PERSON IN CHARGE OF WORK: Bob Lachowski — PHONE ( ) ____

2. CREW MEMBERS
WAYNE RAULERSON
STEVE PARNHAM
ERNIE VOORHIES

3.

SPECIAL REQUIREMENTS	YES	NO		YES	NO
LOCK OUT - DE-ENERGIZE	✓		ESCAPE HARNESS	✓	
LINES BROKEN - CAPPED OR BLANKED	NA		TRIPOD RETRIVAL ESCAPE UNIT		✓
PURGE - FLUSH AND VENT	✓		LIFELINES	✓	
VENTILATION	✓		FIRE EXTINGUISHERS	✓	
SECURE AREA	✓		LIGHTING EXPLOSION PROOF		✓
BREATHING APPARATUS AIRLINE/ESCAPE PAK, SCBA		✓	PROTECTIVE CLOTHING	✓	
RESPIRATOR	✓		COMMUNICATION - RADIO/SIGHT/ROPE	✓	

4.

TEST(S) TO BE TAKEN (VALID FOR ONE 8-HOUR TURN ONLY)	PERMISSABLE ENTRY LIMIT	YES	NO	DATE M	DATE M	DATE M	DATE M	DATE M	DATE M
% OF OXYGEN	>19.5% & <22%	✓							
% OF L.E.L.	LESS THAN 10%	✓							
CARBON MONOXIDE	<50 ppm		✓						
AROMATIC HYDROCARBON	<10 ppm		✓						
HYDROGEN SULFIDE	<10 ppm		✓						
OTHER			✓						

PERSON WHO TESTED ATMOSPHERE TO APPROVE ENTRY (print name) W. Rauleson

NOTE: CONTINUOUS/PERIODIC TESTS SHALL BE ESTABLISHED BEFORE BEGINNING JOB. ANY QUESTIONS PERTAINING TO TEST REQUIREMENTS CONTACT HEALTH & SAFE

5. INSTRUMENTS USED — NAME: INDUSTRIAL SCIENTIFIC CORP — TYPE: LEL/O2 TMX 410 — IDENTIFICATION NO.

SAFETY/ATTENDENT — NAME: Bob Lachowski — HARD HAT #
STEVE PARNHAM
ERNIE VOORHIES

6. SPECIAL INSTRUCTIONS:

7. PERSON WHO IS TRAINED IN FIRST AID AND C.P.R. Bob Lachowski

EMERGENCY WARNING SIGNALS: USE OF AIR HORN; ONE (1) LONG BLAST: BREAK TWO (2) SHORT BLASTS: NEED TO PROCEED OUT, MULTIPLE SHORT BLASTS: EMERGENCY, EXIT

AMBULANCE: GENEVA HOSPITAL — FIRE/RESCUE: ____

SUPERVISOR AUTHORIZING ALL ABOVE CONDITIONS SATISFIED: ____ — CORPORATE AUTHORIZING SIGNATURE: ____

P.E.L. PERMISSIBLE ENTRY LIMIT
L.E.L. LOWER EXPLOSION LEVEL

H&SFORM.32

ORIGINAL TO DEPARTMENT
COPY TO SAFETY

CONFINED SPACE ENTRY PERMIT

1. Location and Description
of confined space SENECA ARMY DEPOT ASH LANDFILL Date DEC 7-94
Purpose of Entry INSIDE OF DRYER Time 12 00 PM
Department _____ Expiration _____ M
Person in charge of work BOB LACHOWSKI Phone (___) _____

2. Crew Members:

BOB LACHOWSKI	TERRIE VOORHIES	
WAYNE RAWLINSON		
STEVE PARNHAM		

3.

[X] CONFINED SPACE ENTRY PERMIT

ORIGINAL COPIES OF PERMIT WILL REMAIN AT JOB SITE UNTIL JOB IS COMPLETED

1. LOCATION AND DESCRIPTION OF CONFINED SPACE — DRYER DRum — DATE 8 Dec 94

PURPOSE OF ENTRY — Check inside For Noise — TIME ____ : ____ M

DEPARTMENT ____ — EXPIRATION ____ M

PERSON IN CHARGE OF WORK — WAYNE RAULERSON — PHONE ( ) ____

2. CREW MEMBERS

ERNIE VOORHIES — HARRY FAIER

BILL WILLIAMS — STEVE PARNHAM

D. SHERMAN — B. LACHOWSKI

3.

SPECIAL REQUIREMENTS	YES	NO		YES	HI
LOCK OUT - DE-ENERGIZE	✓		ESCAPE HARNESS	✓	
LINES BROKEN - CAPPED OR BLANKED	N/A		TRIPOD RETRIVAL ESCAPE UNIT		✓
PURGE - FLUSH AND VENT	✓		LIFELINES	✓	
VENTILATION	✓		FIRE EXTINGUISHERS	✓	
SECURE AREA	✓		LIGHTING EXPLOSION PROOF		■
BREATHING APPARATUS AIRLINE/ESCAPE PAK, SCBA	N/A		PROTECTIVE CLOTHING	✓	
RESPIRATOR	✓		COMMUNICATION - RADIO/SIGHT/ROPE	✓	

4.

TEST(S) TO BE TAKEN VALID FOR ONE 1-HOUR TURN ONLY	PERMISSABLE ENTRY LIMIT	YES	NO	DATE M	DATE M	DATE M	DATE M	DATE M	DATE M
% OF OXYGEN	>19.5% & <22%	✓							
% OF L.E.L.	LESS THAN 10%	✓							
CARBON MONOXIDE	<50 ppm	✓							
AROMATIC HYDROCARBON	<10 ppm	✓							
HYDROGEN SULFIDE	<10 ppm	N/A							
OTHER									

PERSON WHO TESTED ATMOSPHERE TO APPROVE ENTRY (print name) ____

NOTE: CONTINUOUS/PERIODIC TESTS SHALL BE ESTABLISHED BEFORE BEGINNING JOB. ANY QUESTIONS PERTAINING TO TEST REQUIREMENTS CONTACT HEALTH & SAF

5. INSTRUMENTS USED — NAME INDUSTRIAL SCIENTIFIC COND — TYPE Tmx 410 — IDENTIFICATION NO.

SAFETY/ATTENDENT — NAME D. SHERMAN / GREG McELROY FLUM IT — HARD HAT #

6. SPECIAL INSTRUCTIONS:

7. PERSON WHO IS TRAINED IN FIRST AID AND C.P.R. — ERNIE VOORHIES

EMERGENCY WARNING SIGNALS: USE OF AIR HORN; ONE (1) LONG BLAST: BREAK TWO (2) SHORT BLASTS: NEED TO PROCEED OUT. MULTIPLE SHORT BLASTS: EMERGENCY, EXIT

AMBULANCE ____ FIRE/RESCUE ____

SUPERVISOR AUTHORIZING ALL ABOVE CONDITIONS SATISFIED ____ CORPORATE AUTHORIZING SIGNATURE ____

P.E.L. PERMISSIBLE ENTRY LIMIT
L.E.L. LOWER EXPLOSION LEVEL

H&S FORM 57

ORIGINAL TO DEPARTMENT
COPY TO SAFETY

IT CORPORATION
2790 Mosside Blvd.
Monroeville, PA 15146

DAILY SAFETY LOG

Seneca Army Depot
Romulus N.Y.
Project # 519200

DATE: 12-9-94
DAY: Friday

Number	Personnel	Work Descritpion	Equipment Being Utilized
		THE FOLLOWING WORK WAS IN PROGRESS TODAY: Ash staging and sampling	Front End loader
	Project Manager		
1	Gen. Oper Supv.		
	Office Manager		
	Secretary		
1	H & S Specialist		
	QC Supv. Engr.		
	Field Engineer		
1	Air Samp. Spec.		
		PROTECTIVE CLOTHING BEING USED BY EMPLOYEES: (Level C) Hard hat, Air purifying Respirator, Neoprene boots, Tyvek, Nitrile + Latex gloves	
	Other		
3	Sub Total Mgmt.		
	Equip. Operator		
	Carpenter		
1	Decon. Laborer		
	Foreman		
	Warehousman		
		PROTECTIVE DEVICES BEING USED BY: IT Personnel: Level C + D	
1	Sub Total Craft	Subcontractors: Level C + D	
	Others		WORK AREAS/PERSONNEL: Eye Wash, Emergency Alarm, Fire Extinguisher, First aid Kit
		Visitors: None on site	
		Designated State and Federal Representatives: None on site	
	Sub Total Others		
4	Subcontractors		
		AREAS CHECKED: Entire job site	
		HEAT STRESS OR COLD STRESS MONITORING: cold stress	
		AIR MONITORING CONDUCTED: yes	
	Sub Total Subs		
8	Grand Total		

Kenneth McKinney 12-9-94
Safety & Health Specialist Date

[X] CONFINED SPACE ENTRY PERMIT

ORIGINAL COPIES OF PERMIT WILL REMAIN AT JOB SITE UNTIL JOB IS COMPLETED

1. LOCATION AND DESCRIPTION OF CONFINED SPACE: Shaker Screen — DATE: 9 Dec 94

PURPOSE OF ENTRY: Clean Hopper — TIME: 3:40 PM

DEPARTMENT: Thermal — EXPIRATION: 8:00 P.M

PERSON IN CHARGE OF WORK: Steve Parkham — PHONE (607) 868-1684

2. CREW MEMBERS

Demetrious Sherman — Steve Parkham

Ernie Vhoorin — Bill Williams

3. SPECIAL REQUIREMENTS

	YES	NO		
LOCK OUT - DE-ENERGIZE	X		ESCAPE HARNESS	yes
LINES BROKEN - CAPPED OR BLANKED		N/A	TRIPOD RETRIVAL ESCAPE UNIT	no
PURGE - FLUSH AND VENT		N/A	LIFELINES	yes
VENTILATION	X		FIRE EXTINGUISHERS	yes
SECURE AREA	X		LIGHTING EXPLOSION PROOF	N/A
BREATHING APPARATUS AIRLINE/ESCAPE PAK, SCBA		N/A	PROTECTIVE CLOTHING	yes
RESPIRATOR	X		COMMUNICATION - RADIO/SIGHT/ROPE	yes

4.

TEST(S) TO BE TAKEN VALID FOR ONE 3-HOUR TURN ONLY	PERMISSABLE ENTRY LIMIT	YES	NO	DATE M	DATE M	DATE M	DATE M	DATE M	DATE M
% OF OXYGEN	>19.5% & <22%	X							
% OF L.E.L.	LESS THAN 10%	X							
CARBON MONOXIDE	<50 ppm								
AROMATIC HYDROCARBON	<10 ppm								
HYDROGEN SULFIDE	<10 ppm								
OTHER									

PERSON WHO TESTED ATMOSPHERE TO APPROVE ENTRY (print name): Greg McCrary

NOTE: CONTINUOUS/PERIODIC TESTS SHALL BE ESTABLISHED BEFORE BEGINING JOB. ANY QUESTIONS PERTAINING TO TEST REQUIREMENTS CONTACT HEALTH & SAFE

5. INSTRUMENTS USED — NAME — TYPE — IDENTIFICATION NO.

TMX 4:10-02/LEL H/W PL101

SAFETY/ATTENDENT — NAME — HARD HAT #

SPECIAL INSTRUCTIONS:

6.

7. PERSON WHO IS TRAINED IN FIRST AID AND C.P.R. Steve Parkham.

EMERGENCY WARNING SIGNALS: USE OF AIR HORN; ONE (1) LONG BLAST: BREAK TWO (2) SHORT BLASTS: NEED TO PROCEED OUT, MULTIPLE SHORT BLASTS: EMERGENCY, EXIT

AMBULANCE _____ FIRE/RESCUE _____

SUPERVISOR AUTHORIZING ALL ABLOVE CONDITIONS SATISFIED _____ CORPORATE AUTHORIZING SIGNATURE _____

P.E.L. PERMISSIBLE ENTRY LIMIT
L.E.L. LOWER EXPLOSION LEVEL

ORIGINAL TO DEPARTMENT
COPY TO SAFETY

H&SFORM.52

CONFINED SPACE ENTRY PERMIT

1. Location and Description
of confined space Shaker Screen Date 9 Dec 94
Purpose of Entry Clean Hooper Time 3 40 PM
Department Thermal Expiration 8:00 P.M
Person in charge of work Steve Parnham Phone (602) 869-1684

2. Crew Members:

De Metkus Sherman	Ernie Vhoorise	
Steve Parnham	Bill Williams	

3.

Anderson 265-17-6604 12/10/94 site specific for LTTD

William Williams 061-50-[illegible] 12/10/94

Dana [illegible] 452-39-7122 12-10-94

Terry Farr 266-62-8117 12-10-94

1. LOCATION AND DESCRIPTION OF CONFINED SPACE [illegible] DATE [illegible]

PURPOSE OF ENTRY [illegible] TIME [illegible] M

DEPARTMENT [illegible] EXPIRATION _____ M

PERSON IN CHARGE OF WORK [illegible] PHONE [illegible]

2. CREW MEMBERS

[illegible]

[illegible]

[illegible]

3. SPECIAL REQUIREMENTS	YES	NO		Y
LOCK OUT - DE-ENERGIZE	✓		ESCAPE HARNESS	✓
LINES BROKEN - CAPPED OR BLANKED		✓	TRIPOD RETRIVAL ESCAPE UNIT	
PURGE - FLUSH AND VENT		✓	LIFELINES	✓
VENTILATION		✓	FIRE EXTINGUISHERS	
SECURE AREA	✓		LIGHTING EXPLOSION PROOF	✓
BREATHING APPARATUS AIR [illegible] ESCAPE PAK, SCBA		✓	PROTECTIVE CLOTHING	✓
RESPIRATOR	✓		COMMUNICATION - RADIO/SIGHT/ROPE	

4. TEST(S) TO BE TAKEN VALID FOR ONE 8-HOUR TURN ONLY	PERMISSABLE ENTRY LIMIT	YES	NO	DATE M	DATE M	DATE M	DATE M	DATE M	DATE M
% OF OXYGEN	>19.5% [illegible]	✓							
% OF L.E.L.	LESS THAN 10%	✓							
CARBON MONOXIDE	<50 ppm								
AROMATIC HYDROCARBON	<10 ppm								
HYDROGEN SULFIDE	<10 ppm								
OTHER									

PERSON WHO TESTED ATMOSPHERE TO APPROVE ENTRY (print name) [illegible] McELROY

NOTE: CONTINUOUS/PERIODIC TESTS SHALL BE ESTABLISHED BEFORE BEGINNING JOB. ANY QUESTIONS PERTAINING TO TEST REQUIREMENTS CONTACT HEALTH & SAFE

5. INSTRUMENTS USED NAME TYPE IDENTIFICATION NO.

TMX 410 [illegible] METER

SAFETY/ATTENDENT NAME HARD HAT #

6. SPECIAL INSTRUCTIONS:

7. PERSON WHO IS TRAINED IN FIRST AID AND C.P.R.

EMERGENCY WARNING SIGNALS: USE OF AIR HORN; ONE (1) LONG BLAST; BREAK TWO (2) SHORT BLASTS; NEED TO PROCEED OUT, MULTIPLE SHORT BLASTS; MERGENCY, EXIT

AMBULANCE _____ FIRE RESCUE _____

SUPERVISOR AUTHORIZING ALL ABLOVE CONDITIONS SATISFIED _____ CORPORATE AUTHORIZING SIGNATURE _____

P.E.L. PERMISSIBLE ENTRY LIMIT
L.E.L. LOWER EXPLOSION LEVEL

ORIGINAL TO DEPARTMENT
COPY TO SAFETY

H&SFORM.ZIP

CONFINED SPACE ENTRY PERMIT

1. Location and Description
   of confined space Undercrusher Date 12-10-94
Purpose of Entry Clean out mud Time _____ ___M
Department THERMAL Expiration 12-10-94 M
Person in charge of work [illegible] Phone (607) 867-1684

2. Crew Members:

Lemo Sherman		
Harry Farr		
Bill Williams		

3.

INSPECTIONS AND TESTS FOR ENTRY INTO CONFINED SPACES

Date 12-12
Job Number Thermal Seneca
Page 1 of 1

Division: Thermal
Division Location: Romulus Army Dept
Customer: Fortech Environmental
Customer Address:
General Job Location: Crusher
Tank Or Vessel No. / Name:
Nature Of Material: Frozen Mud
Description Of Work Planned: Chisel Material
Chemicals Introduced To Space:

TESTS

TIME	PERCENT LOWER EXPLOSION LIMIT	PERCENT OXYGEN	BENZENE (ppm)	TOLUENE (ppm)	XYLENE (ppm)	H_2S (ppm)	CO (ppm)	OTHERS 0 (ppm)	OTHERS 0 (ppm)	OTHERS 0 (ppm)	ATMOSPHERE CLASS	INITIAL
1000		21	0	0	0	0	0					TC

CHECK LIST

	Initial Yes	Initial Does Not Apply
All lines leading to and from confined space have been blinded or disconnected.	X	
service disconnected or locked out.	X	
All grounding and bonding wire in place.	X	
All ignition sources have been isolated.	X	
Breathing supply and alarms checked and are in proper condition.	X	
The complete respiratory supply system has been checked and is in proper condition.	X	
All safety harnesses and life lines checked and in proper condition.	X	
Required protective clothing, gloves, boots, etc., being used.	X	
Employees have been trained in the use, care, and limitations of their respiratory protective equipment.	X	
Outside safety watch trained in emergency procedures and resuscitation.	X	
Vessel contains leaded product.		X
All emergency systems such as air packs, fire extinguishers, backup breathing supply, alarms, etc., ready for use.	X	
Special warning / caution signs posted.	X	
Ventilation equipment in use.		X
No employee with facial hair, eye glasses, or other gas tight seal obstructions will do work which requires a respirator, or act as emergency standby.	X	
Employees will not wear contact lenses in an atmosphere where a respirator is required.	X	

PERSONNEL PROTECTIVE EQUIPMENT

EYES
- ☐ Chemical Goggles
- ☐ Face Shield
- ☐ Safety Glasses

EXTREMITIES
- ☑ Hard Hat
- ☐ Gloves
- ☐ Boots ☐ PVC ☐ Neoprene
- ☐ Hoods ☐ PVC ☐ Neoprene
- ☑ Foot Coverings, Disposable ☐ Latex ☑ White tyvek

BODY
- ☐ Environmental Suit: PVC Butyl
- ☐ Heavy Suit: ☐ PVC Neoprene
- ☐ Intermediate PVC Suit
- ☐ Light PVC Suit
- ☑ Tyvek Suit: ☐ White ☑ Yellow ☐ Saranex

RESPIRATORY
- ☐ Self-Contained Respirator
- ☐ Air Line Respirator
- ☐ Air Line W/Egress
- ☑ Cartridge Respirator
- Cartridge Type

OTHER
- ☐ Hearing Protection
- ☑ Parachute Harness and Lifeline (Top Entry)
- ☐ Chest Harness and Lifeline (Side Entry)

Special Instructions:

Qualified Person: Tim Cook (Name Printed) Timothy T. (Signature) (Date)

[ ] CONFINED SPACE ENTRY PERMIT

WILL REMAIN AT JOB SITE UNTIL JOB IS COMPLETED

1. LOCATION AND DESCRIPTION OF CONFINED SPACE: Crusher

DATE: 12-12-94

PURPOSE OF ENTRY: Clean out

TIME: 10 : 30 AM

DEPARTMENT:

EXPIRATION: 6 : 30 PM

PERSON IN CHARGE OF WORK:

PHONE (706) 869-1684

2. CREW MEMBERS

Steve Parnham — Joe Buzzito

Bigs Sherman — Harrold Farr

3. SPECIAL REQUIREMENTS

	YES	NO		
LOCK OUT - DE-ENERGIZE	X		ESCAPE HARNESS	Yes
LINES BROKEN - CAPPED OR BLANKED	N/A		TRIPOD RETRIVAL ESCAPE UNIT	No
PURGE - FLUSH AND VENT	N/A		LIFELINES	Yes
VENTILATION	X		FIRE EXTINGUISHERS	Yes
SECURE AREA	X		LIGHTING EXPLOSION PROOF	Yes
BREATHING APPARATUS AIRLINE/ESCAPE PAK, SCBA	N/A		PROTECTIVE CLOTHING	Yes
RESPIRATOR	X		COMMUNICATION - RADIO/SIGHT/ROPE	Yes

4.

TEST(S) TO BE TAKEN (VALID FOR ONE 8-HOUR TURN ONLY)	PERMISSABLE ENTRY LIMIT	YES	NO	DATE M	DATE M	DATE M	DATE M	DATE M	DATE M
% OF OXYGEN	>19.5% & <22%	X							
% OF LEL	LESS THAN 10%	X							
CARBON MONOXIDE	<50 ppm								
AROMATIC HYDROCARBON	<10 ppm								
HYDROGEN SULFIDE	<10 ppm								
OTHER									

PERSON WHO TESTED ATMOSPHERE TO APPROVE ENTRY (print name): GREG McELROY

NOTE: CONTINUOUS/PERIODIC TESTS SHALL BE ESTABLISHED BEFORE BEGINNING JOB. ANY QUESTIONS PERTAINING TO TEST REQUIREMENTS CONTACT HEALTH & SAFE

5. INSTRUMENTS USED

NAME	TYPE	IDENTIFICATION NO.
TMX-410	O2/LEL	

SAFETY/ATTENDENT NAME — HARD HAT #

SPECIAL INSTRUCTIONS:

6.

7. PERSON WHO IS TRAINED IN FIRST AID AND C.P.R.: STEVE PARNHAM

EMERGENCY WARNING SIGNALS: USE OF AIR HORN; ONE (1) LONG BLAST: BREAK TWO (2) SHORT BLASTS: NEED TO PROCEED OUT. MULTIPLE SHORT BLASTS: EMERGENCY, EXIT

AMBULANCE _____ FIRE/RESCUE _____

SUPERVISOR AUTHORIZING ALL ABOVE CONDITIONS SATISFIED _____ CORPORATE AUTHORIZING SIGNATURE _____

P.E.L. PERMISSIBLE ENTRY LIMIT
L.E.L. LOWER EXPLOSION LEVEL

HASFORM.J2

ORIGINAL TO DEPARTMENT
COPY TO SAFETY

CONFINED SPACE ENTRY PERMIT

1. Location and Description
of confined space CRushed Date 12-12
Purpose of Entry Clean out Time 10-30 AM
Department Expiration 6:30 PM
Person in charge of work Phone (607) 869-1684

2. Crew Members:

STEVE PARNHAM	JOE RUZZITO	
BIGI SHERMAN	HAROLD PARK	

3.

HEAT, FLAME-PRODUCING DEVICE AND/OR HAZARDOUS WORK PERMIT

PERMIT # 94-66 ISSUED TO Fertech VALID FROM 13 Dec 94 THRU 15 Mar 95

PURPOSE: To operate kerosene heater to thraw out electrical equipment at the ash land fill clean up site.

OPERATING EMPLOYEE Two operators as assigned SUPERVISOR Bill Gibson

FIRE EXTINGUISHER REQUIRED: CO2 or Dry Chemical

REQUIREMENTS:

(X) Prior to commencement of work, the person(s) named on the permit will contact the foreman of the building or area in which the work is to be done.

(X) All explosives will be removed from the immediate vicinity of job site.

(X) No gasoline-operated equipment will be used nearer than 50 feet or refueled closer than 100 feet of an explosive location or operation. Refueling will be done with an approved-type safety can.

(X) All portable electric equipment will be properly grounded.

(X) Where open-flame operations are conducted, all combustible material where practicable will be removed from the site of the operation or will be protected with flame-resistant covering.

( ) ~~Authorized to carry matches, spark-producing or heat-producing device to and from work site in Restricted Area~~.

( ) Matches, spark or heat-producing devices will be removed from the area or turned in to: _____ at the end of the work day.

( ) ~~Operator of oxy-acetylene welding equipment will wear fire-resistant gauntlets and aprons~~.

REMARKS:

APPROVED: _____ SAFETY MANAGER _____ DIR/QUALITY ASSURANCE _____ FIRE CHIEF

ON EXPIRATION OF PERMIT OR COMPLETION OF THE JOB, PERMIT WILL BE TURNED IN TO THE OFFICE OF THE INITIATOR, OR TO THE GUARD ON DUTY AT POST. ANY VIOLATION OF THE REQUIREMENTS OF THIS PERMIT WILL BE JUSTIFICATION FOR STOPPING THE OPERATION UNTIL THE REQUIREMENTS ARE COMPLIED WITH.

"IN CASE OF SERIOUS ACCIDENT OR FIRE - DIAL 117"

SDSSE-LS Form 253, 1 Mar 87

INSPECTIONS AND TESTS FOR ENTRY INTO CONFINED SPACES

Date 12-14-94
Job Number TH 4021
Page 1 of 1

Division: Thermal
Division Location:
Customer: FERTech.
Customer Address:
General Job Location: DRyeR.
Tank Or Vessel No. / Name: DRyeR.
Nature Of Material: N/A
Description Of Work Planned: Hot WORK
Chemicals Introduced To Space:

TESTS

TIME	PERCENT LOWER EXPLOSION LIMIT	PERCENT OXYGEN	BENZENE (ppm)	TOLUENE (ppm)	XYLENE (ppm)	H_2S (ppm)	CO (ppm)	OTHERS ____ (ppm)	OTHERS ____ (ppm)	OTHERS ____ (ppm)	ATMOSPHERE CLASS	INITIAL
3:30	0	21.2	N/A	N/A	N/A	N/A	N/A					
4:00	0	21										

CHECK LIST

	Initial: Yes	Initial: Does Not Apply
All lines leading to and from confined space have been blinded or disconnected.	X	
Electric service disconnected or locked out.	X	
Electric grounding and bonding wire in place.	X	
All ignition sources have been isolated.	X	
Breathing supply and alarms checked and are in proper condition.	X	
The complete respiratory supply system has been checked and is in proper condition.		X
All safety harnesses and life lines checked and in proper condition.	X	
Required protective clothing, gloves, boots, etc., being used.	X	
Employees have been trained in the use, care, and limitations of their respiratory protective equipment.	X	
Outside safety watch trained in emergency procedures and resuscitation.	X	
Vessel contains leaded product.		X
All emergency systems such as air packs, fire extinguishers, backup breathing supply, alarms, etc., ready for use.	X	
Special warning / caution signs posted.		X
Ventilation equipment in use.		X
No employee with facial hair, eye glasses, or other gas tight seal obstructions will do work which requires a respirator, or act as emergency standby.	X	
Employees will not wear contact lenses in an atmosphere where a respirator is required.	X	

PERSONNEL PROTECTIVE EQUIPMENT

EYES
- ☐ Chemical Goggles
- ☐ Face Shield
- ☐ Safety Glasses

EXTREMITIES
- ☐ Hard Hat
- ☒ Gloves
- ☐ Boots ☐ PVC ☐ Neoprene
- ☐ Hoods ☐ PVC ☐ Neoprene
- ☒ Foot Coverings, Disposable ☐ Latex ☐ White Tyvek

BODY
- ☐ Environmental Suit: PVC Butyl
- ☐ Heavy Suit: ☐ PVC Neoprene
- ☐ Intermediate PVC Suit
- ☒ Light PVC Suit
- ☐ Tyvek Suit: ☐ White ☐ Yellow ☐ Saranex

RESPIRATORY
- ☐ Self-Contained Respirator
- ☐ Air Line Respirator
- ☐ Air Line W/Egress
- ☒ Cartridge Respirator
- Cartridge Type GMC-H

OTHER
- ☐ Hearing Protection
- ☐ Parachute Harness and Lifeline (Top Entry)
- ☐ Chest Harness and Lifeline (Side Entry)

Special Instructions: Be CAREFULL WATCH YOUR Fellow Employee

Qualified Person: Bill Gibson (Name Printed) Signature Date

FORM 9531-1B SEE REVERSE Manager Date

INSPECTIONS AND TESTS FOR ENTRY INTO CONFINED SPACES

Date 12-14-94
Job Number TH4021
Page 1 of 1

Division: THERMAL
Division Location:
Customer: Fe. Tech
Customer Address:
General Job Location: Feed Hopper
Tank Or Vessel No. / Name: Feed Bin
Nature Of Material: Frozen Mud.
Description Of Work Planned: Chip out frozen Material
Chemicals Introduced To Space: N/A.

TESTS

TIME	PERCENT LOWER EXPLOSION LIMIT	PERCENT OXYGEN	BENZENE (ppm)	TOLUENE (ppm)	XYLENE (ppm)	H_2S (ppm)	CO (ppm)	OTHERS ____ (ppm)	OTHERS ____ (ppm)	OTHERS ____ (ppm)	ATMOSPHERE CLASS	INITIAL
			N/A									

CHECK LIST

	Initial: Yes	Initial: Does Not Apply
All lines leading to and from confined space have been blinded or disconnected.		✓
service disconnected or locked out.	✓	
All grounding and bonding wire in place.	✓	
All ignition sources have been isolated.		✓
Breathing supply and alarms checked and are in proper condition.		✓
The complete respiratory supply system has been checked and is in proper condition.		✓
All safety harnesses and life lines checked and in proper condition.	✓	
Required protective clothing, gloves, boots, etc., being used.	✓	
Employees have been trained in the use, care, and limitations of their respiratory protective equipment.		✓
Outside safety watch trained in emergency procedures and resuscitation.	✓	
Vessel contains leaded product.	✓	
All emergency systems such as air packs, fire extinguishers, backup breathing supply, alarms, etc., ready for use.	✓	
Special warning / caution signs posted.	✓	
Ventilation equipment in use.		✓
No employee with facial hair, eye glasses, or other gas tight seal obstructions will do work which requires a respirator, or act as emergency standby.	✓	
Employees will not wear contact lenses in an atmosphere where a respirator is required.	✓	

PERSONNEL PROTECTIVE EQUIPMENT

EYES
- ☐ Chemical Goggles
- ☐ Face Shield
- ☐ Safety Glasses

EXTREMITIES
- ☑ Hard Hat
- ☑ Gloves
- ☑ Boots ☐ PVC ☐ Neoprene
- ☑ Hoods ☐ PVC ☐ Neoprene
- ☑ Foot Coverings, Disposable ☐ Latex ☐ White Tyvek

BODY
- ☐ Environmental Suit: PVC Butyl
- ☐ Heavy Suit: ☐ PVC Neoprene
- ☐ Intermediate PVC Suit
- ☑ Light PVC Suit
- ☐ Tyvek Suit: ☐ White ☐ Yellow ☐ Saranex

RESPIRATORY
- ☐ Self-Contained Respirator
- ☐ Air Line Respirator
- ☐ Air Line W/Egress
- ☑ Cartridge Respirator
- Cartridge Type GMC-H

OTHER
- ☐ Hearing Protection
- ☐ Parachute Harness and Lifeline (Top Entry)
- ☐ Chest Harness and Lifeline (Side Entry)

ecial Instructions:

alified Person: Wayne Reulesen (Name Printed) W. Reulesen (Signature) 12-14-94 (Date)

Manager Date

FORM 9531-1B SEE REVERSE

INTERNATIONAL TECHNOLOGY CORPORATION

HOT WORK PERMIT

Operating Area DRYER Good for this date only 12/14 1994

Specific vessel or equipment DRYER

Work to be done CUTTING FLANGE OFF DRYER

TESTS

STATE EXACT LOCATION OF TEST	TIME	PERCENT LOWER EXPLOSION LIMIT	PERCENT OXYGEN	OTHERS		INITIAL
O2/LEL	1530	0	211			

CHECK LIST

	Initial: Yes	Initial: Does Not Apply
Operations/plant personnel have been informed of work to be performed	X	
All tanks/lines/valves are disconnected, blinded, or locked out.	X	
Equipment and all attached piping has been cleaned and purged with: (check blank) Water____ Steam____ Inert gas____ Air X	X	
Electrical service has been locked out and tagged.	X	
All grounding/bonding wire in place.		X
Surrounding equipment and operations are safe for hot work.	X	
No open vessels or lines within 35 feet of hot work area.	X	
No combustible items within 35 feet of hot work area or covered with wetted tarpaulins.	X	
Fire Watch has been provided by Contractor.	X	
No flammable gases greater than 10% LEL in hot work area.	X	
All requirements of ITCPRO 9531 for Confined Space Entry have been met and ITC Form 9531-1 has been completed and posted.		X
If vessel contains leaded product, all requirements of ITCPRO 9531.3 have been met.		

PERSONNEL PROTECTIVE EQUIPMENT

EYES
- ☐ Chemical Goggles
- ☐ Face Shield
- ☐ Safety Glasses
- ☐ Welders Mask

BODY
- ☐ Environmental Suit: ☐ PVC ☐ Neoprene
- ☐ Heavy Suit: ☐ PVC ☐ Neoprene
- ☐ Light PVC Suit
- ☒ Yellow Tyvek Suit
- ☐ White Tyvek Suit

EXTREMITIES
- ☒ Hard Hat
- ☒ Gloves
- ☒ Boots ☐ PVC ☐ Neoprene
- ☒ Hoods ☒ PVC ☐ Neoprene
- ☐ Foot Coverings, Disposable

RESPIRATORY
- ☐ Self-Contained Respirator
- ☐ Hose Line Respirator
- ☐ Hose Line W/Egress
- ☒ Cartridge Respirator

Cartridge Type GMC-H
- ☐ Dust Respirator

EQUIPMENT REQUIRED
- ☒ Fire Extinguisher
- ☐ Fire Blanket
- ☐ Charged Water Hose
- ☒ Combustible Gas Ind

Special Instructions:

Completed by: GREG McELROY [signature]
Name Printed Signature

Manager

ITC FORM 9571-1
CS/103-5-85

INSPECTIONS AND TESTS FOR ENTRY INTO CONFINED SPACES

Date _____
Job Number _____
Page 1 of 1

Division: Thermal
Customer: Fettech Environmental
General Job Location: Rice
Nature Of Material: _____
Description Of Work Planned: Inspect Rice

Division Location: _____
Customer Address: _____
Tank Or Vessel No. / Name: Rice
Chemicals Introduced To Space: None

TESTS

TIME	PERCENT LOWER EXPLOSION LIMIT	PERCENT OXYGEN	BENZENE (ppm)	TOLUENE (ppm)	XYLENE (ppm)	H_2S (ppm)	CO (ppm)	OTHERS _____ (ppm)	_____ (ppm)	_____ (ppm)	ATMOSPHERE CLASS	INITIAL

CHECK LIST

	Initial: Yes	Initial: Does Not Apply
All lines leading to and from confined space have been blinded or disconnected.	✓	
[illegible] service disconnected or locked out.	✓	
All grounding and bonding wire in place.	✓	
All ignition sources have been isolated.	✓	
Breathing supply and alarms checked and are in proper condition.		✓
The complete respiratory supply system has been checked and is in proper condition.		✓
All safety harnesses and life lines checked and in proper condition.	✓	
Required protective clothing, gloves, boots, etc., being used.	✓	
Employees have been trained in the use, care, and limitations of their respiratory protective equipment.	✓	
Outside safety watch trained in emergency procedures and resuscitation.	✓	
Vessel contains leaded product.		✓
All emergency systems such as air packs, fire extinguishers, backup breathing supply, alarms, etc., ready for use.	✓	
Special warning / caution signs posted.	✓	
Ventilation equipment in use.		✓
No employee with facial hair, eye glasses, or other gas tight seal obstructions will do work which requires a respirator, or act as emergency standby.	✓	
Employees will not wear contact lenses in an atmosphere where a respirator is required.	✓	

PERSONNEL PROTECTIVE EQUIPMENT

EYES
- ☐ Chemical Goggles
- ☐ Face Shield
- ☐ Safety Glasses

EXTREMITIES
- ☑ Hard Hat
- ☐ Gloves
- ☐ Boots ☐ PVC ☐ Neoprene
- ☐ Hoods ☐ PVC ☐ Neoprene
- ☐ Foot Coverings, Disposable ☐ Latex ☐ White (Tyvek)

BODY
- ☐ Environmental Suit: PVC Butyl
- ☐ Heavy Suit: PVC Neoprene
- ☐ Intermediate PVC Suit
- ☐ Light PVC Suit
- ☐ Tyvek Suit: ☐ White ☑ Yellow ☐ Saranex

RESPIRATORY
- ☐ Self-Contained Respirator
- ☐ Air Line Respirator
- ☐ Air Line W/Egress
- ☑ Cartridge Respirator
- Cartridge Type Organic

OTHER
- ☐ Hearing Protection
- ☐ Parachute Harness and Lifeline (Top Entry)
- ☐ Chest Harness and Lifeline (Side Entry)

ecial Instructions: _____

alified Person: Timothy T Cook (Name Printed) — Timothy T Cook (Signature)

SEE REVERSE

Manager

FORM 9531-1B

INSPECTIONS AND TESTS FOR ENTRY INTO CONFINED SPACES

Date 12/
Job Number Ramulus Army Depot
Page 1 of 1

Division: Thermal
Division Location: Ramulus Army Depot
Customer: Fertech Environmental
Customer Address:
General Job Location: Crushed
Tank Or Vessel No. / Name: Impact Crusher
Nature Of Material: Muddy Material
Description Of Work Planned: Remove Material
Chemicals Introduced To Space: None

TESTS

TIME	PERCENT LOWER EXPLOSION LIMIT	PERCENT OXYGEN	BENZENE (ppm)	TOLUENE (ppm)	XYLENE (ppm)	H_2S (ppm)	CO (ppm)	OTHERS (ppm)	OTHERS (ppm)	OTHERS (ppm)	ATMOSPHERE CLASS	INITIAL
1700	2+	2+										

CHECK LIST

	Initial Yes	Initial Does Not Apply
All lines leading to and from confined space have been blinded or di[illegible]ected.	✓	
[illegible] service disconnected or locked out.	✓	
All grounding and bonding wire in place.	✓	
All ignition sources have been isolated.	✓	
Breathing supply and alarms checked and are in proper condition.	✓	
The complete respiratory supply system has been checked and is in proper condition.		✓
All safety harnesses and life lines checked and in proper condition.	✓	
Required protective clothing, gloves, boots, etc., being used.	✓	
Employees have been trained in the use, care, and limitations of their respiratory protective equipment.	✓	
Outside safety watch trained in emergency procedures and resuscitation.	✓	
Vessel contains leaded product.		✓
All emergency systems such as air packs, fire extinguishers, backup breathing supply, alarms, etc., ready for use.	✓	
Special warning / caution signs posted.	✓	
Ventilation equipment in use.		✓
No employee with facial hair, eye glasses, or other gas tight seal obstructions will do work which requires a respirator, or act as emergency standby.	✓	
Employees will not wear contact lenses in an atmosphere where a respirator is required.	✓	

PERSONNEL PROTECTIVE EQUIPMENT

EYES
- ☐ Chemical Goggles
- ☒ Face Shield
- ☐ Safety Glasses

EXTREMITIES
- ☐ Hard Hat
- ☐ Gloves
- ☐ Boots ☐ PVC ☐ Neoprene
- ☐ Hoods ☐ PVC ☐ Neoprene
- ☐ Foot Coverings Disposable ☐ Latex ☐ White tyvek

BODY
- ☐ Environmental Suit ☐ PVC ☐ Butyl
- ☐ Heavy Suit: ☐ PVC ☐ Neoprene
- ☐ Intermediate PVC Suit
- ☐ Light PVC Suit
- ☐ Tyvek Suit: ☐ White ☐ Yellow ☐ Saranex

RESPIRATORY
- ☐ Self-Contained Respirator
- ☐ Air Line Respirator
- ☐ Air Line W/Egress
- ☒ Cartridge Respirator
- Cartridge Type Organics

OTHER
- ☐ Hearing Protection
- ☒ Parachute Harness and Lifeline (Top Entry)
- ☐ Chest Harness and Lifeline (Side Entry)

[illegible]ecial Instructions:

[illegible]alified Person. Tim Cook (Name Printed) [signature] (Signature) 12/17/[illegible] (Date)

SEE REVERSE

Manager Date

FORM 9531-1B

INTERNATIONAL TECHNOLOGY CORPORATION

HOT WORK PERMIT

ating Area DRYER Good for this date only 12/19 19 94

Specific vessel or equipment DRYER

Work to be done CUTTING + WELDING FLANGES

TESTS

STATE EXACT LOCATION OF TEST	TIME	PERCENT LOWER EXPLOSION LIMIT	PERCENT OXYGEN	OTHERS		INITIAL
O_2/LEL	0900	0	21			

CHECK LIST

	Initial: Yes	Initial: Does Not Apply
Operations/plant personnel have been informed of work to be performed	X	
A ks/lines/valves are disconnected, blinded, or locked out.	X	
Equipment and all attached piping has been cleaned and purged with: (check blank) Water ____ Steam ____ Inert gas ____ Air X	X	
Electrical service has been locked out and tagged.	X	
All grounding/bonding wire in place.	X	
Surrounding equipment and operations are safe for hot work.	X	
No open vessels or lines within 35 feet of hot work area.	X	
No combustible items within 35 feet of hot work area or covered with wetted tarpaulins.	X	
Fire Watch has been provided by Contractor.	X	
No flammable gases greater than 10% LEL in hot work area.	X	
All requirements of ITCPRO 9531 for Confined Space Entry have been met and ITC Form 9531-1 has been completed and posted.		X
If vessel contains leaded product, all requirements of ITCPRO 9531.3 have been met.		

PERSONNEL PROTECTIVE EQUIPMENT

EYES
- ☐ Chemical Goggles
- ☒ Face Shield
- ☐ Safety Glasses
- ☒ Welders Mask

BODY
- ☒ Environmental Suit: ☐ PVC ☐ Neoprene
- ☐ Heavy Suit: ☐ PVC ☐ Neoprene
- ☐ Light PVC Suit
- ☐ Yellow Tyvek Suit
- ☐ White Tyvek Suit

EXTREMITIES
- ☒ Hard Hat
- ☒ Gloves
- ☐ Boots ☐ PVC ☐ Neoprene
- ☐ Hoods ☐ PVC ☐ Neoprene
- ☒ Foot Coverings, Disposable

RESPIRATORY
- ☐ Self-Contained Respirator
- ☐ Hose Line Respirator
- ☐ Hose Line W/Egress
- ☐ Cartridge Respirator
- ☐ Cartridge Type ____
- ☒ Dust Respirator

EQUIPMENT REQUIRED
- ☒ Fire Extinguisher
- ☐ Fire Blanket
- ☐ Charged Water Hose
- ☒ Combustible Gas Indicator

Special Instructions: ____

Completed by: GREG McELROY (Name Printed) Signature

Manager

ITC FORM 9571-1
CS/103-5-85

INTERNATIONAL TECHNOLOGY CORPORATION

INSPECTIONS AND TESTS FOR ENTRY INTO CONFINED SPACES

Date 12/20/94
Job Number Romulus NY
Page 1 of 1

Division: Thermal Environmental
Division Location:
Customer: Fertech Environmental
Customer Address: Romulus Army Dept
General Job Location: Drier
Tank Or Vessel No. / Name: Drier
Describe Material In Space: Clean
Description Of Work Planned: Install Scraper
Chemicals Introduced Into Space: N/A

TESTS

TIME	PERCENT LOWER EXPLOSION LIMIT	PERCENT OXYGEN	BENZENE (ppm)	TOLUENE (ppm)	XYLENE (ppm)	H_2S (ppm)	CO (ppm)	OTHERS ____ (ppm)	OTHERS ____ (ppm)	OTHERS ____ (ppm)	ATMOSPHERE CLASS	INITIAL
0900	0	21										

CHECK LIST

	Initial Yes	Initial Does Not Apply
All lines leading to and from confined space have been blinded or disconnected.	X	
Electrical service disconnected or locked out.	X	
All grounding and bonding cables in place.	X	
All lighting, fittings, and extension cords are approved explosion proof equipment.	X	
Ground Fault Circuit Indicator (GFCI) checked and functioning.	X	
All ignition sources have been isolated.	X	
Breathing supply and alarms checked and are in proper condition.	X	
The complete respiratory supply system has been checked and is in proper condition.		X
All safety harnesses and life lines checked and in proper condition.	X	
Required protective clothing, gloves, boots, etc., being used.	X	
Employees have been trained in the use, care, and limitations of their respiratory protective equipment.	X	
Outside safety watch trained in emergency procedures and resuscitation.	X	
Vessel contains leaded product.		X
All emergency systems such as air packs, fire extinguishers, backup breathing supply, alarms, etc., ready for use.	X	
Special warning / caution signs posted.	X	
Ventilation equipment in use.	X	
No employee with facial hair, eye glasses, or other gas tight seal obstructions will do work which requires a respirator, or act as emergency standby.	X	
Employees will not wear contact lenses in an atmosphere where a respirator is required.	X	

PERSONNEL PROTECTIVE EQUIPMENT

EYES
- ☐ Chemical Goggles
- ☐ Face Shield
- ☐ Safety Glasses

EXTREMITIES
- ☐ Hard Hat
- ☐ Gloves
- ☐ Boots ☐ PVC ☐ Neoprene
- ☐ Hoods ☐ PVC ☐ Neoprene
- ☐ Foot Coverings, Disposable ☐ Latex ☒ White tyvek

BODY
- ☐ Encapsulating Suit: ☐ PVC ☐ Butyl
- ☐ Heavy Suit: ☐ PVC ☐ Neoprene
- ☐ Intermediate Suit: ☐ PVC ☐ Other
- ☐ Light Suit: ☐ PVC ☐ Other
- ☐ Tyvek Suit: ☐ White ☒ Yellow ☐ Saranex

RESPIRATORY
- ☐ Self-Contained Respirator
- ☐ Air Line Respirator
- ☐ Air Line W/Egress
- ☒ Cartridge Respirator
- Cartridge Type Organic

OTHER
- ☐ Hearing Protection
- ☐ Parachute Harness and Lifeline (Top Entry)
- ☐ Chest Harness and Lifeline (Side Entry)

Other Instructions: Lifeline hampers Free movement In Drier

Qualified Person: Timothy T Cook (Name Printed) Timothy T Cook (Signature) Date

Manager Date

-7-85 (1M)

CONTINUED ON REVERSE

INTERNATIONAL TECHNOLOGY CORPORATION

HOT WORK PERMIT

Operating Area KILN Good for this date only 12/30 19 92

Specific vessel or equipment DRYER

Work to be done WELDING & CUTTING

TESTS

STATE EXACT LOCATION OF TEST	TIME	PERCENT LOWER EXPLOSION LIMIT	PERCENT OXYGEN	OTHERS		INITIAL
O_2/LEL	0900	0	21			

CHECK LIST

	Initial: Yes	Initial: Does Not Apply
Operations/plant personnel have been informed of work to be performed	✓	
All tanks/lines/valves are disconnected, blinded, or locked out.	X	
Equipment and all attached piping has been cleaned and purged with: (check blank) Water____ Steam____ Inert gas____ Air X	X	
Electrical service has been locked out and tagged.	X	
All grounding/bonding wire in place.	✓	
Surrounding equipment and operations are safe for hot work.	X	
No open vessels or lines within 35 feet of hot work area.	✓	
No combustible items within 35 feet of hot work area or covered with wetted tarpaulins.	✓	
Fire Watch has been provided by Contractor.	X	
No flammable gases greater than 10% LEL in hot work area.	✓	
All requirements of ITCPRO 9531 for Confined Space Entry have been met and ITC Form 9531-1 has been completed and posted.		X
If vessel contains leaded product, all requirements of ITCPRO 9531.3 have been met.		

PERSONNEL PROTECTIVE EQUIPMENT

EYES
- ☐ Chemical Goggles
- ☒ Face Shield
- ☐ Safety Glasses
- ☒ Welders Mask

BODY
- ☒ Environmental Suit: ☐ PVC ☐ Neoprene
- ☐ Heavy Suit: ☐ PVC ☐ Neoprene
- ☐ Light PVC Suit
- ☐ Yellow Tyvek Suit
- ☐ White Tyvek Suit

EXTREMITIES
- ☒ Hard Hat
- ☒ Gloves
- ☐ Boots ☐ PVC ☐ Neoprene
- ☐ Hoods ☐ PVC ☐ Neoprene
- ☒ Foot Coverings, Disposable

RESPIRATORY
- ☐ Self-Contained Respirator
- ☐ Hose Line Respirator
- ☐ Hose Line W/Egress
- ☐ Cartridge Respirator

Cartridge Type ____
- ☒ Dust Respirator

EQUIPMENT REQUIRED
- ☒ Fire Extinguisher
- ☐ Fire Blanket
- ☐ Charged Water Hose
- ☒ Combustible Gas Indicator

Special Instructions:

Completed by: GREG MCELROY
Name Printed

Signature

Manager

ITC FORM 9571-1
CS/103-5-85

INSPECTIONS AND TESTS FOR ENTRY INTO CONFINED SPACES

Date 12/19/94
Job Number Rowlins Anyplace
Page 1 of 1

Division: Thermal
Division Location: Rowlins Army Depot
Customer: Foster Environmental
Customer Address: Moberly Mo
General Job Location: Grid
Tank Or Vessel No. / Name: Brick
Nature Of Material: Dirt
Description Of Work Planned: Cutting of Fabricate
Chemicals Introduced To Space: NA

TESTS

TIME	PERCENT LOWER EXPLOSION LIMIT	PERCENT OXYGEN	BENZENE (ppm)	TOLUENE (ppm)	XYLENE (ppm)	H_2S (ppm)	CO (ppm)	OTHERS ____ (ppm)	____ (ppm)	____ (ppm)	ATMOSPHERE CLASS	INITIAL
900	0%	21										

CHECK LIST

	Initial: Yes	Initial: Does Not Apply
All lines leading to and from confined space have been blinded or disconnected.	✓	
service disconnected or locked out.	✓	
All grounding and bonding wire in place.	✓	
All ignition sources have been isolated.	✓	
Breathing supply and alarms checked and are in proper condition.	✓	
The complete respiratory supply system has been checked and is in proper condition.	✓	
All safety harnesses and life lines checked and in proper condition.	✓	
Required protective clothing, gloves, boots, etc., being used.	✓	
Employees have been trained in the use, care, and limitations of their respiratory protective equipment.	✓	
Outside safety watch trained in emergency procedures and resuscitation.	✓	
Vessel contains leaded product.	✓	
All emergency systems such as air packs, fire extinguishers, backup breathing supply, alarms, etc., ready for use.	✓	
Special warning / caution signs posted.	✓	
Ventilation equipment in use.		✓
No employee with facial hair, eye glasses, or other gas tight seal obstructions will do work which requires a respirator, or act as emergency standby.	✓	
Employees will not wear contact lenses in an atmosphere where a respirator is required.	✓	

PERSONNEL PROTECTIVE EQUIPMENT

EYES
- ☐ Chemical Goggles
- ☐ Face Shield
- ☐ Safety Glasses

EXTREMITIES
- ☒ Hard Hat
- ☒ Gloves
- ☐ Boots ☐ PVC ☐ Neoprene
- ☐ Hoods ☐ PVC ☐ Neoprene
- ☒ Foot Coverings, Disposable ☐ Latex ☒ White Tyvek

BODY
- ☒ Environmental Suit: PVC Butyl
- ☐ Heavy Suit: ☐ PVC Neoprene
- ☐ Intermediate PVC Suit
- ☐ Light PVC Suit
- ☐ Tyvek Suit: ☐ White ☐ Yellow ☐ Saranex

RESPIRATORY
- ☐ Self-Contained Respirator
- ☐ Air Line Respirator
- ☐ Air Line W/Egress
- ☒ Cartridge Respirator
- Cartridge Type Organic

OTHER
- ☒ Hearing Protection
- ☒ Parachute Harness and Lifeline (Top Entry)
- ☐ Chest Harness and Lifeline (Side Entry)

Special Instructions:

Qualified Person: Timothy T Cook (Name Printed) Timothy T Cook (Signature) Date

Manager Date

FORM 9531-1B SEE REVERSE

INTERNATIONAL TECHNOLOGY CORPORATION

HOT WORK PERMIT

erating Area ASH LANDFILL Good for this date only 1/6 19 95

Specific vessel or equipment DRYER

Work to be done REPLACE FLANGES IN DRYER

TESTS

STATE EXACT LOCATION OF TEST	TIME	PERCENT LOWER EXPLOSION LIMIT	PERCENT OXYGEN	OTHERS		INITIAL
TMX-410	1100	0	21			TJC

CHECK LIST

	Initial Yes	Initial Does Not Apply
Operations/plant personnel have been informed of work to be performed	X	
anks/lines/valves are disconnected, blinded, or locked out.	X	
Equipment and all attached piping has been cleaned and purged with: (check blank) Water____ Steam____ Inert gas____ Air X	X	
Electrical service has been locked out and tagged.	X	
All grounding/bonding wire in place.	X	
Surrounding equipment and operations are safe for hot work.	X	
No open vessels or lines within 35 feet of hot work area.	X	
No combustible items within 35 feet of hot work area or covered with wetted tarpaulins.	X	
Fire Watch has been provided by Contractor.	X	
No flammable gases greater than 10% LEL in hot work area.	X	Ø
All requirements of ITCPRO 9531 for Confined Space Entry have been met and ITC Form 9531-1 has been completed and posted.	X	
If vessel contains leaded product, all requirements of ITCPRO 9531.3 have been met.		

PERSONNEL PROTECTIVE EQUIPMENT

EYES
- ☐ Chemical Goggles
- ☐ Face Shield
- ☒ Safety Glasses
- ☐ Welders Mask

BODY
- ☒ Environmental Suit: ☐ PVC ☐ Neoprene
- ☐ Heavy Suit: ☐ PVC ☐ Neoprene
- ☐ Light PVC Suit
- ☐ Yellow Tyvek Suit
- ☐ White Tyvek Suit

EXTREMITIES
- ☒ Hard Hat
- ☒ Gloves
- ☒ Boots ☐ PVC ☐ Neoprene
- ☐ Hoods ☐ PVC ☐ Neoprene
- ☒ Foot Coverings, Disposable

RESPIRATORY
- ☐ Self-Contained Respirator
- ☐ Hose Line Respirator
- ☐ Hose Line W/Egress
- ☐ Cartridge Respirator

Cartridge Type ____
- ☒ Dust Respirator

EQUIPMENT REQUIRED
- ☒ Fire Extinguisher
- ☐ Fire Blanket
- ☐ Charged Water Hose
- ☒ Combustible Gas Inst

Special Instructions:

Completed by: Tim Cook (Name Printed) [signature] (Signature)

Manager

ITC FORM 9571-1
CS/103-5-85

INSPECTIONS AND TESTS FOR ENTRY INTO CONFINED SPACES

Date _____
Job Number _____
Page _____ of _____

Division: [illegible] Division Location: [illegible]
Customer: [illegible] Customer Address: _____
General Job Location: [illegible] Tank Or Vessel No. Name: [illegible]
Nature Of Material: [illegible]
Description Of Work Planned: [illegible] Chemicals Introduced To Space: [illegible]

TESTS

TIME	PERCENT LOWER EXPLOSION LIMIT	PERCENT OXYGEN	BENZENE (ppm)	TOLUENE (ppm)	XYLENE (ppm)	H_2S (ppm)	CO (ppm)	OTHERS ____ (ppm)	OTHERS ____ (ppm)	OTHERS ____ (ppm)	ATMOSPHERE CLASS	INITIAL
	[illegible]	[illegible]										

CHECK LIST

	Initial Yes	Initial Does Not Apply
All lines leading to and from confined space have been blinded or disconnected.		
[illegible] service disconnected or locked out.	X	
All grounding and bonding wire in place.	X	
All ignition sources have been isolated.	X	
Breathing supply and alarms checked and are in proper condition.	X	
The complete respiratory supply system has been checked and is in proper condition.	X	
All safety harnesses and life lines checked and in proper condition.	X	
Required protective clothing, gloves, boots, etc., being used.	X	
Employees have been trained in the use, care, and limitations of their respiratory protective equipment.	X	
Outside safety watch trained in emergency procedures and resuscitation.	X	
Vessel contains leaded product.		X
All emergency systems such as air packs, fire extinguishers, backup breathing supply, alarms, etc., ready for use.	X	
Special warning / caution signs posted.		X
Ventilation equipment in use.		X
No employee with facial hair, eye glasses, or other gas tight seal obstructions will do work which requires a respirator, or act as emergency standby.	X	
Employees will not wear contact lenses in an atmosphere where a respirator is required.	X	

PERSONNEL PROTECTIVE EQUIPMENT

EYES
- ☐ Chemical Goggles
- ☐ Face Shield
- ☐ Safety Glasses

EXTREMITIES
- ☑ Hard Hat
- ☐ Gloves
- ☐ Boots ☐ PVC ☐ Neoprene
- ☐ Hoods ☐ PVC ☐ Neoprene
- ☐ Foot Coverings, Disposable ☐ Latex ☐ White Tyvek

BODY
- ☐ Environmental Suit: ☐ PVC ☐ Butyl
- ☐ Heavy Suit: ☐ PVC ☐ Neoprene
- ☐ Intermediate PVC Suit
- ☐ Light PVC Suit
- ☐ Tyvek Suit: ☐ White ☑ Yellow ☐ Saranex

RESPIRATORY
- ☐ Self-Contained Respirator
- ☐ Air Line Respirator
- ☐ Air Line W/Egress
- ☑ Cartridge Respirator
- Cartridge Type [illegible]

OTHER
- ☐ Hearing Protection
- ☐ Parachute Harness and Lifeline (Top Entry)
- ☐ Chest Harness and Lifeline (Side Entry)

Special Instructions: Bud [illegible] Tim Cook [illegible] Eaton Bros Harrell will be Watch

Qualified Person: Tim Cook [signature]
Name Printed Signature

FORM 9531-1B SEE REVERSE

TECHNOLOGY CORPORATION

HOT WORK PERMIT

Operating Area [illegible] Good for this date only [illegible] 19 95

Specific vessel or equipment [illegible]

Work to be done [illegible]

TESTS

STATE EXACT LOCATION OF TEST	TIME	PERCENT LOWER EXPLOSION LIMIT	PERCENT OXYGEN	OTHERS		INITIAL
[illegible]	610	0	210			[illegible]

CHECK LIST

	Initial: Yes	Initial: Does Not Apply
Operations/plant personnel have been informed of work to be performed	✓	
All tanks/lines/valves are disconnected, blinded, or locked out.	✓	
E[illegible]ment and all attached piping has been cleaned and purged with: (check blank) Water____ Steam____ Inert gas____ Air		✓
Electrical service has been locked out and tagged.	✓	
All grounding/bonding wire in place.	✓	
Surrounding equipment and operations are safe for hot work.	✓	
No open vessels or lines within 35 feet of hot work area.	✓	
No combustible items within 35 feet of hot work area or covered with wetted tarpaulins.	✓	
Fire Watch has been provided by Contractor.	✓	
No flammable gases greater than 10% LEL in hot work area.	✓	
All requirements of ITCPRO 9531 for Confined Space Entry have been met and ITC Form 9531-1 has been completed and posted.		✓
If vessel contains leaded product, all requirements of ITCPRO 9531.3 have been met.		✓

PERSONNEL PROTECTIVE EQUIPMENT

EYES
- ☐ Chemical Goggles
- ☑ Face Shield
- ☐ Safety Glasses
- ☐ Welders Mask

BODY
- ☐ Environmental Suit: ☐ [illegible]
- ☐ Heavy Suit: ☐ PVC ☐ [illegible]
- ☐ Light PVC Suit
- ☑ Yellow Tyvek Suit
- ☐ White Tyvek Suit

EXTREMITIES
- ☑ Hard Hat
- ☑ Gloves
- ☑ Boots ☐ PVC ☐ Neoprene
- ☑ Hoods ☐ PVC ☐ Neoprene
- ☑ Foot Coverings, Disposable

RESPIRATORY
- ☐ Self-Contained Respirator
- ☐ Hose Line Respirator
- ☐ Hose Line W/Egress
- ☑ Cartridge Respirator

Cartridge Type Yellow
- ☐ Dust Respirator

EQUIPMENT REQUIRED
- ☑ Fire Extinguisher
- ☐ Fire Blanket
- ☐ Charged Water Hose
- ☐ Combustible Gas In[illegible]

Special Instructions: N/A

Completed by: Wayne Raulerson (Name Printed) W. Raulerson (Signature)

[illegible] (Manager)

ITC FORM 9571-1
CS/103-5-85

TECHNOLOGY CORPORATION

HOT WORK PERMIT

Operating area Bag House Good for this date only 1-14-95 19 95

Specific vessel or equipment

Work to be done

TESTS

STATE EXACT LOCATION OF TEST	TIME	PERCENT LOWER EXPLOSION LIMIT	PERCENT OXYGEN	OTHERS		INITIAL
	1000	0%	21%			KIM

CHECK LIST

	Initial: Yes	Initial: Does Not Apply
Operations/plant personnel have been informed of work to be performed	✓	
All tanks, lines, valves are disconnected, blinded, or locked out.	✓	
Equipment and all attached piping has been cleaned and purged with: (check blank) Water___ Steam___ Inert gas___ Air		✓
Electrical service has been locked out and tagged.	✓	
All grounding/bonding wire in place.	✓	
Surrounding equipment and operations are safe for hot work.	✓	
No open vessels or lines within 35 feet of hot work area.	✓	
No combustible items within 35 feet of hot work area or covered with wetted tarpaulins.	✓	
Fire Watch has been provided by Contractor.	✓	
No flammable gases greater than 10% LEL in hot work area.	✓	
All requirements of ITCPRO 9531 for Confined Space Entry have been met and ITC Form 9531-1 has been completed and posted.		✓
If vessel contains leaded product, all requirements of ITCPRO 9531.3 have been met.	✓	

PERSONNEL PROTECTIVE EQUIPMENT

EYES
- ☐ Chemical Goggles
- ☐ Face Shield
- ☐ Safety Glasses
- ☐ Welders Mask

BODY
- ☐ Environmental Suit
- ☑ Heavy Suit: ☐ PVC ☐ Neoprene
- ☐ Light PVC Suit
- ☐ Yellow Tyvek Suit
- ☐ White Tyvek Suit

EXTREMITIES
- ☑ Hard Hat
- ☑ Gloves
- ☑ Boots ☐ PVC ☑ Neoprene
- ☐ Hoods ☐ PVC ☐ Neoprene
- ☐ Foot Coverings, Disposable

RESPIRATORY
- ☐ Self-Contained Respirator
- ☐ Hose Line Respirator
- ☐ Hose Line W/Egress
- ☑ Cartridge Respirator

Cartridge Type ___
- ☐ Dust Respirator

EQUIPMENT REQUIRED
- ☑ Fire Extinguisher
- ☐ Fire Blanket
- ☐ Charged Water Hose
- ☐ Combustible Gas Indicator

Special Instructions:

Completed by: KENNETH McKINNEY (Name Printed) Kenneth McKinney (Signature)

Manager

ITC FORM 9571-1
CS/103-5-85

INTERNATIONAL ECOLOGY CORPORATION

INSPECTIONS AND TESTS FOR ENTRY INTO CONFINED SPACES

Date 1-7 Jan
Job Number Seneca Army
Page 1 of 1

Division: Thermal
Division Location: Seneca Army Depot
Customer: Fortech Environmental
Customer Address: Romulus Army Depot
General Job Location: Dryer
Tank Or Vessel No. Name: Dryer
Describe Material In Space:
Description Of Work Planned: Install Bolts
Chemicals Introduced Into Space: None

TIME	PERCENT LOWER EXPLOSION LIMIT	PERCENT OXYGEN	BENZENE (ppm)	TOLUENE (ppm)	XYLENE (ppm)	TCE (ppm)	CO (ppm)	____ (ppm)	____ (ppm)	____ (ppm)	ATMOSPHERE CLASS	INITIAL
	0	21										

CHECK LIST

	Yes	No	(Does Not Apply)
Lines leading to and from confined space [illegible]			
[illegible]			
All equipment properly [illegible]			
Ventilation, lighting and emergency communication equipment [illegible]			
Ground Fault Circuit Interrupter (GFCI) protection [illegible]			
Ignition sources have been isolated			
Heating supply and electric checked and in proper condition			
Personnel respiratory supply system has been checked and in proper condition			
Safety harnesses and lifelines checked and in proper condition			
Required protective clothing, gloves, boots, etc. being used			
Employees have been trained in the use, care, and limitations of the respirator protective equipment			
Rescue safety watch trained in emergency procedures and equipment			
Vessel contain lesser hazard			
Emergency systems such as air hose, [illegible] available			
Heating supply electric disconnected to use			
Special warning caution signs posted			
Ventilation equipment in use			
Is employee with legs not over glasses or the use of the contaminated [illegible]			
Is work which requires a respirator [illegible]			
Employees with no visible [illegible]			
Respirator if required			

PERSONNEL PROTECTIVE EQUIPMENT

- EYES
  - ☐ Chemical Goggles
  - ☐ Face Shield
  - ☐ Safety Glasses
- EXTREMITIES
  - ☐ Rubber
  - ☐ Gloves
  - ☐ Boots
  - ☐ Hood
  - ☒ Fall Overhead Disposable
- BODY
  - ☐ Encapsulating Suit
  - ☐ Heavy Suit
  - ☐ Intermediate Suit
  - ☐ Light Suit
  - ☐ Travel Suit
- BREATHING TYPE
  - ☐ Self-Contained Apparatus
  - ☐ Air Line Respirator
  - ☐ Air Line Mask
  - ☐ Cartridge Respirator
  - ☐ Cartridge Type: Organic
- OTHER
  - ☐ Hearing Protection
  - ☐ Harnesses and Lifeline Tied Both
  - ☐ Safety Harnesses and Lifeline Tied Both

Other Equipment: Maintain Radio Contact ∇ Visual

Name of Person: Tim Cook
Signature
Date: 1/17/95

INTERNATIONAL TECHNOLOGY CORPORATION

HOT WORK PERMIT

rating Area Pugmill Dryer Good for this date only 17 Jan 19 95

Specific vessel or equipment Pugmill + outside Dryer

Work to be done Welding

TESTS

STATE EXACT LOCATION OF TEST	TIME	PERCENT LOWER EXPLOSION LIMIT	PERCENT OXYGEN	OTHERS		INITIAL
Pugmill	11AM	0	21			

CHECK LIST

	Initial: Yes	Initial: Does Not Apply
Operations/plant personnel have been informed of work to be performed	X	
All tanks/lines/valves are disconnected, blinded, or locked out.	X	
Equipment and all attached piping has been cleaned and purged with: (check blank) Water___ Steam___ Inert gas___ Air	X	
Electrical service has been locked out and tagged.	X	
All grounding/bonding wire in place.	X	
Surrounding equipment and operations are safe for hot work.	X	
No open vessels or lines within 35 feet of hot work area.	X	
No combustible items within 35 feet of hot work area or covered with wetted tarpaulins.	X	
Fire Watch has been provided by Contractor.	X	
No flammable gases greater than 10% LEL in hot work area.	X	
All requirements of ITCPRO 9531 for Confined Space Entry have been met and ITC Form 9531-1 has been completed and posted.		
If vessel contains leaded product, all requirements of ITCPRO 9531.3 have been met.		

PERSONNEL PROTECTIVE EQUIPMENT

EYES
- ☐ Chemical Goggles
- ☐ Face Shield
- ☐ Safety Glasses
- ☒ Welders Mask

BODY
- ☐ Environmental Suit
- ☐ Heavy Suit: ☐ PVC ☐ Neoprene
- ☐ Light PVC Suit
- ☐ Yellow Tyvek Suit
- ☐ White Tyvek Suit

Fire Resistant Suit

EXTREMITIES
- ☐ Hard Hat
- ☐ Gloves
- ☐ Boots ☐ PVC ☐ Neoprene
- ☐ Hoods ☐ PVC ☐ Neoprene
- ☐ Foot Coverings, Disposable

RESPIRATORY
- ☐ Self-Contained Respirator
- ☐ Hose Line Respirator
- ☐ Hose Line W/Egress
- ☒ Cartridge Respirator

Cartridge Type Organic
- ☐ Dust Respirator

EQUIPMENT REQUIRED
- ☐ Fire Extinguisher
- ☐ Fire Blanket
- ☐ Charged Water Hose
- ☐ Combustible Gas Inst.

Special Instructions: Use Fire Resistant Suit

Completed by: Tim Cook (Name Printed) Tim Cook (Signature)

Manager

ITC FORM 9571-1
CS/103-5-85

TECHNOLOGY CORPORATION

HOT WORK PERMIT

C ating Area Shaker + Hammer mill Good for this date only 1-20 19 95

Specific vessel or equipment Hammer mill

Work to be done constructing platform on side of hammer mill

TESTS

STATE EXACT LOCATION OF TEST	TIME	PERCENT LOWER EXPLOSION LIMIT	PERCENT OXYGEN	OTHERS		INITIAL
Control room side of plant	1030	0%	20.39			CIN

CHECK LIST

	Initial: Yes	Initial: Does Not Apply
Operations/plant personnel have been informed of work to be performed	✓	
nks/lines/valves are disconnected, blinded, or locked out.	✓	
Equipment and all attached piping has been cleaned and purged with: (check blank) Water___ Steam___ Inert gas___ Air		✓
Electrical service has been locked out and tagged.	✓	
All grounding/bonding wire in place.	✓	
Surrounding equipment and operations are safe for hot work.	✓	
No open vessels or lines within 35 feet of hot work area.	✓	
No combustible items within 35 feet of hot work area or covered with wetted tarpaulins.	✓	
Fire Watch has been provided by Contractor.	✓	
No flammable gases greater than 10% LEL in hot work area.	✓	
All requirements of ITCPRO 9531 for Confined Space Entry have been met and ITC Form 9531-1 has been completed and posted.	✓	
If vessel contains leaded product, all requirements of ITCPRO 9531.3 have been met.	✓	

PERSONNEL PROTECTIVE EQUIPMENT

EYES
- ☐ Chemical Goggles
- ☐ Face Shield
- ☐ Safety Glasses
- ☐ Welders Mask

BODY
- ☐ Environmental Suit
- ☒ Heavy Suit: ☐ PVC ☐ Neoprene
- ☐ Light PVC Suit
- ☐ Yellow Tyvek Suit
- ☐ White Tyvek Suit

EXTREMITIES
- ☒ Hard Hat
- ☒ Gloves
- ☐ Boots ☐ PVC ☐ Neoprene
- ☐ Hoods ☐ PVC ☐ Neoprene
- ☐ Foot Coverings, Disposable

RESPIRATORY
- ☐ Self-Contained Respirator
- ☐ Hose Line Respirator
- ☐ Hose Line W/Egress
- ☒ Cartridge Respirator

Cartridge Type ___
- ☐ Dust Respirator

EQUIPMENT REQUIRED
- ☒ Fire Extinguisher
- ☐ Fire Blanket
- ☐ Charged Water Hose
- ☐ Combustible Gas Monitor

Special Instructions: _____

Completed by: _____ _____
Name Printed Signature

_____
Manager

ITC FORM 9571-1
CS/103-5-85

INTERNATIONAL TECHNOLOGY CORPORATION

INSPECTIONS AND TESTS FOR ENTRY INTO CONFINED SPACES

Date 1-20-95
Job Number 519200
Page 1 of 1

Division: C+R
Division Location:
Customer: USACE
Customer Address:
General Job Location: Dryer
Tank Or Vessel No. / Name: Kiln
Describe Material In Space: Empty Kiln
Description Of Work Planned: Replace Nut + Bolt
Chemicals Introduced Into Space: None

TESTS

TIME	PERCENT LOWER EXPLOSION LIMIT	PERCENT OXYGEN	BENZENE (ppm)	TOLUENE (ppm)	XYLENE (ppm)	H_2S (ppm)	CO (ppm)	OTHERS ____ (ppm)	OTHERS ____ (ppm)	OTHERS ____ (ppm)	ATMOSPHERE CLASS	INITIAL
1000	0%	20.7%	—	—	—	—	—				C	KJM

CHECK LIST

	Initial: Yes	Initial: Does Not Apply
All lines leading to and from confined space have been blinded or disconnected.	✓	
Electrical service disconnected or locked out.	✓	
All grounding and bonding cables in place.		✓
All lighting, fittings, and extension cords are approved explosion proof equipment.		✓
Ground Fault Circuit Indicator (GFCI) checked and functioning.		✓
All ignition sources have been isolated.	✓	
Breathing supply and alarms checked and are in proper condition.		✓
The complete respiratory supply system has been checked and is in proper condition.		✓
All safety harnesses and life lines checked and in proper condition.	✓	
Required protective clothing, gloves, boots, etc., being used.	✓	
Employees have been trained in the use, care, and limitations of their respiratory protective equipment.	✓	
Outside safety watch trained in emergency procedures and resuscitation.	✓	
Vessel contains leaded product.	✓	
All emergency systems such as air packs, fire extinguishers, backup breathing supply, alarms, etc., ready for use.	✓	
Special warning / caution signs posted.	✓	
Ventilation equipment in use.		✓
No employee with facial hair, eye glasses, or other gas tight seal obstructions will do work which requires a respirator, or act as emergency standby.	✓	
Employees will not wear contact lenses in an atmosphere where a respirator is required.	✓	

PERSONNEL PROTECTIVE EQUIPMENT

EYES
- ☐ Chemical Goggles
- ☐ Face Shield
- ☐ Safety Glasses

EXTREMITIES
- ☑ Hard Hat
- ☑ Gloves
- ☑ Boots ☐ PVC ☑ Neoprene
- ☐ Hoods ☐ PVC ☐ Neoprene
- ☐ Foot Coverings, Disposable ☐ Latex ☐ White Tyvek

BODY
- ☐ Encapsulating Suit: ☐ PVC ☐ Butyl
- ☐ Heavy Suit: ☐ PVC ☐ Neoprene
- ☐ Intermediate Suit: ☐ PVC ☐ Other
- ☐ Light Suit: ☐ PVC ☐ Other
- ☑ Tyvek Suit: ☐ White ☑ Yellow ☑ Saranex

RESPIRATORY
- ☐ Self-Contained Respirator
- ☐ Air Line Respirator
- ☐ Air Line W/Egress
- ☑ Cartridge Respirator

Cartridge Type ____

OTHER
- ☐ Hearing Protection
- ☑ Parachute Harness and Lifeline (Top Entry)
- ☐ Chest Harness and Lifeline (Side Entry)

Instructions: ____

Qualified Person: ____ Name Printed ____ Signature ____ Date

CONTINUED ON REVERSE

Manager ____ Date

7-95 (1)(A)

Operating Area MAINTENANCE AREA Good for this date only 1/26 19 95

Specific vessel or equipment TRACKHOE + LOADER

Work to be done WELDING BREATHING AIR BRACKETS TO EQUIPMENT

TESTS

STATE EXACT LOCATION OF TEST	TIME	PERCENT LOWER EXPLOSION LIMIT	PERCENT OXYGEN	OTHERS		INITIAL

CHECK LIST

	Initial: Yes	Initial: Does Not Apply
Operations/plant personnel have been informed of work to be performed	X	
All tanks/lines/valves are disconnected, blinded, or locked out.		X
Equipment and all attached piping has been cleaned and purged with: (check blank) Water ____ Steam ____ Inert gas ____ Air ____		X
Electrical service has been locked out and tagged.		X
All grounding/bonding wire in place.	X	X
Surrounding equipment and operations are safe for hot work.	X	
No open vessels or lines within 35 feet of hot work area.	X	
No combustible items within 35 feet of hot work area or covered with wetted tarpaulins.	X	
Fire Watch has been provided by Contractor.	X	
No flammable gases greater than 10% LEL in hot work area.	X	
All requirements of ITCPRO 9531 for Confined Space Entry have been met and ITC Form 9531-1 has been completed and posted.		X
If vessel contains leaded product, all requirements of ITCPRO 9531.3 have been met.		

PERSONNEL PROTECTIVE EQUIPMENT

EYES
- ☐ Chemical Goggles
- ☐ Face Shield
- ☐ Safety Glasses
- ☒ Welders Mask

BODY
- ☐ Environmental Suit: ☐ PVC ☐ Butyl
- ☐ Heavy Suit: ☐ PVC ☐ Neoprene
- ☐ Light PVC Suit
- ☐ Yellow Tyvek Suit
- ☐ White Tyvek Suit

EXTREMITIES
- ☒ Hard Hat
- ☒ Gloves
- ☐ Boots ☐ PVC ☐ Neoprene
- ☐ Hoods ☐ PVC ☐ Neoprene
- ☐ Foot Coverings, Disposable

RESPIRATORY
- ☐ Self-Contained Respirator
- ☐ Hose Line Respirator
- ☐ Hose Line W/Egress
- ☐ Cartridge Respirator

Cartridge Type ____
- ☐ Dust Respirator

EQUIPMENT REQUIRED
- ☒ Fire Extinguisher
- ☐ Fire Blanket
- ☐ Charged Water Hose
- ☐ Combustible Gas Indicator

Special Instructions: ____

Completed by: GREG McELROY (Name Printed) ____ (Signature) 1/26/95 (Date)

____ Manager

ITC FORM 9571-1
7/03-5-85

'95-1

Operating Area Thermal Area. Good for this date only 26 JAN 1995

Specific vessel or equipment Screen

Work to be done Weld Hole in screen ; Cut bearing off Pugmill

TESTS

STATE EXACT LOCATION OF TEST	TIME	PERCENT LOWER EXPLOSION LIMIT	PERCENT OXYGEN	OTHERS		INITIAL
N/A						

CHECK LIST

	Initial: Yes	Initial: Does Not Apply
Operations/plant personnel have been informed of work to be performed.	X	
All tanks/lines/valves are disconnected, blinded, or locked out.	X	
Equipment and all attached piping has been cleaned and purged with: (check blank) Water____ Steam____ Inert gas____ Air____	X	
Electrical service has been locked out and tagged.	X	
All grounding/bonding wire in place.	X	
Surrounding equipment and operations are safe for hot work.	X	
No open vessels or lines within 35 feet of hot work area.	X	
No combustible items within 35 feet of hot work area or covered with wetted tarpaulins.	X	
Fire Watch has been provided by Contractor.	X	
No flammable gases greater than 10% LEL in hot work area.	X	
All requirements of ITCPRO 9531 for Confined Space Entry have been met and ITC Form 9531-1 has been completed and posted.		N/A
If vessel contains leaded product, all requirements of ITCPRO 9531.3 have been met.		

PERSONNEL PROTECTIVE EQUIPMENT

EYES
- ☐ Chemical Goggles
- ☐ Face Shield
- ☒ Safety Glasses
- ☒ Welders Mask

BODY
- ☐ Environmental Suit: ☐ PVC ☐ Suit
- ☐ Heavy Suit: ☐ PVC ☐ Neoprene
- ☐ Light PVC Suit
- ☒ Yellow Tyvek Suit
- ☐ White Tyvek Suit

EXTREMITIES
- ☒ Hard Hat
- ☒ Gloves
- ☒ Boots ☐ PVC ☐ Neoprene
- ☐ Hoods ☐ PVC ☐ Neoprene
- ☒ Foot Coverings, Disposable

RESPIRATORY
- ☐ Self-Contained Respirator
- ☐ Hose Line Respirator
- ☐ Hose Line W/Egress
- ☒ Cartridge Respirator

Cartridge Type ____
- ☐ Dust Respirator

EQUIPMENT REQUIRED
- ☒ Fire Extinguisher
- ☐ Fire Blanket
- ☐ Charged Water Hose
- ☐ Combustible Gas Indicator

Special Instructions:

Completed by: Bill Gibson
Name Printed

Signature

Date

Manager

ITC FORM 9571-1
7/03-5-85

Operating Area LHD Unit Good for this date only 2-18 19 95

Specific vessel or equipment Pugmill

'ork to be done fab new door & install

TESTS

STATE EXACT LOCATION OF TEST	TIME	PERCENT LOWER EXPLOSION LIMIT	PERCENT OXYGEN	OTHERS		INITIAL
around Pug mill	830	0	21.9			T.M

CHECK LIST

	Initial: Yes	Initial: Does Not Apply
Operations/plant personnel have been informed of work to be performed	T.M	
All tanks/lines/valves are disconnected, blinded, or locked out	T.M	
Equipment and all attached piping has been cleaned and purged with: (check blank) Water ____ Steam ____ Inert gas ____ Air ____		T.M
...ctrical service has been locked out and tagged	T.M	
All grounding/bonding wire in place	T.M	
Surrounding equipment and operations are safe for hot work	T.M	
No open vessels or lines within 35 feet of hot work area	T.M	
No combustible items within 35 feet of hot work area or covered with wetted tarpaulins	T.M	
Fire Watch has been provided by Contractor		T.M
No flammable gases greater than 10% LEL in hot work area	T.M	
All requirements of ITCPRO 9531 for Confined Space Entry have been met and ITC Form 9531-1 has been completed and posted		T.M
If vessel contains leaded product, all requirements of ITCPRO 9531.3 have been met		

PERSONNEL PROTECTIVE EQUIPMENT

EYES
- ☐ Chemical Goggles
- ☒ Face Shield
- ☒ Safety Glasses
- ☒ Welders Mask

BODY
- ☐ Environmental Suit: ☐ PVC ☐ Bur
- ☐ Heavy Suit: ☐ PVC ☐ Neoprene
- ☐ Light PVC Suit
- ☐ Yellow Tyvek Suit
- ☒ White Tyvek Suit

EXTREMITIES
- ☒ Hard Hat
- ☒ Gloves
- ☒ Boots ☐ PVC ☐ Neoprene
- ☒ Hoods ☐ PVC ☐ Neoprene
- ☐ Foot Coverings, Disposable

RESPIRATORY
- ☐ Self-Contained Respirator
- ☐ Hose Line Respirator
- ☐ Hose Line W/Egress
- ☐ Cartridge Respirator

Cartridge Type ____
- ☐ Dust Respirator

EQUIPMENT REQUIRED
- ☒ Fire Extinguisher
- ☒ Fire Blanket
- ☐ Charged Water Hose
- ☐ Combustible Gas Indicator

pecial Instructions:

ompleted by: Tim Meade (Name Printed) Tim Meade (Signature) 8-11-95 (Date)

Manager

C FORM 9571-1
/103-5-85

ATTACHMENT 4

LOCKOUT/TAGOUT FOR ELECTRICAL EQUIPMENT

Job: SEAD

Device: LHD UNIT

Location: ash landfill

Authorized Person: [illegible]

PREPARATION FOR SHUTDOWN

1. Determine power type and shutoff location
2. Determine if there is more than one energy source
3. Determine magnitude of power (voltage)
4. Notify affected employees in the area that equipment will be under lockout for maintenance.
5. Shutoff power sources to machine.

LOCKOUT/TAGOUT

6. Lock and tag main power switches in the OFF position, remove fuses.
7. Verify that no power is available to the equipment using a voltmeter, if necessary.
8. Drain devices such as capacitor banks.
9. Verify that these devices have no stored energy by use of the voltmeter.
10. Repair equipment.

RETURN TO SERVICE

11. Be sure all connections are made and any unused tools and equipment are removed.
12. Remove lock if necessary to verify machine is repaired. The maintenance employee, while verifying the machine is repaired cannot leave the immediate area.
13. Remove tag from machine.
14. Notify employees in the area that the equipment is available.

Authorized Person:

Site Supervisor: [illegible] 2-18-95

IT Corporation is a wholly owned subsidiary of International Technology Corporation

954-5-92

INTERNATIONAL TECHNOLOGY CORPORATION

Page __ of __

ENTRY PERMIT
PERMIT-REQUIRED CONFINED SPACE (PRCS)

Procedure No. HS300
Revision No. 0
Date 03/01/93
Page 21a of 21

ATTACHMENT 3

Division/Location SEDA Ash Landfill Job No. 51GR00
Customer USACE Address Romulus NY
Location of Job Romulus NY Identity of PRCS DRYER
Describe Hazards of PRCS (Chemical, Physical) blades inside Dryer

Chemical Introduced into Space DCE

Purpose This Permit Authorized To replace belt in Tube

CHECKLIST	YES	DOES NOT APPLY
All lines leading to and from confined space have been blinded or disconnected	X	
Electrical service disconnected or locked out	X	
All grounding and bonding cables in place	X	
All lighting, fittings, power equipment, and extension cords are explosion-proof		X
Ground Fault Circuit Indicator (GFCI) checked and functioning		X
All ignition sources have been isolate	X	
All respiratory equipment and alarms checked and functional	X	
All safety harnesses and life lines checked	X	
All required PPE checked and in use	X	
All entrants are confined space trained	X	
All entrants are trained in the use, care, and limitations of respirators and PPE	X	
Attendant trained in emergency procedures	X	
Attendant(s) trained in rescue procedures	X	
Outside rescue service will be used and they have been notified of this entry	X	X
Appropriate rescue equipment available and checked	X	
Ventilation system in use and effective	X	
Entrant(s) can achieve a gas-tight seal with respirator	X	
Entrant(s) are not wearing contact lenses	X	
All tests have been completed and indicate that entrance requirements have been met	X	
Appropriate warning signs have been posted and unauthorized personnel have been excluded from the PRCS and area	X	

IF THE ANSWER TO ANY OF THE ABOVE QUESTIONS IS NO, ENTRY IS NOT PERMITTED.

PERSONAL PROTECTIVE EQUIPMENT (Circle)

EYE/FACE
Chemical Goggles
Face Shield
Safety Glasses

EXTREMITIES
Hard Hat
Gloves (Material _____)
Hoods
Boots (Material _____)
Booties

BODY
Suit (Level C, Material _____)

RESPIRATORY
SCBA
Air Line
Egress System
Air Purifying (Cartridge _____)
Powered Air Purifying (Cartridge _____)

OTHER
Hearing Protection
Harness & Lifeline
Chest or Parachute

RESCUE EQUIPMENT
Mechanical Extraction Device
First Aid Kit
SCBA
Other (Specify) _____

NON-IT RESCUE TEAM
Instructions to Surrogan Rescue
Phone 911

COMMUNICATION
Lifeline "Tug" Signals (See HASP)
Air Powered Horn Signals (See HASP)
Other _____

OTHER PERMITS ISSUED FOR WORK IN PRCS: _____

OTHER HAZARD CONTROL PROCEDURES OR INSTRUCTIONS: _____

2-21

INTERNATIONAL TECHNOLOGY CORPORATION

TEST DATA
Oxygen, Flammability and Toxic Contaminant(s)

Page __ of __ Procedure No. HS300
Revision No. 0
Date 03/01/93
Page 21b of 21

Time	Percent Oxygen	Percent LEL	PEG	PEG	PEG	PEG	PEG	Initials	Comments
340	21	0							

AUTHORIZED ENTRANTS
Wayne Rackerson

AUTHORIZED ATTENDANTS
Tim Cook

RESCUE PERSONNEL
DASE Fire Dept.

Diagram the confined space. Indicate location of manways and ventilators. Indicate location(s) where tests conducted.

)(- Manway
= - Ventilator
X - Test Location

ACCEPTABLE ENTRY CONDITIONS

1) Entry Permit Completely Filled Out
2) Oxygen between 20-23.5%
3) Combustible Gases Below 10% LEL
4) Permissible Levels of Toxic Gases (List)
5) Other

PRCS SAFE FOR ENTRY

DATE/TIME 2 / 19 NAME ENTRY SUPERVISOR Tim Cook SIGNATURE

CURRENT ENTRY SUPERVISOR (IF DIFFERENT) [illegible]

ENTRY PERMIT EXPIRES DATE/TIME 2 / 19 (No longer than 1 shift) 5 30 PM

ENTRY PERMIT CANCELLED

DATE/TIME ___/___ SIGNATURE

REASON (✓) ___ Work Complete ___ Authorized Conditions not met ___ Incident

DESCRIBE PROBLEMS DURING ENTRY AND RESOLUTION

NONE

RECLASSIFICATION TO NON-PERMIT-REQUIRED CONFINED SPACE
Describe hazard removal methods, without use of ventilation.

TESTING VERIFICATION SHOWN AT TIME [illegible] ON TEST DATA CHART ABOVE.

DATE/TIME ___/___ ENTRY SUPERVISOR SIGNATURE

REVIEWED BY [illegible] DATE 2/26/95

2-32

Operating Area LHD UNIT Good for this date only 2-19 19 95

Specific vessel or equipment Dryer

Work to be done Cut off Belts

TESTS

STATE EXACT LOCATION OF TEST	TIME	PERCENT LOWER EXPLOSION LIMIT	PERCENT OXYGEN	OTHERS		INITIAL
around outside of Dryer	840	0	21.4			T.M

CHECK LIST

	Initial: Yes	Initial: Does Not Apply
Operations/plant personnel have been informed of work to be performed	T.M	
All tanks/lines/valves are disconnected, blinded, or locked out.	T.M	
Equipment and all attached piping has been cleaned and purged with: (check blank) Water___ Steam___ Inert gas___ Air___		T.M
Electrical service has been locked out and tagged.	T.M	
All grounding/bonding wire in place.	T.M	
Surrounding equipment and operations are safe for hot work.	T.M	
No open vessels or lines within 35 feet of hot work area.	T.M	
No combustible items within 35 feet of hot work area or covered with wetted tarpaulins.	T.M	
Fire Watch has been provided by Contractor.		T.M
No flammable gases greater than 10% LEL in hot work area.	T.M	
All requirements of ITCPRO 9531 for Confined Space Entry have been met and ITC Form 9531-1 has been completed and posted.		T.M
If vessel contains leaded product, all requirements of ITCPRO 9531.3 have been met.		

PERSONNEL PROTECTIVE EQUIPMENT

EYES
- ☐ Chemical Goggles
- ☐ Face Shield
- ☒ Safety Glasses
- ☒ Welders Mask

BODY
- ☐ Environmental Suit: ☐ PVC ☐ Suit
- ☐ Heavy Suit: ☐ PVC ☐ Neoprene
- ☐ Light PVC Suit
- ☐ Yellow Tyvek Suit
- ☒ White Tyvek Suit

EXTREMITIES
- ☒ Hard Hat
- ☒ Gloves
- ☒ Boots ☐ PVC ☐ Neoprene
- ☐ Hoods ☐ PVC ☐ Neoprene
- ☒ Foot Coverings, Disposable

RESPIRATORY
- ☐ Self-Contained Respirator
- ☐ Hose Line Respirator
- ☐ Hose Line W/Egress
- ☒ Cartridge Respirator

Cartridge Type _____
- ☐ Dust Respirator

EQUIPMENT REQUIRED
- ☒ Fire Extinguisher
- ☐ Fire Blanket
- ☐ Charged Water Hose
- ☐ Combustible Gas Indicator

Special Instructions:

Completed by: Tim Meade (Name Printed) Tim Meade (Signature) 2-19-95 (Date)

Manager

ITC FORM 9571-1
7103-5-85

ATTACHMENT 4

LOCKOUT/TAGOUT FOR ELECTRICAL EQUIPMENT

Job: SEAD 2/19/95

Device: CHD Unit

Location: ash landfill

Authorized Person: Wayne Kaulerson

PREPARATION FOR SHUTDOWN

1. Determine power type and shutoff location
2. Determine if there is more than one energy source
3. Determine magnitude of power (voltage)
4. Notify affected employees in the area that equipment will be under lockout for maintenance.
5. Shutoff power sources to machine.

LOCKOUT/TAGOUT

6. Lock and tag main power switches in the OFF position, remove fuses.
7. Verify that no power is available to the equipment using a voltmeter, if necessary.
8. Drain devices such as capacitor banks.
9. Verify that these devices have no stored energy by use of the voltmeter.
10. Repair equipment.

RETURN TO SERVICE

11. Be sure all connections are made and any unused tools and equipment are removed.
12. Remove lock if necessary to verify machine is repaired. The maintenance employee, while verifying the machine is repaired cannot leave the immediate area.
13. Remove tag from machine.
14. Notify employees in the area that the equipment is available.

Authorized Person:

Site Supervisor: [signature]

2-78

Operating Area LTTD Primary Treatment Skid Good for this date only 02/20 1995

Specific vessel or equipment Screen

Work to be done Weld Knock Down Plate to Screen

TESTS

STATE EXACT LOCATION OF TEST	TIME	PERCENT LOWER EXPLOSION LIMIT	PERCENT OXYGEN	OTHERS		INITIAL
inside Screen grate +35' radius	2030	0%	21%			Hop

CHECK LIST

	Initial: Yes	Initial: Does Not Apply
Operations/plant personnel have been informed of work to be performed	Hop	
All tanks/lines/valves are disconnected, blinded, or locked out.	Hop	
Equipment and all attached piping has been cleaned and purged with: (check blank) Water___ Steam___ Inert gas___ Air___		Hop
Electrical service has been locked out and tagged.	Hop	
All grounding/bonding wire in place.	Hop	
Surrounding equipment and operations are safe for hot work.	Hop	
No open vessels or lines within 35 feet of hot work area.		Hop
No combustible items within 35 feet of hot work area or covered with wetted tarpaulins.	Hop	
Fire Watch has been provided by Contractor.	Hop	
No flammable gases greater than 10% LEL in hot work area.	Hop	
All requirements of ITCPRO 9531 for Confined Space Entry have been met and ITC Form 9531-1 has been completed and posted.		Hop
If vessel contains leaded product, all requirements of ITCPRO 9531.3 have been met.		

PERSONNEL PROTECTIVE EQUIPMENT

EYES
- ☐ Chemical Goggles
- ☐ Face Shield
- ☐ Safety Glasses
- ☐ Welders Mask

BODY
- ☐ Environmental Suit: ☐ PVC ☐ Bu
- ☐ Heavy Suit: ☐ PVC ☐ Neoprene
- ☐ Light PVC Suit
- ☐ Yellow Tyvek Suit
- ☐ White Tyvek Suit

EXTREMITIES
- ☐ Hard Hat
- ☐ Gloves
- ☐ Boots ☐ PVC ☐ Neoprene
- ☐ Hoods ☐ PVC ☐ Neoprene
- ☐ Foot Coverings, Disposable

RESPIRATORY
- ☐ Self-Contained Respirator
- ☐ Hose Line Respirator
- ☐ Hose Line W/Egress
- ☐ Cartridge Respirator

Cartridge Type ____
- ☐ Dust Respirator

EQUIPMENT REQUIRED
- ☐ Fire Extinguisher
- ☐ Fire Blanket
- ☐ Charged Water Hose
- ☐ Combustible Gas Indicator

Special Instructions: Test / Fire Watch / Welding Gear

Completed by: Danner Scott Hopkins (Hop) — Name Printed

Danner Scott Hopkins — Signature

____ Date

____ Manager

ITC FORM 9571-1
7/103-5-85

ATTACHMENT 4

LOCKOUT/TAGOUT FOR ELECTRICAL EQUIPMENT

Job: SEAD LTTD 519200 2/20/95

Device: Screen + Hammer Mill Lock Out To Repair Knock Down Plate in Screen

Location: Primary Treatment Skid

Authorized Person: Apple

PREPARATION FOR SHUTDOWN

1. Determine power type and shutoff location
2. Determine if there is more than one energy source
3. Determine magnitude of power (voltage)
4. Notify affected employees in the area that equipment will be under lockout for maintenance.
5. Shutoff power sources to machine.

LOCKOUT/TAGOUT

6. Lock and tag main power switches in the OFF position, remove fuses.
7. Verify that no power is available to the equipment using a voltmeter, if necessary.
8. Drain devices such as capacitor banks.
9. Verify that these devices have no stored energy by use of the voltmeter.
10. Repair equipment.

RETURN TO SERVICE

11. Be sure all connections are made and any unused tools and equipment are removed.
12. Remove lock if necessary to verify machine is repaired. The maintenance employee, while verifying the machine is repaired cannot leave the immediate area.
13. Remove tag from machine.
14. Notify employees in the area that the equipment is available.

Authorized Person:

Site Supervisor: Damon Scott Hyde

IT Corporation is a wholly owned subsidiary of International Technology Corporation

ATTACHMENT 5

LOCKOUT/TAGOUT FOR COMPRESSED AIR AND GASES

Job: SEAD 2/20/95

Device: Gas line To Dryer

Location: Ash landfill LHD unit

Authorized Person: Wayne Rawlerson

PREPARATION FOR SHUTDOWN

1. Determine types and shutoff location
2. Determine if there is more than one energy source
3. Determine magnitude of compressed air, gas, steam, water, or fluids.
4. Notify affected employees in the area that equipment will be locked out for maintenance.
5. Shutoff main supply to machine.

LOCKOUT/TAGOUT

6. Lock and tag main supply in the OFF position.
7. Bleed line and verify that no air or gases remain in the equipment.
8. Repair equipment.

RETURN TO SERVICE

9. Be sure all connections are made and any unused tools and equipment are removed.
10. Remove lock if necessary to verify proper operation.
12. Remove tag.
13. Notify employees in the area that the equipment is available.

Authorized Person: W. Rawlerson

Site Supervisor:

IT Corporation is a wholly owned subsidiary of International Technology Corporation

ATTACHMENT 4

LOCKOUT/TAGOUT FOR ELECTRICAL EQUIPMENT

Job: SEAD 2/20/95

Device: Pugmill, Dryer, Slinger, Radial Stacker

Location: Ash landfill LTD Unit

Authorized Person: Wayne Rawlerson

PREPARATION FOR SHUTDOWN

1. Determine power type and shutoff location
2. Determine if there is more than one energy source
3. Determine magnitude of power (voltage)
4. Notify affected employees in the area that equipment will be under lockout for maintenance.
5. Shutoff power sources to machine.

LOCKOUT/TAGOUT

6. Lock and tag main power switches in the OFF position, remove fuses.
7. Verify that no power is available to the equipment using a voltmeter, if necessary.
8. Drain devices such as capacitor banks.
9. Verify that these devices have no stored energy by use of the voltmeter.
10. Repair equipment.

RETURN TO SERVICE

11. Be sure all connections are made and any unused tools and equipment are removed.
12. Remove lock if necessary to verify machine is repaired. The maintenance employee, while verifying the machine is repaired cannot leave the immediate area.
13. Remove tag from machine.
14. Notify employees in the area that the equipment is available.

Authorized Person: W. Rawlerson

Site Supervisor:

IT Corporation is a wholly owned subsidiary of International Technology Corporation

ATTACHMENT 4

LOCKOUT/TAGOUT FOR ELECTRICAL EQUIPMENT

Job: SEAD 2/20/95

Device: Dryer, slinger belt

Location: Ashland Fill LTD unit

Authorized Person: Wayne Rawlerson

PREPARATION FOR SHUTDOWN

1. Determine power type and shutoff location
2. Determine if there is more than one energy source
3. Determine magnitude of power (voltage)
4. Notify affected employees in the area that equipment will be under lockout for maintenance.
5. Shutoff power sources to machine.

LOCKOUT/TAGOUT

6. Lock and tag main power switches in the OFF position, remove fuses.
7. Verify that no power is available to the equipment using a voltmeter, if necessary.
8. Drain devices such as capacitor banks.
9. Verify that these devices have no stored energy by use of the voltmeter.
10. Repair equipment.

RETURN TO SERVICE

11. Be sure all connections are made and any unused tools and equipment are removed.
12. Remove lock if necessary to verify machine is repaired. The maintenance employee, while verifying the machine is repaired cannot leave the immediate area.
13. Remove tag from machine.
14. Notify employees in the area that the equipment is available.

Authorized Person:

Site Supervisor:

IT Corporation is a wholly owned subsidiary of International Technology Corporation

ATTACHMENT 5

LOCKOUT/TAGOUT FOR COMPRESSED AIR AND GASES

Job: SEAD 2/20/95

Device: Gas lines to Dryer

Location: ash landfill LHD unit

Authorized Person: Wayne Rawlerson

PREPARATION FOR SHUTDOWN

1. Determine types and shutoff location
2. Determine if there is more than one energy source
3. Determine magnitude of compressed air, gas, steam, water, or fluids.
4. Notify affected employees in the area that equipment will be locked out for maintenance.
5. Shutoff main supply to machine.

LOCKOUT/TAGOUT

6. Lock and tag main supply in the OFF position.
7. Bleed line and verify that no air or gases remain in the equipment.
8. Repair equipment.

RETURN TO SERVICE

9. Be sure all connections are made and any unused tools and equipment are removed.
10. Remove lock if necessary to verify proper operation.
12. Remove tag.
13. Notify employees in the area that the equipment is available.

Authorized Person:

Site Supervisor:

IT Corporation is a wholly owned subsidiary of International Technology Corporation

INTERNATIONAL TECHNOLOGY CORPORATION

Page ___ of ___

Procedure No. HS300
Revision No. 0
Date 03/01/93
Page 21a of 21

ENTRY PERMIT
PERMIT-REQUIRED CONFINED SPACE (PRCS)

ATTACHMENT 3

Division/Location CTR Seneca
Job No. 519200
Customer USACE
Address Romulus NY
Location of Job ash landfill
Identity of PRCS
Describe Hazards of PRCS (Chemical, Physical) PAH'S, DCE
Chemical Introduced into Space PAH.S DCE
Purpose This Permit Authorized go in Dryer & clean out flights

CHECKLIST	YES	DOES NOT APPLY
All lines leading to and from confined space have been blinded or disconnected	T.M	
Electrical service disconnected or locked out	T.M	
All grounding and bonding cables in place	T.M	
All lighting, fittings, power equipment, and extension cords are explosion-proof		T.M
Ground Fault Circuit Indicator (GFCI) checked and functioning	T.M	
All ignition sources have been isolate	T.M	
All respiratory equipment and alarms checked and functional	T.M	
All safety harnesses and life lines checked	T.M	
All required PPE checked and in use	T.M	
All entrants are confined space trained	T.M	
All entrants are trained in the use, care, and limitations of respirators and PPE	T.M	
Attendant trained in emergency procedures	T.M	
Attendant(s) trained in rescue procedures	T.M	
Outside rescue service was contacted and they have been notified of this entry	T.M	
Appropriate rescue equipment available and checked	T.M	
Ventilation system in use and effective	T.M	
Entrant(s) can achieve a gas-tight seal with respirator	T.M	
Entrant(s) are not wearing contact lenses	T.M	
All tests have been completed and indicate that entrance requirements have been met	T.M	
Appropriate warning signs have been posted and unauthorized personnel have been excluded from the PRCS and area	T.M	

PERSONAL PROTECTIVE EQUIPMENT (Circle)

EYE/FACE
Chemical Goggles
Face Shield
Safety Glasses

EXTREMITIES
Hard Hat
Gloves (Material Nitro)
Hoods
Boots (Material Neoprene)
Booties

BODY
Suit (Level C, Material Poly)

RESPIRATORY
SCBA
Air Line
Egress System
Air Purifying (Cartridge _____)
Powered Air Purifying (Cartridge _____)

OTHER
Hearing Protection
Harness & Lifeline
Chest or Parachute

RESCUE EQUIPMENT
Mechanical Extraction Device
First Aid Kit
SCBA
Other (Specify) _____

NON-IT RESCUE TEAM
Instructions to Summon Rescue
Dial 911

COMMUNICATION
Lifeline "Tug" Signals (See HASP)
Air Powered Horn Signals (See HASP)
Other _____

IF THE ANSWER TO ANY OF THE ABOVE QUESTIONS IS NO, ENTRY IS NOT PERMITTED.

OTHER PERMITS ISSUED FOR WORK IN PRCS: _____

OTHER HAZARD CONTROL PROCEDURES OR INSTRUCTIONS: _____

2-21

INTERNATIONAL TECHNOLOGY CORPORATION

TEST DATA
Oxygen, Flammability and Toxic Contaminant(s)

Page __ of __ Procedure No. HS300
Revision No. 0
Date 03/01/93
Page 21b of 21

Time	Percent Oxygen	Percent LEL	PEG	PEG	PEG	PEG	PEG	Initials	Comments
11:05	21.3	0							

AUTHORIZED ENTRANTS
Art Cruchfield
Bill Williams
Woody Farmer
Emylie Stam
Robert Rushing

AUTHORIZED ATTENDANTS
Wayne Raulerson
Art Cruchfield

RESCUE PERSONNEL

Diagram the confined space, indicate location of manways and ventilators. Indicate location(s) where tests conducted.

) (- Manway
∞ - Ventilator
X - Test Location

ACCEPTABLE ENTRY CONDITIONS

1) Enry Permit Completely Filled Out
2) Oxygen between 20-23.5%
3) Combustilbe Gases Below 10% LEL
4) Permissible Levels of Toxic Gases (List)
5) Other

PRCS SAFE FOR ENTRY
DATE/TIME 2 20 NAME ENTRY SUPERVISOR Art Cruchfield ~~Wayne Raulerson~~ SIGNATURE [signature]
CURRENT ENTRY SUPERVISOR (IF DIFFERENT)
ENTRY PERMIT EXPIRES DATE/TIME 2-20 / 530 PM (No longer than 1 shift)

ENTRY PERMIT CANCELLED
DATE/TIME 2-20 / 1145 SIGNATURE [signature]
REASON (✓) ✓ Work Complete ✗ Authorized Conditions not met ____ Incident

DESCRIBE PROBLEMS DURING ENTRY AND RESOLUTION

RECLASSIFICATION TO NON-PERMIT-REQUIRED CONFINED SPACE
Describe hazard removal methods, without use of ventilation.

TESTING VERIFICATION SHOWN AT TIME ____ ON TEST DATA CHART ABOVE.
DATE/TIME ____/____ ENTRY SUPERVISOR SIGNATURE

REVIEWED BY [signature] DATE 2/20/95

2-32

IT Corporation is a wholly owned subsidiary of International Technology Corporation

954-5-92

ATTACHMENT 4

LOCKOUT/TAGOUT FOR ELECTRICAL EQUIPMENT

Job: 519200 / Feb 21 / 94

Device: Pugmill

Location: LTD Unit

Authorized Person: Vince

PREPARATION FOR SHUTDOWN

1. Determine power type and shutoff location
2. Determine if there is more than one energy source
3. Determine magnitude of power (voltage)
4. Notify affected employees in the area that equipment will be under lockout for maintenance.
5. Shutoff power sources to machine.

LOCKOUT/TAGOUT

6. Lock and tag main power switches in the OFF position, remove fuses.
7. Verify that no power is available to the equipment using a voltmeter, if necessary.
8. Drain devices such as capacitor banks.
9. Verify that these devices have no stored energy by use of the voltmeter.
10. Repair equipment.

RETURN TO SERVICE

11. Be sure all connections are made and any unused tools and equipment are removed.
12. Remove lock if necessary to verify machine is repaired. The maintenance employee, while verifying the machine is repaired cannot leave the immediate area.
13. Remove tag from machine.
14. Notify employees in the area that the equipment is available.

Authorized Person:

Site Supervisor: Danny Scott Hyde

2-78

Operating Area Screen Deck Good for this date only Feb 22 19 94

Specific vessel or equipment LTA

Work to be done Weld overlaping screen to screen

TESTS

STATE EXACT LOCATION OF TEST	TIME	PERCENT LOWER EXPLOSION LIMIT	PERCENT OXYGEN	OTHERS		INITIAL
Screen and surrounding Area	2200	0	21	/	/	TJC

CHECK LIST

	Initial Yes	Initial Does Not Apply
Operations/plant personnel have been informed of work to be performed	TJC	
All tanks/lines/valves are disconnected, blinded, or locked out.		TJC
Equipment and all attached piping has been cleaned and purged with: ck blank) Water____ Steam____ Inert gas____ Air		TJC
Electrical service has been locked out and tagged.	TJC	
All grounding/bonding wire in place.	TJC	
Surrounding equipment and operations are safe for hot work.	TJC	
No open vessels or lines within 35 feet of hot work area.	TJC	
No combustible items within 35 feet of hot work area or covered with wetted tarpaulins.	TJC	
Fire Watch has been provided by Contractor.	TJC	
No flammable gases greater than 10% LEL in hot work area.	TJC	
All requirements of ITCPRO 9531 for Confined Space Entry have been met and ITC Form 9531-1 has been completed and posted. If vessel contains leaded product, all requirements of ITCPRO 9531.3 have been met.	TJC	

PERSONNEL PROTECTIVE EQUIPMENT

EYES
- ☐ Chemical Goggles
- ☐ Face Shield
- ☐ Safety Glasses
- ☒ Welders Mask

BODY
- ☐ Environmental Suit: ☐ PVC ☐ Bur
- ☐ Heavy Suit: ☐ PVC ☐ Neoprene
- ☐ Light PVC Suit
- ☒ Yellow Tyvek Suit
- ☐ White Tyvek Suit

EXTREMITIES
- ☐ Hard Hat
- ☐ Gloves
- ☐ Boots ☐ PVC ☐ Neoprene
- ☐ Hoods ☐ PVC ☐ Neoprene
- ☒ Foot Coverings, Disposable

RESPIRATORY
- ☐ Self-Contained Respirator
- ☐ Hose Line Respirator
- ☐ Hose Line W/Egress
- ☒ Cartridge Respirator

Cartridge Type Organic
- ☐ Dust Respirator

EQUIPMENT REQUIRED
- ☒ Fire Extinguisher
- ☐ Fire Blanket
- ☐ Charged Water Hose
- ☐ Combustible Gas Indicator

Special Instructions: good Communication between welder and Operator

Prepared by: Timothy T Cole (Name Printed) Timothy T Cole (Signature) Date

Danny Scott Hyde (Manager)

ITC FORM 9571-1
7/03-5-85

ATTACHMENT 4

LOCKOUT/TAGOUT FOR ELECTRICAL EQUIPMENT

Job: Seneca Army Depot 2/22/95

Device: Screen

Location: LTA

Authorized Person: Vince

PREPARATION FOR SHUTDOWN

1. Determine power type and shutoff location
2. Determine if there is more than one energy source
3. Determine magnitude of power (voltage)
4. Notify affected employees in the area that equipment will be under lockout for maintenance.
5. Shutoff power sources to machine.

LOCKOUT/TAGOUT

6. Lock and tag main power switches in the OFF position, remove fuses.
7. Verify that no power is available to the equipment using a voltmeter, if necessary.
8. Drain devices such as capacitor banks.
9. Verify that these devices have no stored energy by use of the voltmeter.
10. Repair equipment.

RETURN TO SERVICE

11. Be sure all connections are made and any unused tools and equipment are removed.
12. Remove lock if necessary to verify machine is repaired. The maintenance employee, while verifying the machine is repaired cannot leave the immediate area.
13. Remove tag from machine.
14. Notify employees in the area that the equipment is available.

Authorized Person: Timothy Thurn
Dennis Scott Hyst

Site Supervisor:

2-78

Hot work.

Operating Area Ash Landfill Good for this date only 2/23 19 95

Specific vessel or equipment Drier

Work to be done Inspection and adjust Scraper.

TESTS

STATE EXACT LOCATION OF TEST	TIME	PERCENT LOWER EXPLOSION LIMIT	PERCENT OXYGEN	OTHERS		INITIA
~~Drier~~ Screen.	10:00	0	21.0			

CHECK LIST

	Initial: Yes	Initial: Does Not Apply
Operations/plant personnel have been informed of work to be performed.	/	
All tanks/lines/valves are disconnected, blinded, or locked out.	/	
Equipment and all attached piping has been cleaned and purged with: (check blank) Water___ Steam___ Inert gas___ Air		/
Electrical service has been locked out and tagged.	/	
All grounding/bonding wire in place.	/	
Surrounding equipment and operations are safe for hot work.	/	
No open vessels or lines within 35 feet of hot work area.	/	
No combustible items within 35 feet of hot work area or covered with wetted tarpaulins.	/	
Fire Watch has been provided by Contractor.	/	
No flammable gases greater than 10% LEL in hot work area.	/	
All requirements of ITCPRO 9531 for Confined Space Entry have been met and ITC Form 9531-1 has been completed and posted.		
If vessel contains leaded product, all requirements of ITCPRO 9531.3 have been met.		/

PERSONNEL PROTECTIVE EQUIPMENT

EYES
- ☐ Chemical Goggles
- ☐ Face Shield
- ☐ Safety Glasses
- ☐ Welders Mask

BODY
- ☐ Environmental Suit: ☐ PVC ☐ Sur
- ☐ Heavy Suit: ☐ PVC ☐ Neoprene
- ☐ Light PVC Suit
- ☑ Yellow Tyvek Suit
- ☐ White Tyvek Suit

EXTREMITIES
- ☑ Hard Hat
- ☑ Gloves
- ☑ Boots ☐ PVC ☑ Neoprene
- ☐ Hoods ☐ PVC ☐ Neoprene
- ☐ Foot Coverings, Disposable

RESPIRATORY
- ☐ Self-Contained Respirator
- ☐ Hose Line Respirator
- ☐ Hose Line W/Egress
- ☑ Cartridge Respirator

Cartridge Type GMCH

- ☐ Dust Respirator

EQUIPMENT REQUIRED
- ☑ Fire Extinguisher
- ☐ Fire Blanket
- ☐ Charged Water Hose
- ☑ Combustible Gas Indicator

Special Instructions: Emergency Number #117

Completed by: Wayne Rawlerson (Name Printed) Wayne Rawlerson (Signature) 2/23/95 (Date)

Manager

ITC FORM 9571-1
7/103-5-85

Operating Area LTA Good for this date only Feb 23 19 85

Specific vessel or equipment Drier

Work to be done Cut Flight-

TESTS

STATE EXACT LOCATION OF TEST	TIME	PERCENT LOWER EXPLOSION LIMIT	PERCENT OXYGEN	OTHERS		INIT.
Drier & Surrounding Area	2015	0	21			TJC

CHECK LIST

	Initial Yes	Initial Does Not Apply
Operations/plant personnel have been informed of work to be performed	TJC	
All tanks/lines/valves are disconnected, blinded, or locked out.	TJC	
Equipment and all attached piping has been cleaned and purged with: (check blank) Water____ Steam____ Inert gas____ Air X	TJC	
Electrical service has been locked out and tagged.	TJC	
All grounding/bonding wire in place.	TJC	
Surrounding equipment and operations are safe for hot work.	TJC	
No open vessels or lines within 35 feet of hot work area.	TJC	
No combustible items within 35 feet of hot work area or covered with wetted tarpaulins.	TJC	
Fire Watch has been provided by Contractor.	TJC	
No flammable gases greater than 10% LEL in hot work area.	TJC	
All requirements of ITCPRO 9531 for Confined Space Entry have been met and ITC Form 9531-1 has been completed and posted.	TJC	NA
If vessel contains leaded product, all requirements of ITCPRO 9531.3 have been met.		

PERSONNEL PROTECTIVE EQUIPMENT

EYES
- ☐ Chemical Goggles
- ☒ Face Shield
- ☐ Safety Glasses
- ☐ Welders Mask

BODY
- ☐ Environmental Suit: ☐ PVC ☐ B.
- ☐ Heavy Suit: ☐ PVC ☐ Neoprene
- ☐ Light PVC Suit
- ☒ Yellow Tyvek Suit
- ☐ White Tyvek Suit

EXTREMITIES
- ☒ Hard Hat
- ☒ Gloves
- ☒ Boots ☐ PVC ☐ Neoprene
- ☒ Hoods ☐ PVC ☐ Neoprene
- ☒ Foot Coverings, Disposable

RESPIRATORY
- ☐ Self-Contained Respirator
- ☐ Hose Line Respirator
- ☐ Hose Line W/Egress
- ☐ Cartridge Respirator
- Cartridge Type GMOH
- ☐ Dust Respirator

EQUIPMENT REQUIRED
- ☒ Fire Extinguisher
- ☐ Fire Blanket
- ☐ Charged Water Hose
- ☒ Combustible Gas Indicator

pecial Instructions:

ompleted by: Timothy T Cole (Name Printed) Timothy T Cole (Signature) Feb 23, 9 (Date)

Manager

C FORM 9571-1
/103-5-85

ATTACHMENT 4

LOCKOUT/TAGOUT FOR ELECTRICAL EQUIPMENT

Job: USACE 2/23/95

Device: Daier T Slinger Belt

Location: LTD

Authorized Person: Terry OBrien

PREPARATION FOR SHUTDOWN

1. Determine power type and shutoff location
2. Determine if there is more than one energy source
3. Determine magnitude of power (voltage)
4. Notify affected employees in the area that equipment will be under lockout for maintenance.
5. Shutoff power sources to machine.

LOCKOUT/TAGOUT

6. Lock and tag main power switches in the OFF position, remove fuses.
7. Verify that no power is available to the equipment using a voltmeter, if necessary.
8. Drain devices such as capacitor banks.
9. Verify that these devices have no stored energy by use of the voltmeter.
10. Repair equipment.

RETURN TO SERVICE

11. Be sure all connections are made and any unused tools and equipment are removed.
12. Remove lock if necessary to verify machine is repaired. The maintenance employee, while verifying the machine is repaired cannot leave the immediate area.
13. Remove tag from machine.
14. Notify employees in the area that the equipment is available.

Authorized Person:

Site Supervisor:

2-78

ATTACHMENT 5

LOCKOUT/TAGOUT FOR COMPRESSED AIR AND GASES

Job: Ash Landfill 2/23/95

Device: Gas Line

Location: Drier Burner

Authorized Person: Wayne Paulsen

PREPARATION FOR SHUTDOWN

1. Determine types and shutoff location
2. Determine if there is more than one energy source
3. Determine magnitude of compressed air, gas, steam, water, or fluids.
4. Notify affected employees in the area that equipment will be locked out for maintenance.
5. Shutoff main supply to machine.

LOCKOUT/TAGOUT

6. Lock and tag main supply in the OFF position.
7. Bleed line and verify that no air or gases remain in the equipment.
8. Repair equipment.

RETURN TO SERVICE

9. Be sure all connections are made and any unused tools and equipment are removed.
10. Remove lock if necessary to verify proper operation.
12. Remove tag.
13. Notify employees in the area that the equipment is available.

Authorized Person:

Site Supervisor:

IT Corporation is a wholly owned subsidiary of International Technology Corporation

ATTACHMENT 4

LOCKOUT/TAGOUT FOR ELECTRICAL EQUIPMENT

Job: Ash Landfill SEDA. 2/23/95

Device: Drier, Screen, Slinger

Location: Ash Landfill

Authorized Person: Wayne Paulson

PREPARATION FOR SHUTDOWN

1. Determine power type and shutoff location
2. Determine if there is more than one energy source
3. Determine magnitude of power (voltage)
4. Notify affected employees in the area that equipment will be under lockout for maintenance.
5. Shutoff power sources to machine.

LOCKOUT/TAGOUT

6. Lock and tag main power switches in the OFF position, remove fuses.
7. Verify that no power is available to the equipment using a voltmeter, if necessary.
8. Drain devices such as capacitor banks.
9. Verify that these devices have no stored energy by use of the voltmeter.
10. Repair equipment.

RETURN TO SERVICE

11. Be sure all connections are made and any unused tools and equipment are removed.
12. Remove lock if necessary to verify machine is repaired. The maintenance employee, while verifying the machine is repaired cannot leave the immediate area.
13. Remove tag from machine.
14. Notify employees in the area that the equipment is available.

Authorized Person:

Site Supervisor:

IT Corporation is a wholly owned subsidiary of International Technology Corporation

INTERNATIONAL TECHNOLOGY CORPORATION

ENTRY PERMIT
PERMIT-REQUIRED CONFINED SPACE (PRCS)

Page __ of __

Procedure No. HS300
Revision No. 0
Date 03/01/93
Page 21a of 21

ATTACHMENT 3

Division/Location _____ Job No. _____
Customer USACE Address _____
Location of Job Ash Landfill Identity of PRCS _____
Describe Hazards of PRCS (Chemical, Physical) _____

Chemical Introduced Into Space N/A

Purpose This Permit Authorized Inspection of Drill

CHECKLIST	YES	DOES NOT APPLY
All lines leading to and from confined space have been blinded or disconnected	JJC	
Electrical service disconnected or locked out	JJC	
All grounding and bonding cables in place	JJC	
All lighting, fittings, power equipment, and extension cords are explosion-proof		JJC
Ground Fault Circuit Indicator (GFCI) checked and functioning		JJC
All ignition sources have been isolate	JJC	
All respiratory equipment and alarms checked and functional	JJC	
All safety harnesses and life lines checked		JJC
All required PPE checked and in use	JJC	
All entrants are confined space trained	JJC	
All entrants are trained in the use, care, and limitations of respirators and PPE	JJC	
Attendant trained in emergency procedures	JJC	
Attendant(s) trained in rescue procedures	JJC	
Outside rescue service will be used and they have been notified of this entry	JJC	
Appropriate rescue equipment available and checked	JJC	
Ventilation system in use and effective	JJC	
Entrant(s) can achieve a gas-tight seal with respirator	JJC	
Entrant(s) are not wearing contact lenses	JJC	
All tests have been completed and indicate that entrance requirements have been met	JJC	
Appropriate warning signs have been posted and unauthorized personnel have been excluded from the PRCS and area		

IF THE ANSWER TO ANY OF THE ABOVE QUESTIONS IS NO, ENTRY IS NOT PERMITTED.

PERSONAL PROTECTIVE EQUIPMENT (Circle)

EYE/FACE
Chemical Goggles
Face Shield
Safety Glasses

EXTREMITIES
Hard Hat
Gloves (Material Nitrile)
Hoods
Boots (Material Rubber)
Booties

BODY
Suit (Level C, Material PY Tyvek)

RESPIRATORY
SCBA
Air Line
Egress System
Air Purifying (Cartridge GMCH)
Powered Air Purifying (Cartridge _____)

OTHER
Hearing Protection
Harness & Lifeline
Chest or Parachute

RESCUE EQUIPMENT
Mechanical Extraction Device
First Aid Kit
SCBA
Other (Specify) Visqueen

NON-IT RESCUE TEAM
Instructions to Summon Rescue
Base Fire Dept

COMMUNICATION
Lifeline "Tug" Signals (See HASP)
Air Powered Horn Signals (See HASP)
Other Radio

OTHER PERMITS ISSUED FOR WORK IN PRCS: _____

OTHER HAZARD CONTROL PROCEDURES OR INSTRUCTIONS: _____

2-21

INTERNATIONAL TECHNOLOGY CORPORATION

TEST DATA
Oxygen, Flammability and Toxic Contaminant(s)

Page __ of __ Procedure No. HS300
Revision No. 0
Date 03/01/93
Page 21b of 21

Time	Percent Oxygen	Percent LEL	PEG	PEG	PEG	PEG	PEG	Initials	Comments
2000	21.0	0							TE

AUTHORIZED ENTRANTS

Ters O'Brian

AUTHORIZED ATTENDANTS

RESCUE PERSONNEL

Diagram the confined space, indicate location of manways and ventilators. Indicate location(s) where tests conducted.

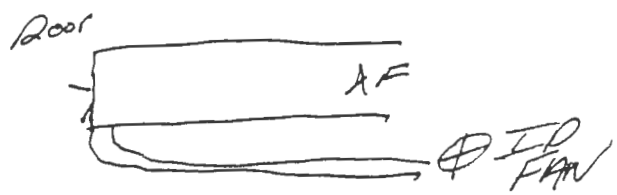

) (- Manway
= - Ventilator
X - Test Location

ACCEPTABLE ENTRY CONDITIONS

1) Enry Permit Completely Filled Out
2) Oxygen between 20-23.5%
3) Combustible Gases Below 10% LEL
4) Permissible Levels of Toxic Gases (List)

5) Other

PRCS SAFE FOR ENTRY

DATE/TIME 2/23/95 NAME ENTRY SUPERVISOR Vince Vortess SIGNATURE X Vince Vortess

CURRENT ENTRY SUPERVISOR (IF DIFFERENT)

ENTRY PERMIT EXPIRES DATE/TIME 2/23/95 (No longer than 1 shift)

ENTRY PERMIT CANCELLED

DATE/TIME ___/___ SIGNATURE

REASON (✓) ___ Work Complete ___ Authorized Conditions not met ___ Incident

DESCRIBE PROBLEMS DURING ENTRY AND RESOLUTION N/A

RECLASSIFICATION TO NON-PERMIT-REQUIRED CONFINED SPACE
Describe hazard removal methods, without use of ventilation.

TESTING VERIFICATION SHOWN AT TIME ___ ON TEST DATA CHART ABOVE.

DATE/TIME ___/___ ENTRY SUPERVISOR SIGNATURE

REVIEWED BY Dick A. Cl DATE 2/23/95

2-3

INTERNATIONAL TECHNOLOGY CORPORATION

ENTRY PERMIT
PERMIT-REQUIRED CONFINED SPACE (PRCS)

Page __ of __

Procedure No. HS300
Revision No. 0
Date 03/01/93
Page 21a of 21

ATTACHMENT 3

Division/Location _____ Job No. _____
Customer USACE Address _____
Location of Job Ash Landfill Identity of PRCS _____
Describe Hazards of PRCS (Chemical, Physical) _____

Chemical Introduced Into Space N/A

Purpose This Permit Authorized Inspection of Drier.

CHECKLIST	YES	DOES NOT APPLY
All lines leading to and from confined space have been blinded or disconnected	✓	
Electrical service disconnected or locked out	✓	
All grounding and bonding cables in place	✓	
All lighting, fittings, power equipment, and extension cords are explosion-proof		✓
Ground Fault Circuit Indicator (GFCI) checked and functioning	—	✓
All ignition sources have been isolate	✓	
All respiratory equipment and alarms checked and functional	✓	
All safety harnesses and life lines checked		✓
All required PPE checked and in use	✓	
All entrants are confined space trained	✓	
All entrants are trained in the use, care, and limitations of respirators and PPE	✓	
Attendant trained in emergency procedures	✓	
Attendant(s) trained in rescue procedures	✓	
Outside rescue service will be used and they have been notified of this entry	✓	
Appropriate rescue equipment available and checked	✓	
Ventilation system in use and effective	✓	
Entrant(s) can achieve a gas-tight seal with respirator	✓	
Entrant(s) are not wearing contact lenses	✓	
All tests have been completed and indicate that entrance requirements have been met	✓	
Appropriate warning signs have been posted and unauthorized personnel have been excluded from the PRCS and area		

PERSONAL PROTECTIVE EQUIPMENT (Circle)

EYE/FACE
Chemical Goggles
Face Shield
Safety Glasses

EXTREMITIES
Hard Hat
Gloves (Material Nitrile)
Hoods
Boots (Material Neop)
Gaiters

BODY
Suit (Level C, Material Poly Tyvek)

RESPIRATORY
SCBA
Air Line
Egress System
Air Purifying (Cartridge GMCH)
Powered Air Purifying (Cartridge _____)

OTHER
Hearing Protection
Harness & Lifeline
Chest or Parachute

RESCUE EQUIPMENT
Mechanical Extraction Device
First Aid Kit
SCBA
Other (Specify) Visual/Comm

NON-IT RESCUE TEAM
Instructions to Summon Rescue
Base Fire Dept.

COMMUNICATION
Lifeline "Tug" Signals (See HASP)
Air Powered Horn Signals (See HASP)
Other Radio.

IF THE ANSWER TO ANY OF THE ABOVE QUESTIONS IS NO, ENTRY IS NOT PERMITTED.

OTHER PERMITS ISSUED FOR WORK IN PRCS: _____

OTHER HAZARD CONTROL PROCEDURES OR INSTRUCTIONS: _____

2-21

INTERNATIONAL TECHNOLOGY CORPORATION

TEST DATA
Oxygen, Flammability and Toxic Contaminants

Page __ of __ Procedure No. HS300
Revision No. 0
Date 03/01/93
Page 21b of 21

Time	Percent Oxygen	Percent LEL	PEG	PEG	PEG	PEG	PEG	Invoice	Comments
1100	21.0	0							Cal.

AUTHORIZED ENTRANTS
Bill Williams

AUTHORIZED ATTENDANTS
Art Crutchfield

RESCUE PERSONNEL
Base
Fire Department

Diagram the confined space. Indicate location of manways and ventilators. Indicate location(s) where tests conducted.

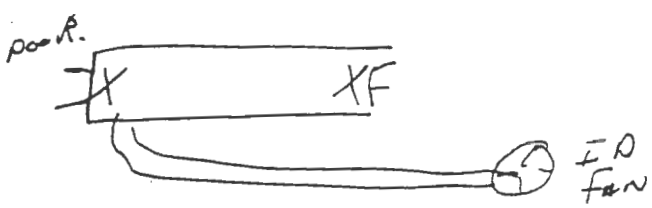

)(- Manway
= - Ventilator
X - Test Location

ACCEPTABLE ENTRY CONDITIONS

1) Entry Permit Completely Filled Out
2) Oxygen between 20-23.5%
3) Combustible Gases Below 10% LEL
4) Permissible Levels of Toxic Gases (List)
5) Other

PRCS SAFE FOR ENTRY

DATE/TIME 2/23/95 NAME ENTRY SUPERVISOR Art Crutchfield SIGNATURE

CURRENT ENTRY SUPERVISOR (IF DIFFERENT) Art Crutchfield

ENTRY PERMIT EXPIRES DATE/TIME 2/23/95 (No longer than 1 shift)

ENTRY PERMIT CANCELLED

DATE/TIME ___/___ SIGNATURE

REASON (✓) ___ Work Complete ___ Authorized Conditions not met ___ Incident

DESCRIBE PROBLEMS DURING ENTRY AND RESOLUTION

N/A

RECLASSIFICATION TO NON-PERMIT-REQUIRED CONFINED SPACE
Describe hazard removal methods, without use of ventilation.

TESTING VERIFICATION SHOWN AT TIME ___ ON TEST DATA CHART ABOVE.

DATE/TIME ___/___ ENTRY SUPERVISOR SIGNATURE

REVIEWED BY [signature] DATE 2/23/95

2-32

Operating Area: Screen Deck. Good for this date only 2/25/ 1995

Specific vessel or equipment: Screen

Work to be done: Welding

TESTS

STATE EXACT LOCATION OF TEST	TIME	PERCENT LOWER EXPLOSION LIMIT	PERCENT OXYGEN	OTHERS		INITIA
Screen Deck.	8:00	Ø	21.0			WR

CHECK LIST

	Initial: Yes	Initial: Does Not Apply
Operations/plant personnel have been informed of work to be performed	✓	
All tanks/lines/valves are disconnected, blinded, or locked out.		✓
Equipment and all attached piping has been cleaned and purged with: (check blank) Water___ Steam___ Inert gas___ Air___		✓
Electrical service has been locked out and tagged.	✓	
All grounding/bonding wire in place.	✓	
Surrounding equipment and operations are safe for hot work.	✓	
No open vessels or lines within 35 feet of hot work area.	✓	
No combustible items within 35 feet of hot work area or covered with wetted tarpaulins.	✓	
Fire Watch has been provided by Contractor.	✓	
No flammable gases greater than 10% LEL in hot work area.	✓	
All requirements of ITCPRO 9531 for Confined Space Entry have been met and ITC Form 9531-1 has been completed and posted.		✓
If vessel contains leaded product, all requirements of ITCPRO 9531.3 have been met.		✓

PERSONNEL PROTECTIVE EQUIPMENT

EYES
- ☐ Chemical Goggles
- ☐ Face Shield
- ☐ Safety Glasses
- ☑ Welders Mask

BODY
- ☐ Environmental Suit: ☑ PVC ☐ Buna
- ☐ Heavy Suit: ☐ PVC ☐ Neoprene
- ☐ Light PVC Suit
- ☑ Yellow Tyvek Suit
- ☐ White Tyvek Suit

EXTREMITIES
- ☐ Hard Hat
- ☑ Gloves
- ☑ Boots ☐ PVC ☐ Neoprene
- ☑ Hoods ☐ PVC ☐ Neoprene
- ☐ Foot Coverings, Disposable

RESPIRATORY
- ☐ Self-Contained Respirator
- ☐ Hose Line Respirator
- ☐ Hose Line W/Egress
- ☑ Cartridge Respirator

Cartridge Type _____
- ☐ Dust Respirator

EQUIPMENT REQUIRED
- ☑ Fire Extinguisher
- ☐ Fire Blanket
- ☐ Charged Water Hose
- ☐ Combustible Gas Indicator

Special Instructions:

Completed by: Wayne Rauterson (Name Printed) Wayne Rauterson (Signature) 2/25/95 (Date)

Manager

ITC FORM 9571-1
7103-5-85

ATTACHMENT 5

LOCKOUT/TAGOUT FOR COMPRESSED AIR AND GASES

Job: SEAD - 519200

Device: LTA

Location: LP Lines - Primary & Secondary

Authorized Person: Timothy T [illegible]

PREPARATION FOR SHUTDOWN

1. Determine types and shutoff location
2. Determine if there is more than one energy source
3. Determine magnitude of compressed air, gas, steam, water, or fluids.
4. Notify affected employees in the area that equipment will be locked out for maintenance.
5. Shutoff main supply to machine.

LOCKOUT/TAGOUT

6. Lock and tag main supply in the OFF position.
7. Bleed line and verify that no air or gases remain in the equipment.
8. Repair equipment.

RETURN TO SERVICE

9. Be sure all connections are made and any unused tools and equipment are removed.
10. Remove lock if necessary to verify proper operation.
12. Remove tag.
13. Notify employees in the area that the equipment is available.

Authorized Person: Timothy T [illegible]

Site Supervisor:

IT Corporation is a wholly owned subsidiary of International Technology Corporation

ATTACHMENT 3

2-24-95

LOCKOUT LOG

AUTHORIZED EMPLOYEE	DATE	EQUIPMENT NAME	EQUIPMENT NUMBER	REASON FOR LOCKOUT
Vince Vorheies	2/24/95	Drier	MT-64	Entry
Vince Vorheies	2/24/95	Slinger	MT-64	Entry
Vince Vorheies	2/24/95	Drier	MT-64	Inspect
Vince Vorheies	2/24/95	Slinger	MT 64	Inspect
Vince Vorheies	2/24/95	Pugmill	MT 64	Inspect

IT Corporation is a wholly owned subsidiary of International Technology Corporation

INTERNATIONAL TECHNOLOGY CORPORATION

Page __ of __

Procedure No. HS300
Revision No. 0
Date 03/01/93
Page 21a of 21

ATTACHMENT 3

ENTRY PERMIT
PERMIT-REQUIRED CONFINED SPACE (PRCS)

Division/Location Thermal Job No. 51,9200
Customer Army Core Address Seneca Army Depot
Location of Job Arier- Identity of PRCS
Describe Hazards of PRCS (Chemical, Physical) N/A
Chemical Introduced Into Space N/A
Purpose This Permit Authorized Clean Build-up

CHECKLIST	YES	DOES NOT APPLY
All lines leading to and from confined space have been blinded or disconnected	TJC	
Electrical service disconnected or locked out	TJC	
All grounding and bonding cables in place	TJC	
All lighting, fittings, power equipment, and extension cords are explosion-proof	TJC	
Ground Fault Circuit Indicator (GFCI) checked and functioning	TJC	
All iginition sources have been isolate	TJC	
All respiratory equipment and alarms checked and functional	TJC	
All safety harnesses and life lines checked	TJC	
All required PPE checked and in use	TJC	
All entrants are confined space trained	TJC	
All entrants are trained in the use, care, and limitations of respirators and PPE	TJC	
Attendant trained in emergency procedures	TJC	
Attendant(s) trained in rescue procedures	TJC	
Outside rescue service will be used and they have been notified of this entry	TJC	
Appropriate rescue equipment available and checked	TJC	
Ventilation system in use and effective	TJC	
Entrant(s) can achieve a gas-tight seal with respirator	TJC	
Entrant(s) are not wearing contact lenses	TJC	
All tests have been completed and indicate that entrance requirements have been met	TJC	
Appropriate warning signs have been posted and unauthorized personnel have been excluded from the PRCS and area	TJC	

PERSONAL PROTECTIVE EQUIPMENT (Circle)

EYE/FACE
Chemical Goggles
Face Shield
Safety Glasses

EXTREMITIES
Hard Hat
Gloves (Material Poly)
Hoods
Boots (Material Phy Urethelen)
Booties

BODY
Suit (Level ____, Material ____)

RESPIRATORY
SCBA
Air Line
Egress System
Air Purifying (Cartridge ORGANIC)
Powered Air Purifying (Cartridge ____)

OTHER
Hearing Protection
Harness & Lifeline
Chest or Parachute

RESCUE EQUIPMENT
Mechanical Extraction Device
First Aid Kit
SCBA
Other (Specify) ____

NON-IT RESCUE TEAM
Instructions to Summon Rescue

COMMUNICATION
Lifeline "Tug" Signals (See HASP)
Air Powered Horn Signals (See HASP)
Other Radio-Visual

THE ANSWER TO ANY OF THE ABOVE QUESTIONS IS NO, ENTRY IS NOT PERMITTED.

OTHER PERMITS ISSUED FOR WORK IN PRCS:

OTHER HAZARD CONTROL PROCEDURES OR INSTRUCTIONS: Radio Contact

2-21

INTERNATIONAL TECHNOLOGY CORPORATION

TEST DATA
Oxygen, Flammability and Toxic Contaminant(s)

Page __ of __ Procedure No. HS300
Revision No. 0
Date 03/01/93
Page 21b of 21

Time	Percent Oxygen	Percent LEL	PEG	PEG	PEG	PEG	PEG	Initials	Comments
2200	21	0	TK						

AUTHORIZED ENTRANTS
Tony O'Brian

AUTHORIZED ATTENDANTS
Applebee
Vince Voorheis.

RESCUE PERSONNEL
Applebee
Vince Voorheis
Base Fire Dept

Diagram the confined space, indicate location of manways and ventilators. Indicate location(s) where tests conducted.

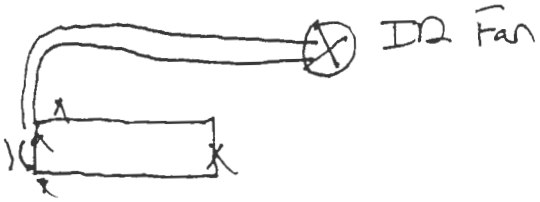

)(- Manway
= - Ventilator
X - Test Location

ACCEPTABLE ENTRY CONDITIONS

1) Entry Permit Completely Filled Out ✓
2) Oxygen between 20-23.5% ✓
3) Combustible Gases Below 10% LEL ✓
4) Permissible Levels of Toxic Gases (List)
5) Other

PRCS SAFE FOR ENTRY

DATE/TIME 11/24/95 NAME ENTRY SUPERVISOR Tony Vorheis SIGNATURE [signature]

CURRENT ENTRY SUPERVISOR (IF DIFFERENT) ____

ENTRY PERMIT EXPIRES DATE/TIME ____/____ (No longer than 1 shift)

ENTRY PERMIT CANCELLED

DATE/TIME ____/____ SIGNATURE ____

REASON (✓) ____ Work Complete ____ Authorized Conditions not met ____ Incident

DESCRIBE PROBLEMS DURING ENTRY AND RESOLUTION

No Problems

RECLASSIFICATION TO NON-PERMIT-REQUIRED CONFINED SPACE
Describe hazard removal methods, without use of ventilation. ____

TESTING VERIFICATION SHOWN AT TIME ____ ON TEST DATA CHART ABOVE.

DATE/TIME ____/____ ENTRY SUPERVISOR SIGNATURE ____

REVIEWED BY [signature] DATE 2/25/95

2-32

ATTACHMENT 4

LOCKOUT/TAGOUT FOR ELECTRICAL EQUIPMENT

Job: USACE SNEAD 2/25/95

Device: High Lift

Location: Baghouse

Authorized Person: Art Crutchfield

PREPARATION FOR SHUTDOWN

1. Determine power type and shutoff location
2. Determine if there is more than one energy source
3. Determine magnitude of power (voltage)
4. Notify affected employees in the area that equipment will be under lockout for maintenance.
5. Shutoff power sources to machine.

LOCKOUT/TAGOUT

6. Lock and tag main power switches in the OFF position, remove fuses.
7. Verify that no power is available to the equipment using a voltmeter, if necessary.
8. Drain devices such as capacitor banks.
9. Verify that these devices have no stored energy by use of the voltmeter.
10. Repair equipment.

RETURN TO SERVICE

11. Be sure all connections are made and any unused tools and equipment are removed.
12. Remove lock if necessary to verify machine is repaired. The maintenance employee, while verifying the machine is repaired cannot leave the immediate area.
13. Remove tag from machine.
14. Notify employees in the area that the equipment is available.

Authorized Person:

Site Supervisor:

IT Corporation is a wholly owned subsidiary of International Technology Corporation

ATTACHMENT 4

LOCKOUT/TAGOUT FOR ELECTRICAL EQUIPMENT

Job: USACE 2/25/95

Device: Undercrusher

Location: LTD unit

Authorized Person: [signature]

PREPARATION FOR SHUTDOWN

1. Determine power type and shutoff location
2. Determine if there is more than one energy source
3. Determine magnitude of power (voltage)
4. Notify affected employees in the area that equipment will be under lockout for maintenance.
5. Shutoff power sources to machine.

LOCKOUT/TAGOUT

6. Lock and tag main power switches in the OFF position, remove fuses.
7. Verify that no power is available to the equipment using a voltmeter, if necessary.
8. Drain devices such as capacitor banks.
9. Verify that these devices have no stored energy by use of the voltmeter.
10. Repair equipment.

RETURN TO SERVICE

11. Be sure all connections are made and any unused tools and equipment are removed.
12. Remove lock if necessary to verify machine is repaired. The maintenance employee, while verifying the machine is repaired cannot leave the immediate area.
13. Remove tag from machine.
14. Notify employees in the area that the equipment is available.

Authorized Person: Wayne Rawlinson

Site Supervisor:

2-78

INTERNATIONAL TECHNOLOGY CORPORATION

Page ___ of ___

Procedure No. HS300
Revision No. 0
Date 03/01/93
Page 21a of 21

ENTRY PERMIT
PERMIT-REQUIRED CONFINED SPACE (PRCS)

ATTACHMENT 3

Division/Location _____ Job No. 519200
Customer USACE Address _____
Location of Job Seneca Identity of PRCS _____
Describe Hazards of PRCS (Chemical, Physical) _____

Chemical Introduced Into Space _____

Purpose This Permit Authorized Clean out underwater

CHECKLIST	YES	DOES NOT APPLY
All lines leading to and from confined space have been blinded or disconnected		✓
Electrical service disconnected or locked out	✓	
All grounding and bonding cables in place	✓	
All lighting, fittings, power equipment, and extension cords are explosion-proof	✓	
Ground Fault Circuit Indicator (GFCI) checked and functioning	✓	
All ignition sources have been isolate	✓	
All respiratory equipment and alarms checked and functional	✓	✓
All safety harnesses and life lines checked	✓	
All required PPE checked and in use	✓	
All entrants are confined space trained	✓	
All entrants are trained in the use, care, and limitations of respirators and PPE	✓	
Attendant trained in emergency procedures	✓	
Attendant(s) trained in rescue procedures	✓	
Outside rescue service will be used and they have been notified of this entry	✓	
Appropriate rescue equipment available and checked	✓	
Ventilation system in use and effective		✓
Entrant(s) can achieve a gas-tight seal with respirator	✓	
Entrant(s) are not wearing contact lenses	✓	
All tests have been completed and indicate that entrance requirements have been met	✓	
Appropriate warning signs have been posted and unauthorized personnel have been excluded from the PRCS and area	✓	

PERSONAL PROTECTIVE EQUIPMENT (Circle)

EYE/FACE
Chemical Goggles
Face Shield
Safety Glasses

EXTREMITIES
Hard Hat ✓
Gloves (Material Nitrile)
Hands
Boots (Material Neoprene)
Booties

BODY
Suit (Level ?, Material Poly)

RESPIRATORY
SCBA
Air Line
Egress System
Air Purifying (Cartridge _____)
Powered Air Purifying (Cartridge Organic GMCH)

OTHER
Hearing Protection
Harness & Lifeline ✓
Chest or Parachute

RESCUE EQUIPMENT
Mechanical Extraction Device
First Aid Kit
SCBA
Other (Specify) Base Fire Dept.

NON-IT RESCUE TEAM
Instructions to Summon Rescue
BASE FIRE DEPT #117

COMMUNICATION
Lifeline "Tug" Signals (See HASP)
Air Powered Horn Signals (See HASP)
Other Radio

IF THE ANSWER TO ANY OF THE ABOVE QUESTIONS IS NO, ENTRY IS NOT PERMITTED.

OTHER PERMITS ISSUED FOR WORK IN PRCS: underwater Barge.

OTHER HAZARD CONTROL PROCEDURES OR INSTRUCTIONS: _____

2-3

INTERNATIONAL TECHNOLOGY CORPORATION

TEST DATA
Oxygen, Flammability and Toxic Contaminants

Page __ of __ Procedure No. HS300
Revision No. 0
Date 03/01/93
Page 21b of 21

Time	Percent Oxygen	Percent LEL	PEG	PEG	PEG	PEG	PEG	Initials	Comments
830	21	Ø							

AUTHORIZED ENTRANTS
Bill Williams

AUTHORIZED ATTENDANTS
Smiley Stan

RESCUE PERSONNEL
Art Cuthbert
BASE FIRE DEPT

Diagram the confined space. Indicate location of manways and ventilators. Indicate location(s) where tests conducted.

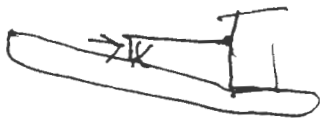

)(- Manway
= - Ventilator
X - Test Location

ACCEPTABLE ENTRY CONDITIONS

1) Entry Permit Completely Filled Out
2) Oxygen between 20-23.5%
3) Combustible Gases Below 10% LEL
4) Permissible Levels of Toxic Gases (List)
5) Other

PRCS SAFE FOR ENTRY

DATE/TIME 2/25/95 NAME ENTRY SUPERVISOR Tim Mead SIGNATURE

CURRENT ENTRY SUPERVISOR (IF DIFFERENT) Wayne Rawlinson

ENTRY PERMIT EXPIRES DATE/TIME 2/25/95 (No longer than 1 shift)

ENTRY PERMIT CANCELLED

DATE/TIME ___/___ SIGNATURE

REASON (✓) ___ Work Complete ___ Authorized Conditions not met ___ Incident

DESCRIBE PROBLEMS DURING ENTRY AND RESOLUTION

RECLASSIFICATION TO NON-PERMIT-REQUIRED CONFINED SPACE
Describe hazard removal methods, without use of ventilation.

TESTING VERIFICATION SHOWN AT TIME ___ ON TEST DATA CHART ABOVE.

DATE/TIME ___/___ ENTRY SUPERVISOR SIGNATURE

REVIEWED BY Will A[illegible] DATE 2/26/95

2-32

INTERNATIONAL TECHNOLOGY CORPORATION

ENTRY PERMIT
PERMIT-REQUIRED CONFINED SPACE (PRCS)

Page __ of __

Procedure No. HS300
Revision No. 0
Date 03/01/93
Page 21a of 21

ATTACHMENT 3

Division/Location _____ Job No. 519200
Customer USACE Address _____
Location of Job _____ Identity of PRCS _____
Describe Hazards of PRCS (Chemical, Physical) _____

Chemical Introduced Into Space _____

Purpose This Permit Authorized Clean Out underground

CHECKLIST	YES	DOES NOT APPLY
All lines leading to and from confined space have been blinded or disconnected		TC
Electrical service disconnected or locked out	TC	
All grounding and bonding cables in place	TC	
All lighting, fittings, power equipment, and extension cords are explosion-proof	TC	
Ground Fault Circuit Indicator (GFCI) checked and functioning	TC	
All ignition sources have been isolate	TC	
All respiratory equipment and alarms checked and functional	TC	
All safety harnesses and life lines checked	TC	
All required PPE checked and in use	TC	
All entrants are confined space trained	TC	
All entrants are trained in the use, care, and limitations of respirators and PPE	TC	
Attendant trained in emergency procedures	TC	
Attendant(s) trained in rescue procedures	TC	
Outside rescue service will be used and they have been notified of this entry	TC	
Appropriate rescue equipment available and checked	TC	
Ventilation system in use and effective	~~TC~~	TC
Entrant(s) can achieve a gas-tight seal with respirator	TC	
Entrant(s) are not wearing contact lenses	TC	
All tests have been completed and indicate that entrance requirements have been met	TC	
Appropriate warning signs have been posted and unauthorized personnel have been excluded from the PRCS and area	TC	

IF THE ANSWER TO ANY OF THE ABOVE QUESTIONS IS NO, ENTRY IS NOT PERMITTED.

PERSONAL PROTECTIVE EQUIPMENT (Circle)

EYE/FACE
Chemical Goggles
Face Shield
Safety Glasses

EXTREMITIES
Hard Hat
Gloves (Material _____)
Hoods
Boots (Material _____)
Booties

BODY
Suit (Level C, Material poly)

RESPIRATORY
SCBA
Air Line
Egress System
Air Purifying (Cartridge _____)
Powered Air Purifying (Cartridge Organic)

OTHER
Hearing Protection
Harness & Lifeline ✓
Chest or Parachute

RESCUE EQUIPMENT
Mechanical Extraction Device
First Aid Kit
SCBA
Other (Specify) Base Fire Dept

NON-IT RESCUE TEAM
Instructions to Summon Rescue
BASE FIRE Dept #117

COMMUNICATION
Lifeline "Tug" Signals (See HASP)
Air Powered Horn Signals (See HASP)
Other Radios

OTHER PERMITS ISSUED FOR WORK IN PRCS: underground Conveyor

OTHER HAZARD CONTROL PROCEDURES OR INSTRUCTIONS: _____

2-21

INTERNATIONAL TECHNOLOGY CORPORATION

TEST DATA
Oxygen, Flammability and Toxic Contaminants

Page __ of __ Procedure No. HS300
Revision No. 0
Date 03/01/93
Page 21b of 21

Time	Percent Oxygen	Percent LEL	PEG	PEG	PEG	PEG	PEG	Initials	Comments
1000	21	0							

AUTHORIZED ENTRANTS
Teri Obrian

AUTHORIZED ATTENDANTS
Applebee

RESCUE PERSONNEL
Pete Fison
BASE FIRE DEPT.

Diagram the confined space. Indicate location of manways and ventilators. Indicate location(s) where tests conducted.

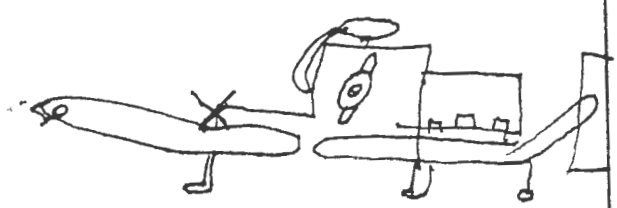

)(- Manway
= - Ventilator
X - Test Location

ACCEPTABLE ENTRY CONDITIONS

1) Entry Permit Completely Filled Out
2) Oxygen between 20-23.5%
3) Combustible Gases Below 10% LEL
4) Permissible Levels of Toxic Gases (List)
5) Other

PRCS SAFE FOR ENTRY

DATE/TIME 2 / 1255 NAME ENTRY SUPERVISOR Applebee SIGNATURE

CURRENT ENTRY SUPERVISOR (IF DIFFERENT)

ENTRY PERMIT EXPIRES DATE/TIME 2 / 1255 (No longer than 1 shift)

ENTRY PERMIT CANCELLED

DATE/TIME ___/___ SIGNATURE

REASON (✓) ___ Work Complete ___ Authorized Conditions not met ___ Incident

DESCRIBE PROBLEMS DURING ENTRY AND RESOLUTION

RECLASSIFICATION TO NON-PERMIT-REQUIRED CONFINED SPACE
Describe hazard removal methods, without use of ventilation.

TESTING VERIFICATION SHOWN AT TIME ___ ON TEST DATA CHART ABOVE.

DATE/TIME ___/___ ENTRY SUPERVISOR SIGNATURE

REVIEWED BY DATE 2/26/95

2-32

CORPORATION

HOT WORK PERMIT

Night Shift

Operating Area LTTD Good for this date only 02-27 19 95

Specific vessel or equipment Under crusher / Hammer Mill unit.

Work to be done Remove Diverter Door. Note Not able to start job on P.M. shift because torch tip is screwed up. Permit pulled. A.M. shift to re-permit before hot job.

TESTS

STATE EXACT LOCATION OF TEST	TIME	PERCENT LOWER EXPLOSION LIMIT	PERCENT OXYGEN	OTHERS		INITIA
Under Crusher + 35' Radius	0640	0%	21%			HP

CHECK LIST

	Initial: Yes	Initial: Does Not Apply
Operations/plant personnel have been informed of work to be performed	HP	
All tanks/lines/valves are disconnected, blinded, or locked out	HP	
ment and all attached piping has been cleaned and purged with: (x blank) Water ____ Steam ____ Inert gas ____ Air ____		HP
Electrical service has been locked out and tagged.	HP	
All grounding/bonding wire in place.	HP	
Surrounding equipment and operations are safe for hot work.	HP	
No open vessels or lines within 35 feet of hot work area.	HP	
No combustible items within 35 feet of hot work area or covered with wetted tarpaulins.	HP	
Fire Watch has been provided by Contractor.	HP	
No flammable gases greater than 10% LEL in hot work area.	HP	
All requirements of ITCPRO 9531 for Confined Space Entry have been met and ITC Form 9531-1 has been completed and posted.		HP
If vessel contains leaded product, all requirements of ITCPRO 9531.3 have been met.		

PERSONNEL PROTECTIVE EQUIPMENT

EYES
- ☐ Chemical Goggles
- ☐ Face Shield
- ☐ Safety Glasses
- ☐ Welders Mask

BODY
- ☐ Environmental Suit: ☐ PVC ☐ Buna
- ☐ Heavy Suit: ☐ PVC ☐ Neoprene
- ☐ Light PVC Suit
- ☐ Yellow Tyvek Suit
- ☐ White Tyvek Suit

EXTREMITIES
- ☐ Hard Hat
- ☐ Gloves
- ☐ Boots ☐ PVC ☐ Neoprene
- ☐ Hoods ☐ PVC ☐ Neoprene
- ☐ Foot Coverings, Disposable

RESPIRATORY
- ☐ Self-Contained Respirator
- ☐ Hose Line Respirator
- ☐ Hose Line W/Egress
- ☐ Cartridge Respirator

Cartridge Type ____
- ☐ Dust Respirator

EQUIPMENT REQUIRED
- ☐ Fire Extinguisher
- ☐ Fire Blanket
- ☐ Charged Water Hose
- ☐ Combustible Gas Indicator

Special Instructions: Terry torching / Vince Fire Watch
Extinguisher + Proper ~~Welder~~ Welding Gear

Co- d by Hammersteel Hyst — Name Printed
Hammersteel Hyst — Signature
02-27-95 — Date

Manager

ITC FORM 9571-1
CS/103-5-85

195-

ATTACHMENT 4

LOCKOUT/TAGOUT FOR ELECTRICAL EQUIPMENT

Job: SEAD 2/26/95

Device: undercrusher / crusher

Location: LTTD UNIT.

Authorized Person: Bill Williams

PREPARATION FOR SHUTDOWN

1. Determine power type and shutoff location
2. Determine if there is more than one energy source
3. Determine magnitude of power (voltage)
4. Notify affected employees in the area that equipment will be under lockout for maintenance.
5. Shutoff power sources to machine.

LOCKOUT/TAGOUT

6. Lock and tag main power switches in the OFF position, remove fuses.
7. Verify that no power is available to the equipment using a voltmeter, if necessary.
8. Drain devices such as capacitor banks.
9. Verify that these devices have no stored energy by use of the voltmeter.
10. Repair equipment.

RETURN TO SERVICE

11. Be sure all connections are made and any unused tools and equipment are removed.
12. Remove lock if necessary to verify machine is repaired. The maintenance employee, while verifying the machine is repaired cannot leave the immediate area.
13. Remove tag from machine.
14. Notify employees in the area that the equipment is available.

Authorized Person: Bill Williams

Site Supervisor:

IT Corporation is a wholly owned subsidiary of International Technology Corporation

ATTACHMENT 4

LOCKOUT/TAGOUT FOR ELECTRICAL EQUIPMENT

Job: 519200 Night shift. 2/26/95

Device: Undercrusher

Location: LTTD

Authorized Person: Hopkins / Terry

PREPARATION FOR SHUTDOWN

1. Determine power type and shutoff location
2. Determine if there is more than one energy source
3. Determine magnitude of power (voltage)
4. Notify affected employees in the area that equipment will be under lockout for maintenance.
5. Shutoff power sources to machine.

LOCKOUT/TAGOUT

6. Lock and tag main power switches in the OFF position, remove fuses.
7. Verify that no power is available to the equipment using a voltmeter, if necessary.
8. Drain devices such as capacitor banks.
9. Verify that these devices have no stored energy by use of the voltmeter.
10. Repair equipment.

RETURN TO SERVICE

11. Be sure all connections are made and any unused tools and equipment are removed.
12. Remove lock if necessary to verify machine is repaired. The maintenance employee, while verifying the machine is repaired cannot leave the immediate area.
13. Remove tag from machine.
14. Notify employees in the area that the equipment is available.

Authorized Person:

Site Supervisor: P.M. Shift

2-78

ATTACHMENT 4

LOCKOUT/TAGOUT FOR ELECTRICAL EQUIPMENT

Job: 519200 Night shift. 2/26/95

Device: Both L.P. Pumps to LTTD

Location: LTTD

Authorized Person: Hopkins / Terry

PREPARATION FOR SHUTDOWN

1. Determine power type and shutoff location
2. Determine if there is more than one energy source
3. Determine magnitude of power (voltage)
4. Notify affected employees in the area that equipment will be under lockout for maintenance.
5. Shutoff power sources to machine.

LOCKOUT/TAGOUT

6. Lock and tag main power switches in the OFF position, remove fuses.
7. Verify that no power is available to the equipment using a voltmeter, if necessary.
8. Drain devices such as capacitor banks.
9. Verify that these devices have no stored energy by use of the voltmeter.
10. Repair equipment.

RETURN TO SERVICE

11. Be sure all connections are made and any unused tools and equipment are removed.
12. Remove lock if necessary to verify machine is repaired. The maintenance employee, while verifying the machine is repaired cannot leave the immediate area.
13. Remove tag from machine.
14. Notify employees in the area that the equipment is available.

Authorized Person:

Site Supervisor: Danner Scott Hyde

2-78

ATTACHMENT 4

LOCKOUT/TAGOUT FOR ELECTRICAL EQUIPMENT

Job: 519200 Night shift 2/26/95

Device: Drier

Location: LTTD

Authorized Person: Hopkins / Terry

PREPARATION FOR SHUTDOWN

1. Determine power type and shutoff location
2. Determine if there is more than one energy source
3. Determine magnitude of power (voltage)
4. Notify affected employees in the area that equipment will be under lockout for maintenance.
5. Shutoff power sources to machine.

LOCKOUT/TAGOUT

6. Lock and tag main power switches in the OFF position, remove fuses.
7. Verify that no power is available to the equipment using a voltmeter, if necessary.
8. Drain devices such as capacitor banks.
9. Verify that these devices have no stored energy by use of the voltmeter.
10. Repair equipment.

RETURN TO SERVICE

11. Be sure all connections are made and any unused tools and equipment are removed.
12. Remove lock if necessary to verify machine is repaired. The maintenance employee, while verifying the machine is repaired cannot leave the immediate area.
13. Remove tag from machine.
14. Notify employees in the area that the equipment is available.

Authorized Person:

Site Supervisor: P.M. Shift

2-78

ATTACHMENT 4

LOCKOUT/TAGOUT FOR ELECTRICAL EQUIPMENT

Job: 519200 Night Shift 2/26/95

Device: Hammer Mill

Location: LTTD

Authorized Person: Hopkins / Terry

PREPARATION FOR SHUTDOWN

1. Determine power type and shutoff location
2. Determine if there is more than one energy source
3. Determine magnitude of power (voltage)
4. Notify affected employees in the area that equipment will be under lockout for maintenance.
5. Shutoff power sources to machine.

LOCKOUT/TAGOUT

6. Lock and tag main power switches in the OFF position, remove fuses.
7. Verify that no power is available to the equipment using a voltmeter, if necessary.
8. Drain devices such as capacitor banks.
9. Verify that these devices have no stored energy by use of the voltmeter.
10. Repair equipment.

RETURN TO SERVICE

11. Be sure all connections are made and any unused tools and equipment are removed.
12. Remove lock if necessary to verify machine is repaired. The maintenance employee, while verifying the machine is repaired cannot leave the immediate area.
13. Remove tag from machine.
14. Notify employees in the area that the equipment is available.

Authorized Person:

Site Supervisor: Danner Scott Hyt P.M. Shift

2-78

INTERNATIONAL TECHNOLOGY CORPORATION

ENTRY PERMIT
PERMIT-REQUIRED CONFINED SPACE (PRCS)

Page ___ of ___

Procedure No. HS300
Revision No. 0
Date 03/01/93
Page 21a of 21

ATTACHMENT 3

Division/Location C&K SEAD Job No. 519200
Customer USACE Address
Location of Job Seneca Army Depot Identity of PRCS
Describe Hazards of PRCS (Chemical, Physical)

Chemical Introduced Into Space PAH's PEC

Purpose This Permit Authorized Clean out of Hammer Mill

CHECKLIST	YES	DOES NOT APPLY
All lines leading to and from confined space have been blinded or disconnected		T.M
Electrical service disconnected or locked out	T.M	
All grounding and bonding cables in place	T.M	
All lighting, fittings, power equipment, and extension cords are explosion-proof		T.M
Ground Fault Circuit Indicator (GFCI) checked and functioning	T.M	
All ignition sources have been isolate	T.M	
All respiratory equipment and alarms checked and functional	T.M	
All safety harnesses and life lines checked		T.M
All required PPE checked and in use	T.M	
All entrants are confined space trained	T.M	
All entrants are trained in the use, care, and limitations of respirators and PPE	T.M	
Attendant trained in emergency procedures	T.M	
Attendant(s) trained in rescue procedures	T.M	
Outside rescue service will be used and they have been notified of this entry	T.M	
Appropriate rescue equipment available and checked	T.M	
Ventilation system in use and effective	T.M	
Entrant(s) can achieve a gas-tight seal with respirator	T.M	
Entrant(s) are not wearing contact lenses	T.M	
All tests have been completed and indicate that entrance requirements have been met	T.M	
Appropriate warning signs have been posted and unauthorized personnel have been excluded from the PRCS and area	T.M	

PERSONAL PROTECTIVE EQUIPMENT (Circle)

EYE/FACE
Chemical Goggles
Face Shield
Safety Glasses

EXTREMITIES
Hard Hat ✓
Gloves (Material ✓)
Hoods
Boots (Material ✓)
Booties

BODY
Suit (Level C, Material Poly)

RESPIRATORY
SCBA
Air Line
Egress System
Air Purifying (Cartridge Organic)
Powered Air Purifying (Cartridge ___)

OTHER
Hearing Protection
Harness & Lifeline
Chest or Parachute

RESCUE EQUIPMENT
Mechanical Extraction Device
First Aid Kit ✓
SCBA
Other (Specify) ___

NON-IT RESCUE TEAM
Instructions to Summon Rescue
177

COMMUNICATION
Lifeline "Tug" Signals (See HASP)
Air Powered Horn Signals (See HASP)
Other Radio

IF THE ANSWER TO ANY OF THE ABOVE QUESTIONS IS NO, ENTRY IS NOT PERMITTED.

OTHER PERMITS ISSUED FOR WORK IN PRCS:

OTHER HAZARD CONTROL PROCEDURES OR INSTRUCTIONS:

2-21

INTERNATIONAL TECHNOLOGY CORPORATION

TEST DATA
Oxygen, Flammability and Toxic Contaminant(s)

Page __ of __ Procedure No. HS300
Revision No. 0
Date 03/01/93
Page 21b of 21

Time	Percent Oxygen	Percent LEL	PEG	PEG	PEG	PEG	PEG	Initials	Comments
25	21.3	0						T.M	

AUTHORIZED ENTRANTS
Bill williams
Emylie Gram

AUTHORIZED ATTENDANTS
Art Cruchfield

RESCUE PERSONNEL

Diagram the confined space, indicate location of manways and ventilators. Indicate location(s) where tests conducted.

) (- Manway
∞ - Ventilator
X - Test Location

ACCEPTABLE ENTRY CONDITIONS

1) Entry Permit Completely Filled Out
2) Oxygen between 20-23.5%
3) Combustible Gases Below 10% LEL
4) Permissible Levels of Toxic Gases (List)

5) Other

PRCS SAFE FOR ENTRY
DATE/TIME 1825 / 12-26-95 NAME ENTRY SUPERVISOR [signature] SIGNATURE [signature]
CURRENT ENTRY SUPERVISOR (IF DIFFERENT)
ENTRY PERMIT EXPIRES DATE/TIME 625 / 12-27 (No longer than 1 shift)

ENTRY PERMIT CANCELLED
DATE/TIME ___/___ SIGNATURE
REASON (✓) ___ Work Complete ___ Authorized Conditions not met ___ Incident

DESCRIBE PROBLEMS DURING ENTRY AND RESOLUTION

RECLASSIFICATION TO NON-PERMIT-REQUIRED CONFINED SPACE
Describe hazard removal methods, without use of ventilation.

TESTING VERIFICATION SHOWN AT TIME ___ ON TEST DATA CHART ABOVE.
DATE/TIME 1830 / ___ ENTRY SUPERVISOR SIGNATURE [signature]

REVIEWED BY ___ DATE ___

2-32

Night Shift

INTERNATIONAL TECHNOLOGY CORPORATION

ENTRY PERMIT
PERMIT-REQUIRED CONFINED SPACE (PRCS)

Page __ of __

Procedure No. HS300
Revision No. 0
Date 03/01/93
Page 21a of 21

ATTACHMENT 3

Division/Location GLK SEAD Job No. 519200
Customer USACE Address
Location of Job SENCA Army Depot Identity of PRCS
Describe Hazards of PRCS (Chemical, Physical)

Chemical Introduced Into Space PAHIS DEC

Purpose This Permit Authorized Air Chisel Out

CHECKLIST	YES	DOES NOT APPLY
All lines leading to and from confined space have been blinded or disconnected		TJC
Electrical service disconnected or locked out	TJC	
All grounding and bonding cables in place	TJC	
All lighting, fittings, power equipment, and extension cords are explosion-proof		TJC
Ground Fault Circuit Indicator (GFCI) checked and functioning	TJC	
All iginition sources have been isolate	TJC	
All respiratory equipment and alarms checked and functional	TJC	
All safety harnesses and life lines checked		TJC
All required PPE checked and in use	TJC	
All entrants are confined space trained	TJC	
All entrants are trained in the use, care, and limitations of respirators and PPE	TJC	
Attendant trained in emergency procedures	TJC	
Attendant(s) trained in rescue procedures	TJC	
Outside rescue service will be used and they have been notified of this entry	TJC	
Appropriate rescue equipment available and checked	TJC	
Ventilation system in use and effective	TJC	
Entrant(s) can achieve a gas-tight seal with respirator	TJC	
Entrant(s) are not wearing contact lenses	TJC	
All tests have been completed and indicate that entrance requirements have been met	TJC	
Appropriate warning signs have been posted and unauthorized personnel have been excluded from the PRCS and area	TJC	

IF THE ANSWER TO ANY OF THE ABOVE QUESTIONS IS NO, ENTRY IS NOT PERMITTED.

PERSONAL PROTECTIVE EQUIPMENT (Circle)

EYE/FACE
Chemical Goggles
Face Shield
Safety Glasses

EXTREMITIES
Hard Hat
Gloves (Material A)
Hoods
Boots (Material A)
Booties

BODY
Suit (Level C, Material Poly)

RESPIRATORY
SCBA
Air Line
Egress System
Air Purifying (Cartridge Organics)
Powered Air Purifying (Cartridge ____)

OTHER
Hearing Protection
Harness & Lifeline
Chest or Parachute

RESCUE EQUIPMENT
Mechanical Extraction Device
First Aid Kit
SCBA
Other (Specify) ____

NON-IT RESCUE TEAM
Instructions to Summon Rescue 777

COMMUNICATION
Lifeline "Tug" Signals (See HASP)
Air Powered Horn Signals (See HASP)
Other Radio

OTHER PERMITS ISSUED FOR WORK IN PRCS:

OTHER HAZARD CONTROL PROCEDURES OR INSTRUCTIONS:

2-01

INTERNATIONAL TECHNOLOGY CORPORATION

TEST DATA
Oxygen, Flammability and Toxic Contaminants

Page __ of __ Procedure No. HS300
Revision No. 0
Date 03/01/93
Page 21b of 21

Time	Percent Oxygen	Percent LEE	PEG	PEG	PEG	PEG	PEG	Initials	Comments
700	21.0	0						[illegible]	

AUTHORIZED ENTRANTS

Terry O'Brien
[illegible]

AUTHORIZED ATTENDANTS

[illegible]
Scott [illegible]

RESCUE PERSONNEL

Diagram the confined space, indicate location of manways and ventilators. Indicate location(s) where tests conducted.

) (- Manway

∞ - Ventilator

X - Test Location

ACCEPTABLE ENTRY CONDITIONS

1) Entry Permit Completely Filled Out
2) Oxygen between 20-23.5%
3) Combustible Gases Below 10% LEL
4) Permissible Levels of Toxic Gases (List)

5) Other

PRCS SAFE FOR ENTRY

DATE/TIME 2/26/95 2:00 NAME ENTRY SUPERVISOR [illegible] SIGNATURE [illegible]

CURRENT ENTRY SUPERVISOR (IF DIFFERENT) ____

ENTRY PERMIT EXPIRES DATE/TIME 6 / 2[illegible] (No longer than 1 shift)

ENTRY PERMIT CANCELLED

DATE/TIME ____/____ SIGNATURE ____

REASON (✓) ____ Work Complete ____ Authorized Conditions not met ____ Incident

DESCRIBE PROBLEMS DURING ENTRY AND RESOLUTION

RECLASSIFICATION TO NON-PERMIT-REQUIRED CONFINED SPACE
Describe hazard removal methods, without use of ventilation. ____

TESTING VERIFICATION SHOWN AT TIME ____ ON TEST DATA CHART ABOVE.

DATE/TIME ____/____ ENTRY SUPERVISOR SIGNATURE ____

REVIEWED BY ____ DATE ____

2-32

TECHNOLOGY CORPORATION

HOT WORK PERMIT

Operating Area 140 unit Good for this date only 2-27 19 95

pecific vessel or equipment Dryer

Work to be done CUT Bolts off & replace

TESTS

STATE EXACT LOCATION OF TEST	TIME	PERCENT LOWER EXPLOSION LIMIT	PERCENT OXYGEN	OTHERS		INITIA
in & around Dryer	907	0	20.9			JM

CHECK LIST

	Initial: Yes	Initial: Does Not Apply
Operations/plant personnel have been informed of work to be performed	J.M	
All tanks/lines/valves are disconnected, blinded, or locked out.	J.M	
ipment and all attached piping has been cleaned and purged with: eck blank) Water___ Steam___ Inert gas___ Air		J.M
Electrical service has been locked out and tagged.	J.M	
All grounding/bonding wire in place.	J.M	
Surrounding equipment and operations are safe for hot work.	J.M	
No open vessels or lines within 35 feet of hot work area.	J.M	
No combustible items within 35 feet of hot work area or covered with wetted tarpaulins.	J.M	
Fire Watch has been provided by Contractor.	J.M	
No flammable gases greater than 10% LEL in hot work area.	J.M	
All requirements of ITCPRO 9531 for Confined Space Entry have been met and ITC Form 9531-1 has been completed and posted.	J.M	
If vessel contains leaded product, all requirements of ITCPRO 9531.3 have been met.		

PERSONNEL PROTECTIVE EQUIPMENT

EYES
- ☐ Chemical Goggles
- ☐ Face Shield
- ☐ Safety Glasses
- ☐ Welders Mask

BODY
- ☐ Environmental Suit: ☐ PVC ☐ But
- ☐ Heavy Suit: ☐ PVC ☐ Neoprene
- ☐ Light PVC Suit
- ☑ Yellow Tyvek Suit
- ☐ White Tyvek Suit

EXTREMITIES
- ☑ Hard Hat
- ☑ Gloves
- ☑ Boots ☐ PVC ☑ Neoprene
- ☐ Hoods ☐ PVC ☐ Neoprene
- ☐ Foot Coverings, Disposable

RESPIRATORY
- ☑ Self-Contained Respirator
- ☐ Hose Line Respirator
- ☐ Hose Line W/Egress
- ☐ Cartridge Respirator

Cartridge Type organic
- ☐ Dust Respirator

EQUIPMENT REQUIRED
- ☑ Fire Extinguisher
- ☐ Fire Blanket
- ☐ Charged Water Hose
- ☐ Combustible Gas Indicator

Special Instructions:

Co ted by: Tim Meade (Name Printed) Tim Meade (Signature) 2-27-95 (Date)

Manager

ITC FORM 9571-1
CS/103-5-85

195-

INTERNATIONAL TECHNOLOGY CORPORATION

ENTRY PERMIT
PERMIT-REQUIRED CONFINED SPACE (PRCS)

Procedure No. HS300
Revision No. 0
Date 03/01/93
Page 21a of 21

ATTACHMENT 3

Division/Location CTR
Job No. 519200
Customer USACE
Address
Location of Job SEAD
Identity of PRCS 5 Hammer Mill
Describe Hazards of PRCS (Chemical, Physical)

Chemical Introduced into Space PAHs VOC

Purpose This Permit Authorized clean out Hammer Mill

CHECKLIST	YES	DOES NOT APPLY
All lines leading to and from confined space have been blinded or disconnected	T.M	
Electrical service disconnected or locked out	T.M	
All grounding and bonding cables in place	T.M	
All lighting, fittings, power equipment, and extension cords are explosion-proof		T.M
Ground Fault Circuit Indicator (GFCI) checked and functioning	T.M	
All ignition sources have been isolate	T.M	
All respiratory equipment and alarms checked and functional	T.M	
All safety harnesses and life lines checked	T.M	
All required PPE checked and in use	T.M	
All entrants are confined space trained	T.M	
All entrants are trained in the use, care, and limitations of respirators and PPE	T.M	
Attendant trained in emergency procedures	T.M	
Attendant(s) trained in rescue procedures	T.M	
Outside rescue service will be used and they have been notified of this entry	T.M	
Appropriate rescue equipment available and checked	T.M	
Ventilation system in use and effective	T.M	
Entrant(s) can achieve a gas-tight seal with respirator	T.M	
Entrant(s) are not wearing contact lenses	T.M	
All tests have been completed and indicate that entrance requirements have been met	T.M	
Appropriate warning signs have been posted and unauthorized personnel have been excluded from the PRCS and area	T.M	

IF THE ANSWER TO ANY OF THE ABOVE QUESTIONS IS NO, ENTRY IS NOT PERMITTED.

PERSONAL PROTECTIVE EQUIPMENT (Circle)

EYE/FACE
Chemical Goggles
Face Shield
Safety Glasses

EXTREMITIES
Hard Hat
Gloves (Material nitrile)
Hoods
Boots (Material Neoprene)
Booties

BODY
Suit (Level C, Material Poly)

RESPIRATORY
SCBA
Air Line
Egress System
Air Purifying (Cartridge organic)
Powered Air Purifying (Cartridge)

OTHER
Hearing Protection
Harness & Lifeline
Chest or Parachute

RESCUE EQUIPMENT
Mechanical Extraction Device
First Aid Kit ✓
SCBA
Other (Specify)

NON-IT RESCUE TEAM
Instructions to Summon Rescue
Base 117

COMMUNICATION
Lifeline "Tug" Signals (See HASP)
Air Powered Horn Signals (See HASP)
Other Radio

OTHER PERMITS ISSUED FOR WORK IN PRCS:

OTHER HAZARD CONTROL PROCEDURES OR INSTRUCTIONS:

2-0

INTERNATIONAL TECHNOLOGY CORPORATION

TEST DATA
Oxygen, Flammability and Toxic Contaminants

Page __ of __ Procedure No. HS300
Revision No. 0
Date 03/01/93
Page 21b of 21

Time	Percent Oxygen	Percent LEL	PEG	PEG	PEG	PEG	PEG	Initials	Comments
1300	20.9	0							

AUTHORIZED ENTRANTS
Art Crutchfield
Bill Williams

AUTHORIZED ATTENDANTS
Art Crutchfield
Bill Williams

RESCUE PERSONNEL
Base Fire Dept.

Diagram the confined space, indicate location of manways and ventilators. Indicate location(s) where tests conducted.

)(- Manway
= - Ventilator
X - Test Location

ACCEPTABLE ENTRY CONDITIONS

1) Entry Permit Completely Filled Out
2) Oxygen between 20-23.5%
3) Combustible Gases Below 10% LEL
4) Permissible Levels of Toxic Gases (List)
5) Other

PRCS SAFE FOR ENTRY
DATE/TIME 830 / 12-27-95 NAME ENTRY SUPERVISOR Tim Meade SIGNATURE T. Meade
CURRENT ENTRY SUPERVISOR (IF DIFFERENT) Wayne Rauterson
ENTRY PERMIT EXPIRES DATE/TIME 0830 / 12-27-95 (No longer than 1 shift)

ENTRY PERMIT CANCELLED
DATE/TIME 12-27-95 / 1730 SIGNATURE Tim Meade
REASON ✓ End of shift ____ Work Complete ____ Authorized Conditions not met ____ Incident

DESCRIBE PROBLEMS DURING ENTRY AND RESOLUTION

RECLASSIFICATION TO NON-PERMIT-REQUIRED CONFINED SPACE
Describe hazard removal methods, without use of ventilation.

TESTING VERIFICATION SHOWN AT TIME ____ ON TEST DATA CHART ABOVE.
DATE/TIME ____ / ____ ENTRY SUPERVISOR SIGNATURE

REVIEWED BY Will A. [illegible] DATE 2/28/95

2-32

INTERNATIONAL TECHNOLOGY CORPORATION

ENTRY PERMIT
PERMIT-REQUIRED CONFINED SPACE (PRCS)

Procedure No. HS300
Revision No. 0
Date 03/01/93
Page 21a of 21

ATTACHMENT 3

Division/Location CBK SEAD
Job No. 519200
Customer USACE
Address
Location of Job SEAD
Identity of PRCS Dryer
Describe Hazards of PRCS (Chemical, Physical)

Chemical Introduced Into Space PAHs DEC

Purpose This Permit Authorized Clean out

CHECKLIST	YES	DOES NOT APPLY
All lines leading to and from confined space have been blinded or disconnected	T.M	
Electrical service disconnected or locked out	T.M	
All grounding and bonding cables in place	T.M	
All lighting, fittings, power equipment, and extension cords are explosion-proof		T.M
Ground Fault Circuit Indicator (GFCI) checked and functioning	T.M	
All ignition sources have been isolate	T.M	
All respiratory equipment and alarms checked and functional	T.M	
All safety harnesses and life lines checked	T.M	
All required PPE checked and in use	T.M	
All entrants are confined space trained	T.M	
All entrants are trained in the use, care, and limitations of respirators and PPE	T.M	
Attendant trained in emergency procedures	T.M	
Attendant(s) trained in rescue procedures	T.M	
Outside rescue service will be used and they have been notified of this entry	T.M	
Appropriate rescue equipment available and checked	T.M	
Ventilation system in use and effective	T.M	
Entrant(s) can achieve a gas-tight seal with respirator	T.M	
Entrant(s) are not wearing contact lenses	T.M	
All tests have been completed and indicate that entrance requirements have been met	T.M	
Appropriate warning signs have been posted and unauthorized personnel have been excluded from the PRCS and area	T.M	

IF THE ANSWER TO ANY OF THE ABOVE QUESTIONS IS NO, ENTRY IS NOT PERMITTED.

PERSONAL PROTECTIVE EQUIPMENT (Circle)

EYE/FACE
Chemical Goggles
Face Shield
Safety Glasses

EXTREMITIES
Hard Hat —
Gloves (Material Nitrile)
Hands
Boots (Material Neoprene)
Booties

BODY
Suit (Level C, Material Poly)

RESPIRATORY
SCBA
Air Line
Egress System
Air Purifying (Cartridge Mono)
Powered Air Purifying (Cartridge)

OTHER
Hearing Protection
Harness & Lifeline
Chest or Parachute

RESCUE EQUIPMENT
Mechanical Extraction Device
First Aid Kit
SCBA
Other (Specify)

NON-IT RESCUE TEAM
Instructions to Summon Rescue
Base 117

COMMUNICATION
Lifeline "Tug" Signals (See HASP)
Air Powered Horn Signals (See HASP)
Other Radio

OTHER PERMITS ISSUED FOR WORK IN PRCS:

OTHER HAZARD CONTROL PROCEDURES OR INSTRUCTIONS:

2-21

INTERNATIONAL TECHNOLOGY CORPORATION

TEST DATA
Oxygen, Flammability and Toxic Contaminant(s)

Page __ of __ Procedure No. HS300
Revision No. 0
Date 03/01/93
Page 21b of 21

Time	Percent Oxygen	Percent LEL	PEG	PEG	PEG	PEG	PEG	Initials	Comments
30	21	0							

AUTHORIZED ENTRANTS
Wayne Rankerson
Harry Carr

AUTHORIZED ATTENDANTS
Harry Carr
Wayne Rankerson

RESCUE PERSONNEL
Harry Carr
BASE FIRE DEPT #117

Diagram the confined space. Indicate location of manways and ventilators. Indicate location(s) where tests conducted.

)(- Manway
= - Ventilator
X - Test Location

ACCEPTABLE ENTRY CONDITIONS

1) Entry Permit Completely Filled Out
2) Oxygen between 20-23.5%
3) Combustible Gases Below 10% LEL
4) Permissible Levels of Toxic Gases (List)
5) Other

PRCS SAFE FOR ENTRY
DATE/TIME 830 / 2-27-95 NAME ENTRY SUPERVISOR Tim Meade SIGNATURE Tim Meade
CURRENT ENTRY SUPERVISOR (IF DIFFERENT)
ENTRY PERMIT EXPIRES DATE/TIME 2030 / 2-27-95 (No longer than 1 shift)

ENTRY PERMIT CANCELLED
DATE/TIME 2-27-95, 1730 SIGNATURE Tim Meade
REASON (✓) ____ Work Complete ____ Authorized Conditions not met ____ Incident
End of shift

DESCRIBE PROBLEMS DURING ENTRY AND RESOLUTION

RECLASSIFICATION TO NON-PERMIT-REQUIRED CONFINED SPACE
Describe hazard removal methods, without use of ventilation.

TING VERIFICATION SHOWN AT TIME ____ ON TEST DATA CHART ABOVE.
DATE/TIME ____ / ____ ENTRY SUPERVISOR SIGNATURE

REVIEWED BY [illegible] DATE 2/28/95

2-32

ATTACHMENT 5

LOCKOUT/TAGOUT FOR COMPRESSED AIR AND GASES

Job: SEAD 2/28/95

Device: LP Lines

Location: LTD unit

Authorized Person: [illegible]

PREPARATION FOR SHUTDOWN

1. Determine types and shutoff location
2. Determine if there is more than one energy source
3. Determine magnitude of compressed air, gas, steam, water, or fluids.
4. Notify affected employees in the area that equipment will be locked out for maintenance.
5. Shutoff main supply to machine.

LOCKOUT/TAGOUT

6. Lock and tag main supply in the OFF position.
7. Bleed line and verify that no air or gases remain in the equipment.
8. Repair equipment.

RETURN TO SERVICE

9. Be sure all connections are made and any unused tools and equipment are removed.
10. Remove lock if necessary to verify proper operation.
12. Remove tag.
13. Notify employees in the area that the equipment is available.

Authorized Person: [illegible]

Site Supervisor: [illegible]

IT Corporation is a wholly owned subsidiary of International Technology Corporation

ATTACHMENT 4

LOCKOUT/TAGOUT FOR ELECTRICAL EQUIPMENT

Job: SEAD 2/28/95

Device: slinger Belt, Dryer, LP Pump

Location: LTD unit

Authorized Person: Wayne Rauberson

PREPARATION FOR SHUTDOWN

1. Determine power type and shutoff location
2. Determine if there is more than one energy source
3. Determine magnitude of power (voltage)
4. Notify affected employees in the area that equipment will be under lockout for maintenance.
5. Shutoff power sources to machine.

LOCKOUT/TAGOUT

6. Lock and tag main power switches in the OFF position, remove fuses.
7. Verify that no power is available to the equipment using a voltmeter, if necessary.
8. Drain devices such as capacitor banks.
9. Verify that these devices have no stored energy by use of the voltmeter.
10. Repair equipment.

RETURN TO SERVICE

11. Be sure all connections are made and any unused tools and equipment are removed.
12. Remove lock if necessary to verify machine is repaired. The maintenance employee, while verifying the machine is repaired cannot leave the immediate area.
13. Remove tag from machine.
14. Notify employees in the area that the equipment is available.

Authorized Person:

Site Supervisor: Tim Neff

IT Corporation is a wholly owned subsidiary of International Technology Corporation

CORPORATION

HOT WORK PERMIT

Operating Area LTD unit Good for this date only 2-28 1995

Specific vessel or equipment Dryer

Work to be done weld Dam & flights

TESTS

STATE EXACT LOCATION OF TEST	TIME	PERCENT LOWER EXPLOSION LIMIT	PERCENT OXYGEN	OTHERS		INITIA
in & around Dryer	815	0	21			

CHECK LIST

	Initial: Yes	Initial: Does Not Apply
Operations/plant personnel have been informed of work to be performed	T.M	
All tanks/lines/valves are disconnected, blinded, or locked out.	T.M	
uipment and all attached piping has been cleaned and purged with: eck blank) Water ____ Steam ____ Inert gas ____ Air ____		T.M
Electrical service has been locked out and tagged.	T.M	
All grounding/bonding wire in place.	T.M	
Surrounding equipment and operations are safe for hot work.	T.M	
No open vessels or lines within 35 feet of hot work area.	T.M	
No combustible items within 35 feet of hot work area or covered with wetted tarpaulins.	T.M	
Fire Watch has been provided by Contractor.	T.M	
No flammable gases greater than 10% LEL in hot work area.	T.M	
All requirements of ITCPRO 9531 for Confined Space Entry have been met and ITC Form 9531-1 has been completed and posted.	T.M	
If vessel contains leaded product, all requirements of ITCPRO 9531.3 have been met.		

PERSONNEL PROTECTIVE EQUIPMENT

EYES
- ☐ Chemical Goggles
- ☐ Face Shield
- ☐ Safety Glasses
- ☑ Welders Mask

BODY
- ☐ Environmental Suit: ☐ PVC ☐ Bur
- ☐ Heavy Suit: ☐ PVC ☐ Neoprene
- ☐ Light PVC Suit
- ☑ Yellow Tyvek Suit
- ☐ White Tyvek Suit

EXTREMITIES
- ☑ Hard Hat
- ☑ Gloves
- ☑ Boots ☐ PVC ☑ Neoprene
- ☐ Hoods ☐ PVC ☐ Neoprene
- ☐ Foot Coverings, Disposable

RESPIRATORY
- ☐ Self-Contained Respirator
- ☐ Hose Line Respirator
- ☐ Hose Line W/Egress
- ☑ Cartridge Respirator

Cartridge Type organic
- ☐ Dust Respirator

EQUIPMENT REQUIRED
- ☑ Fire Extinguisher
- ☐ Fire Blanket
- ☐ Charged Water Hose
- ☐ Combustible Gas Indicator

Special Instructions: ____

C ted by: Kim Meade (Name Printed) Kim Meade (Signature) 2-28-95 (Date)

Manager

ITC FORM 9571-1
CS/103-5-85

195-

INTERNATIONAL TECHNOLOGY CORPORATION

ENTRY PERMIT
PERMIT-REQUIRED CONFINED SPACE (PRCS)

Page __ of __

Procedure No. HS300
Revision No. 0
Date 03/01/93
Page 21a of 21

ATTACHMENT 3

Division/Location C&R
Job No. 529200
Customer USACE
Address
Location of Job SEAD
Identity of PRCS Dryer - CAP Unit
Describe Hazards of PRCS (Chemical, Physical)

Chemical Introduced Into Space PAH'S DEC

Purpose This Permit Authorized replace Bolts in Tire 3 flights weld Dam

CHECKLIST	YES	DOES NOT APPLY
All lines leading to and from confined space have been blinded or disconnected	T.M	
Electrical service disconnected or locked out	T.M	
All grounding and bonding cables in place	T.M	
All lighting, fittings, power equipment, and extension cords are explosion-proof		T.M
Ground Fault Circuit Indicator (GFCI) checked and functioning	T.M	
All ignition sources have been isolate	T.M	
All respiratory equipment and alarms checked and functional	T.M	
All safety harnesses and life lines checked	T.M	
All required PPE checked and in use	T.M	
All entrants are confined space trained	T.M	
All entrants are trained in the use, care, and limitations of respirators and PPE	T.M	
Attendant trained in emergency procedures	T.M	
Attendant(s) trained in rescue procedures	T.M	
Outside rescue service will be used and they have been notified of this entry	T.M	
Appropriate rescue equipment available and checked	T.M	
Ventilation system in use and effective	T.M	
Entrant(s) can achieve a gas-tight seal with respirator	T.M	
Entrant(s) are not wearing contact lenses	T.M	
All tests have been completed and indicate that entrance requirements have been met	T.M	
Appropriate warning signs have been posted and unauthorized personnel have been excluded from the PRCS and area	T.M	

IF THE ANSWER TO ANY OF THE ABOVE QUESTIONS IS NO, ENTRY IS NOT PERMITTED.

PERSONAL PROTECTIVE EQUIPMENT (Circle)

EYE/FACE
Chemical Goggles
Face Shield
Safety Glasses

EXTREMITIES
Hard Hat
Gloves (Material Nitrile)
Hands
Boots (Material Neoprene)
Booties

BODY
Suit (Level C, Material Poly)

RESPIRATORY
SCBA
Air Line
Egress System
Air Purifying (Cartridge Organic)
Powered Air Purifying (Cartridge)

OTHER
Hearing Protection ✓
Harness & Lifeline
Chest or Parachute

RESCUE EQUIPMENT
Mechanical Extraction Device
First Aid Kit ✓
SCBA
Other (Specify)

NON-IT RESCUE TEAM
Instructions to Summon Rescue
Base 117

COMMUNICATION
Lifeline "Tug" Signals (See HASP)
Air Powered Horn Signals (See HASP)
Other Radio

OTHER PERMITS ISSUED FOR WORK IN PRCS: Hot work

OTHER HAZARD CONTROL PROCEDURES OR INSTRUCTIONS:

2-2

INTERNATIONAL TECHNOLOGY CORPORATION

TEST DATA
Oxygen, Flammability and Toxic Contaminant(s)

Page __ of __ Procedure No. HS300
Revision No. 0
Date 03/01/93
Page 21b of 21

Time	Percent Oxygen	Percent LEL	PEG	PEG	PEG	PEG	PEG	Initials	Comments
15	21.9	0							

AUTHORIZED ENTRANTS

Wayne Raulerson
Bill Williams
Smylie Stam
Big Sherman
Art Crutchfield
Tim Meade

AUTHORIZED ATTENDANTS

Bill Williams
Wayne Raulerson

RESCUE PERSONNEL

BASE FIRE Dept #117

Diagram the confined space, indicate location of manways and ventilators. Indicate location(s) where tests conducted.

) (- Manway
∞ - Ventilator
X - Test Location

ACCEPTABLE ENTRY CONDITIONS

1) Entry Permit Completely Filled Out
2) Oxygen between 20-23.5%
3) Combustible Gases Below 10% LEL
4) Permissible Levels of Toxic Gases (List)

5) Other

PRCS SAFE FOR ENTRY

DATE/TIME 0830 / 2-28-95 NAME ENTRY SUPERVISOR ~~Bill Williams~~ Wayne Raulersons SIGNATURE

CURRENT ENTRY SUPERVISOR (IF DIFFERENT)

ENTRY PERMIT EXPIRES DATE/TIME 2030 / 2-28 (No longer than 1 shift)

ENTRY PERMIT CANCELLED

DATE/TIME ___/___ SIGNATURE

REASON (✓) ___ Work Complete ___ Authorized Conditions not met ___ Incident

DESCRIBE PROBLEMS DURING ENTRY AND RESOLUTION

RECLASSIFICATION TO NON-PERMIT-REQUIRED CONFINED SPACE
Describe hazard removal methods, without use of ventilation.

TESTING VERIFICATION SHOWN AT TIME ___ ON TEST DATA CHART ABOVE.

DATE/TIME ___/___ ENTRY SUPERVISOR SIGNATURE

REVIEWED BY Bill Ad DATE 3/1/95

2-32

Operating Area LTTA Good for this date only 3/1 1995

Specific vessel or equipment Drive LTTA

Work to be done Cut Flights

TESTS

STATE EXACT LOCATION OF TEST	TIME	PERCENT LOWER EXPLOSION LIMIT	PERCENT OXYGEN	OTHERS		INITIA
Drive		~~20~~	21			NL

CHECK LIST

	Initial: Yes	Initial: Does Not Apply
Operations/plant personnel have been informed of work to be performed	—	
All tanks/lines/valves are disconnected, blinded, or locked out.	—	
uipment and all attached piping has been cleaned and purged with: eck blank) Water____ Steam____ Inert gas____ Air		—
Electrical service has been locked out and tagged.	—	
All grounding/bonding wire in place.	—	
Surrounding equipment and operations are safe for hot work.	—	
No open vessels or lines within 35 feet of hot work area.	—	
No combustible items within 35 feet of hot work area or covered with wetted tarpaulins.	—	
Fire Watch has been provided by Contractor.	—	
No flammable gases greater than 10% LEL in hot work area.	—	
All requirements of ITCPRO 9531 for Confined Space Entry have been met and ITC Form 9531-1 has been completed and posted.		
If vessel contains leaded product, all requirements of ITCPRO 9531.3 have been met.		

PERSONNEL PROTECTIVE EQUIPMEN

EYES
- ☐ Chemical Goggles
- ☐ Face Shield
- ☐ Safety Glasses
- ☐ Welders Mask

BODY
- ☐ Environmental Suit: ☐ PVC ☐ Bu
- ☐ Heavy Suit: ☐ PVC ☐ Neoprene
- ☐ Light PVC Suit
- ☑ Yellow Tyvek Suit
- ☐ White Tyvek Suit

EXTREMITIES
- ☑ Hard Hat
- ☑ Gloves
- ☑ Boots ☐ PVC ☑ Neoprene
- ☐ Hoods ☐ PVC ☐ Neoprene
- ☑ Foot Coverings, Disposable

RESPIRATORY
- ☐ Self-Contained Respirator
- ☐ Hose Line Respirator
- ☐ Hose Line W/Egress
- ☑ Cartridge Respirator

Cartridge Type Organic
- ☐ Dust Respirator

EQUIPMENT REQUIRED
- ☑ Fire Extinguisher
- ☐ Fire Blanket
- ☐ Charged Water Hose
- ☑ Combustible Gas Indicator

Special Instructions:

C[illegible]eted by: Wayne Rawlinson [signature] 3/1/95

Name Printed Signature Date

Manager

ITC FORM 9571-1
CS/103-5-85

ATTACHMENT 4

LOCKOUT/TAGOUT FOR ELECTRICAL EQUIPMENT

Job: SEAD 3/1/95

Device: Drier Sluice

Location: [illegible]

Authorized Person: [illegible]

PREPARATION FOR SHUTDOWN

1. Determine power type and shutoff location
2. Determine if there is more than one energy source
3. Determine magnitude of power (voltage)
4. Notify affected employees in the area that equipment will be under lockout for maintenance.
5. Shutoff power sources to machine.

LOCKOUT/TAGOUT

6. Lock and tag main power switches in the OFF position, remove fuses.
7. Verify that no power is available to the equipment using a voltmeter, if necessary.
8. Drain devices such as capacitor banks.
9. Verify that these devices have no stored energy by use of the voltmeter.
10. Repair equipment.

RETURN TO SERVICE

11. Be sure all connections are made and any unused tools and equipment are removed.
12. Remove lock if necessary to verify machine is repaired. The maintenance employee, while verifying the machine is repaired cannot leave the immediate area.
13. Remove tag from machine.
14. Notify employees in the area that the equipment is available.

Authorized Person:

Site Supervisor:

IT Corporation is a wholly owned subsidiary of International Technology Corporation

ATTACHMENT 5

LOCKOUT/TAGOUT FOR COMPRESSED AIR AND GASES

Job: SEAC 3/1/95

Device: Dryer

Location: [illegible]

Authorized Person: [illegible]

PREPARATION FOR SHUTDOWN

1. Determine types and shutoff location
2. Determine if there is more than one energy source
3. Determine magnitude of compressed air, gas, steam, water, or fluids.
4. Notify affected employees in the area that equipment will be locked out for maintenance.
5. Shutoff main supply to machine.

LOCKOUT/TAGOUT

6. Lock and tag main supply in the OFF position.
7. Bleed line and verify that no air or gases remain in the equipment.
8. Repair equipment.

RETURN TO SERVICE

9. Be sure all connections are made and any unused tools and equipment are removed.
10. Remove lock if necessary to verify proper operation.
12. Remove tag.
13. Notify employees in the area that the equipment is available.

Authorized Person:

Site Supervisor:

IT Corporation is a wholly owned subsidiary of International Technology Corporation

INTERNATIONAL TECHNOLOGY CORPORATION

ENTRY PERMIT
PERMIT-REQUIRED CONFINED SPACE (PRCS)

Page __ of __

Procedure No. HS300
Revision No. 0
Date 03/01/93
Page 21a of 21

ATTACHMENT 3

Division/Location C & R
Job No. 519200
Customer USACE
Address
Location of Job
Identity of PRCS
Describe Hazards of PRCS (Chemical, Physical)
Chemical Introduced Into Space
Purpose This Permit Authorized

CHECKLIST	YES	DOES NOT APPLY
All lines leading to and from confined space have been blinded or disconnected	✓	
Electrical service disconnected or locked out	✓	
All grounding and bonding cables in place	✓	
All lighting, fittings, power equipment, and extension cords are explosion-proof	✓	
Ground Fault Circuit Indicator (GFCI) checked and functioning	✓	
All ignition sources have been isolate	✓	
All respiratory equipment and alarms checked and functional		✓
All safety harnesses and life lines checked		✓
All required PPE checked and in use	✓	
All entrants are confined space trained	✓	
All entrants are trained in the use, care, and limitations of respirators and PPE	✓	
Attendant trained in emergency procedures	✓	
Attendant(s) trained in rescue procedures	✓	
Outside rescue service will be used and they have been notified of this entry	✓	
Appropriate rescue equipment available and checked	✓	
Ventilation system in use and effective	✓	
Entrant(s) can achieve a gas-tight seal with respirator	✓	
Entrant(s) are not wearing contact lenses	✓	
All tests have been completed and indicate that entrance requirements have been met	✓	
Appropriate warning signs have been posted and unauthorized personnel have been excluded from the PRCS and area	✓	

PERSONAL PROTECTIVE EQUIPMENT (Circle)

EYE/FACE
Chemical Goggles
Face Shield
Safety Glasses

EXTREMITIES
Hard Hat
Gloves (Material Nitrile)
Hoods
Boots (Material Neoprene)
Booties

BODY
Suit (Level 3, Material Tyvek)

RESPIRATORY
SCBA
Air Line
Egress System
Air Purifying (Cartridge on cover)
Powered Air Purifying (Cartridge)

OTHER
Hearing Protection
Harness & Lifeline
Chest or Parachute

RESCUE EQUIPMENT
Mechanical Extraction Device
First Aid Kit
SCBA
Other (Specify)

NON-IT RESCUE TEAM
Instructions to Summon Rescue
BASE FIRE DEPT # 117

COMMUNICATION
Lifeline "Tug" Signals (See HASP)
Air Powered Horn Signals (See HASP)
Other Radio

IF THE ANSWER TO ANY OF THE ABOVE QUESTIONS IS NO, ENTRY IS NOT PERMITTED.

OTHER PERMITS ISSUED FOR WORK IN PRCS:

OTHER HAZARD CONTROL PROCEDURES OR INSTRUCTIONS:

2-

INTERNATIONAL TECHNOLOGY CORPORATION

TEST DATA
Oxygen, Flammability and Toxic Contaminant(s)

Page __ of __ Procedure No. HS300
Revision No. 0
Date 03/01/93
Page 21b of 21

Time	Percent Oxygen	Percent LEL	___ PEL	___ PEL	___ PEL	___ PEL	___ PEL	Initials	Comments
1230	21.0	0							

AUTHORIZED ENTRANTS
Art Crutchfield
Bill Williams

AUTHORIZED ATTENDANTS
[illegible]

RESCUE PERSONNEL
BASE FIRE DEPT.

Diagram the confined space, indicate location of manways and ventilators. Indicate location(s) where tests conducted.

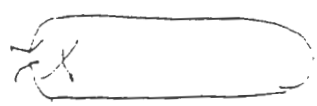

( ) - Manway
= - Ventilator
X - Test Location

ACCEPTABLE ENTRY CONDITIONS

1) Entry Permit Completely Filled Out
2) Oxygen between 20-23.5%
3) Combustible Gases Below 10% LEL
4) Permissible Levels of Toxic Gases (List)
5) Other

PRCS SAFE FOR ENTRY

DATE/TIME 3/1 95/1230 NAME ENTRY SUPERVISOR Art Crutchfield SIGNATURE

CURRENT ENTRY SUPERVISOR (IF DIFFERENT) [illegible]

ENTRY PERMIT EXPIRES DATE/TIME 3/1/95 1930 (No longer than 1 shift)

ENTRY PERMIT CANCELLED

DATE/TIME ___/___ SIGNATURE

REASON (✓) ___ Work Complete ___ Authorized Conditions not met ___ Incident

DESCRIBE PROBLEMS DURING ENTRY AND RESOLUTION

RECLASSIFICATION TO NON-PERMIT-REQUIRED CONFINED SPACE
Describe hazard removal methods, without use of ventilation.

TESTING VERIFICATION SHOWN AT TIME ___ ON TEST DATA CHART ABOVE.

DATE/TIME ___/___ ENTRY SUPERVISOR SIGNATURE

REVIEWED BY [illegible] DATE 3/2/95

2-32

ATTACHMENT 4

LOCKOUT/TAGOUT FOR ELECTRICAL EQUIPMENT

Job: SEAD LTTD 519200

Device: Hammer Mill Note: For Undercrusher Belt Replacement

Location: LTTD

Authorized Person: Hopkins

PREPARATION FOR SHUTDOWN

1. Determine power type and shutoff location
2. Determine if there is more than one energy source
3. Determine magnitude of power (voltage)
4. Notify affected employees in the area that equipment will be under lockout for maintenance.
5. Shutoff power sources to machine.

LOCKOUT/TAGOUT

6. Lock and tag main power switches in the OFF position, remove fuses.
7. Verify that no power is available to the equipment using a voltmeter, if necessary.
8. Drain devices such as capacitor banks.
9. Verify that these devices have no stored energy by use of the voltmeter.
10. Repair equipment.

RETURN TO SERVICE

11. Be sure all connections are made and any unused tools and equipment are removed.
12. Remove lock if necessary to verify machine is repaired. The maintenance employee, while verifying the machine is repaired cannot leave the immediate area.
13. Remove tag from machine.
14. Notify employees in the area that the equipment is available.

Authorized Person: [signature]

Site Supervisor: [signature]

IT Corporation is a wholly owned subsidiary of International Technology Corporation

ATTACHMENT 4

LOCKOUT/TAGOUT FOR ELECTRICAL EQUIPMENT

Job: SEAD

Device: Undercrusher

Location: Thermal plant

Authorized Person: Bill Williams

PREPARATION FOR SHUTDOWN

1. Determine power type and shutoff location
2. Determine if there is more than one energy source
3. Determine magnitude of power (voltage)
4. Notify affected employees in the area that equipment will be under lockout for maintenance.
5. Shutoff power sources to machine.

LOCKOUT/TAGOUT

6. Lock and tag main power switches in the OFF position, remove fuses.
7. Verify that no power is available to the equipment using a voltmeter, if necessary.
8. Drain devices such as capacitor banks.
9. Verify that these devices have no stored energy by use of the voltmeter.
10. Repair equipment.

RETURN TO SERVICE

11. Be sure all connections are made and any unused tools and equipment are removed.
12. Remove lock if necessary to verify machine is repaired. The maintenance employee, while verifying the machine is repaired cannot leave the immediate area.
13. Remove tag from machine.
14. Notify employees in the area that the equipment is available.

Authorized Person:

Site Supervisor:

IT Corporation is a wholly owned subsidiary of International Technology Corporation

ATTACHMENT 4

LOCKOUT/TAGOUT FOR ELECTRICAL EQUIPMENT

Job: SEAD LHD unit

Device: High lift

Location: LHD unit

Authorized Person: Art Crutchfield

PREPARATION FOR SHUTDOWN

1. Determine power type and shutoff location
2. Determine if there is more than one energy source
3. Determine magnitude of power (voltage)
4. Notify affected employees in the area that equipment will be under lockout for maintenance.
5. Shutoff power sources to machine.

LOCKOUT/TAGOUT

6. Lock and tag main power switches in the OFF position, remove fuses.
7. Verify that no power is available to the equipment using a voltmeter, if necessary.
8. Drain devices such as capacitor banks.
9. Verify that these devices have no stored energy by use of the voltmeter.
10. Repair equipment.

RETURN TO SERVICE

11. Be sure all connections are made and any unused tools and equipment are removed.
12. Remove lock if necessary to verify machine is repaired. The maintenance employee, while verifying the machine is repaired cannot leave the immediate area.
13. Remove tag from machine.
14. Notify employees in the area that the equipment is available.

Authorized Person:

Site Supervisor: [signature]

15-539-5011

IT Corporation is a wholly owned subsidiary of International Technology Corporation

CORPORATION

Operating Area LTD unit Good for this date only 3-2 19 95

ecific vessel or equipment Baghouse

Work to be done cut Bolts

TESTS

STATE EXACT LOCATION OF TEST	TIME	PERCENT LOWER EXPLOSION LIMIT	PERCENT OXYGEN	OTHERS		INITIA
Around Bag house	1000	0	21.4			T.M

CHECK LIST	Initial: Yes	Initial: Does Not Apply
Operations/plant personnel have been informed of work to be performed	T.M	
All tanks/lines/valves are disconnected, blinded, or locked out.		T.M
pment and all attached piping has been cleaned and purged with: ck blank) Water ____ Steam ____ Inert gas ____ Air ____		T.M
Electrical service has been locked out and tagged.	T.M	
All grounding/bonding wire in place.	T.M	
Surrounding equipment and operations are safe for hot work.	T.M	
No open vessels or lines within 35 feet of hot work area.	T.M	
No combustible items within 35 feet of hot work area or covered with wetted tarpaulins.	T.M	
Fire Watch has been provided by Contractor.		T.M
No flammable gases greater than 10% LEL in hot work area.	T.M	
All requirements of ITCPRO 9531 for Confined Space Entry have been met and ITC Form 9531-1 has been completed and posted.		T.M
If vessel contains leaded product, all requirements of ITCPRO 9531.3 have been met.		

PERSONNEL PROTECTIVE EQUIPMENT

EYES
- ☐ Chemical Goggles
- ☐ Face Shield
- ☐ Safety Glasses
- ☐ Welders Mask

BODY
- ☐ Environmental Suit: ☐ PVC ☐ Bur
- ☐ Heavy Suit: ☐ PVC ☐ Neoprene
- ☐ Light PVC Suit
- ☑ Yellow Tyvek Suit
- ☐ White Tyvek Suit

EXTREMITIES
- ☑ Hard Hat
- ☑ Gloves
- ☐ Boots ☐ PVC ☑ Neoprene
- ☐ Hoods ☐ PVC ☐ Neoprene
- ☐ Foot Coverings, Disposable

RESPIRATORY
- ☑ Self-Contained Respirator
- ☐ Hose Line Respirator
- ☐ Hose Line W/Egress
- ☑ Cartridge Respirator

Cartridge Type Figaro

- ☐ Dust Respirator

EQUIPMENT REQUIRED
- ☑ Fire Extinguisher
- ☐ Fire Blanket
- ☐ Charged Water Hose
- ☐ Combustible Gas Indicator

Special Instructions:

Co ed by: T. Meade (Name Printed) Tim Meade (Signature) 3-2-95 (Date)

Manager

ITC FORM 9571-1
CS/103-5-85

3/5/1995

INTERNATIONAL TECHNOLOGY CORPORATION

ENTRY PERMIT
PERMIT-REQUIRED CONFINED SPACE (PRCS)

Procedure No. HS300
Revision No. 0
Date 03/01/93
Page 21a of 21

ATTACHMENT 3

Division/Location C & R Bldg
Job No. 519600
Customer USAFE
Address
Location of Job SEAD
Identify of PRCS Dryer
Describe Hazards of PRCS (Chemical, Physical)

Chemical Introduced Into Space PAH'S DFS

Purpose This Permit Authorized Clean Discharge Shot of Dryer

CHECKLIST	YES	DOES NOT APPLY
All lines leading to and from confined space have been blinded or disconnected	T.M	
Electrical service disconnected or locked out	T.M	
All grounding and bonding cables in place	T.M	
All lighting, fittings, power equipment, and extension cords are explosion-proof		T.M
Ground Fault Circuit Indicator (GFCI) checked and functioning	T.M	
All ignition sources have been isolate	T.M	
All respiratory equipment and alarms checked and functional	T.M	
All safety harnesses and life lines checked		T.M
All required PPE checked and in use	T.M	
All entrants are confined space trained	T.M	
All entrants are trained in the use, care, and limitations of respirators and PPE	T.M	
Attendant trained in emergency procedures	T.M	
Attendant(s) trained in rescue procedures	T.M	
Outside rescue service will be used and they have been notified of this entry	T.M	
Appropriate rescue equipment available and checked	T.M	
Ventilation system in use and effective	T.M	
Entrant(s) can achieve a gas-tight seal with respirator	T.M	
Entrant(s) are not wearing contact lenses	T.M	
All tests have been completed and indicate that entrance requirements have been met	T.M	
Appropriate warning signs have been posted and unauthorized personnel have been excluded from the PRCS and area	T.M	

IF THE ANSWER TO ANY OF THE ABOVE QUESTIONS IS NO, ENTRY IS NOT PERMITTED.

PERSONAL PROTECTIVE EQUIPMENT (Circle)

EYE/FACE
Chemical Goggles
Face Shield
Safety Glasses

EXTREMITIES
Hard Hat ✓
Gloves (Material Nitrile)
Hoods
Boots (Material Neoprene)
Booties

BODY
Suit (Level C, Material Poly)

RESPIRATORY
SCBA
Air Line
Egress System
Air Purifying (Cartridge Organic)
Powered Air Purifying (Cartridge)

OTHER
Hearing Protection ✓
Harness & Lifeline
Chest or Parachute

RESCUE EQUIPMENT
Mechanical Extraction Device
First Aid Kit ✓
SCBA
Other (Specify)

NON-IT RESCUE TEAM
Instructions to Summon Rescue
Base 911

COMMUNICATION
Lifeline "Tug" Signals (See HASP)
Air Powered Horn Signals (See HASP)
Other Radio

OTHER PERMITS ISSUED FOR WORK IN PRCS:

OTHER HAZARD CONTROL PROCEDURES OR INSTRUCTIONS:

2-0

INTERNATIONAL TECHNOLOGY CORPORATION

TEST DATA
Oxygen, Flammability and Toxic Contaminants

Procedure No. HS300
Revision No. 0
Date 03/01/93
Page 21b of 21

Time	Percent Oxygen	Percent LEL	PEG	PEG	PEG	PEG	PEG	Initials	Comments
1215	21.4	0							

AUTHORIZED ENTRANTS

ART
Bill
Smylie

AUTHORIZED ATTENDANTS

ART
Bill

RESCUE PERSONNEL

ART

Diagram the confined space, indicate location of manways and ventilators. Indicate location(s) where tests conducted.

) (- Manway
= - Ventilator
X - Test Location

ACCEPTABLE ENTRY CONDITIONS

1) Entry Permit Completely Filled Out
2) Oxygen between 20-23.5%
3) Combustible Gases Below 10% LEL
4) Permissible Levels of Toxic Gases (List)
5) Other

PRCS SAFE FOR ENTRY

DATE/TIME 1220 / 3-5-95 NAME ENTRY SUPERVISOR Tim Meade SIGNATURE Tim Meade

CURRENT ENTRY SUPERVISOR (IF DIFFERENT)

ENTRY PERMIT EXPIRES DATE/TIME 2420 / 3-5-95 (No longer than 1 shift)

ENTRY PERMIT CANCELLED

DATE/TIME / SIGNATURE

REASON (✓) Work Complete Authorized Conditions not met Incident

DESCRIBE PROBLEMS DURING ENTRY AND RESOLUTION

RECLASSIFICATION TO NON-PERMIT-REQUIRED CONFINED SPACE
Describe hazard removal methods, without use of ventilation.

TESTING VERIFICATION SHOWN AT TIME 1215 ON TEST DATA CHART ABOVE.

DATE/TIME / ENTRY SUPERVISOR SIGNATURE Tim Meade

REVIEWED BY DATE

2-32

ATTACHMENT 4

LOCKOUT/TAGOUT FOR ELECTRICAL EQUIPMENT

Job: 3EHD LTTD 519200

Device: Undercrusher Note: For Undercrusher Belt Replacement.

Location: LTTD

Authorized Person: [signature]

PREPARATION FOR SHUTDOWN

1. Determine power type and shutoff location
2. Determine if there is more than one energy source
3. Determine magnitude of power (voltage)
4. Notify affected employees in the area that equipment will be under lockout for maintenance.
5. Shutoff power sources to machine.

LOCKOUT/TAGOUT

6. Lock and tag main power switches in the OFF position, remove fuses.
7. Verify that no power is available to the equipment using a voltmeter, if necessary.
8. Drain devices such as capacitor banks.
9. Verify that these devices have no stored energy by use of the voltmeter.
10. Repair equipment.

RETURN TO SERVICE

11. Be sure all connections are made and any unused tools and equipment are removed.
12. Remove lock if necessary to verify machine is repaired. The maintenance employee, while verifying the machine is repaired cannot leave the immediate area.
13. Remove tag from machine.
14. Notify employees in the area that the equipment is available.

Authorized Person: [signature]

Site Supervisor: [signature]

2-78

ATTACHMENT 4

LOCKOUT/TAGOUT FOR ELECTRICAL EQUIPMENT

Job: SEAD

Device: Dryer & Slinger Belt

Location: L&D unit

Authorized Person: Art Crouchfield

PREPARATION FOR SHUTDOWN

1. Determine power type and shutoff location
2. Determine if there is more than one energy source
3. Determine magnitude of power (voltage)
4. Notify affected employees in the area that equipment will be under lockout for maintenance.
5. Shutoff power sources to machine.

LOCKOUT/TAGOUT

6. Lock and tag main power switches in the OFF position, remove fuses.
7. Verify that no power is available to the equipment using a voltmeter, if necessary.
8. Drain devices such as capacitor banks.
9. Verify that these devices have no stored energy by use of the voltmeter.
10. Repair equipment.

RETURN TO SERVICE

11. Be sure all connections are made and any unused tools and equipment are removed.
12. Remove lock if necessary to verify machine is repaired. The maintenance employee, while verifying the machine is repaired cannot leave the immediate area.
13. Remove tag from machine.
14. Notify employees in the area that the equipment is available.

Authorized Person:

Site Supervisor:

2-78

ATTACHMENT 4

LOCKOUT/TAGOUT FOR ELECTRICAL EQUIPMENT

Job: 519600 - SERA

Device: Screen

Location: LTR

Authorized Person: Teri O'Brian

PREPARATION FOR SHUTDOWN

1. Determine power type and shutoff location
2. Determine if there is more than one energy source
3. Determine magnitude of power (voltage)
4. Notify affected employees in the area that equipment will be under lockout for maintenance.
5. Shutoff power sources to machine.

LOCKOUT/TAGOUT

6. Lock and tag main power switches in the OFF position, remove fuses.
7. Verify that no power is available to the equipment using a voltmeter, if necessary.
8. Drain devices such as capacitor banks.
9. Verify that these devices have no stored energy by use of the voltmeter.
10. Repair equipment.

RETURN TO SERVICE

11. Be sure all connections are made and any unused tools and equipment are removed.
12. Remove lock if necessary to verify machine is repaired. The maintenance employee, while verifying the machine is repaired cannot leave the immediate area.
13. Remove tag from machine.
14. Notify employees in the area that the equipment is available.

Authorized Person: Teri O'Brian

Site Supervisor:

IT Corporation is a wholly owned subsidiary of International Technology Corporation

CORPORATION

Operating Area _____ Good for this date only March 6 1995

ecific vessel or equipment Screen + Auit Screw

Work to be done weld on screen cut bearing off shaft

TESTS

STATE EXACT LOCATION OF TEST	TIME	PERCENT LOWER EXPLOSION LIMIT	PERCENT OXYGEN	OTHERS _____	OTHERS _____	INITIA

CHECK LIST

	Initial: Yes	Initial: Does Not Apply
Operations/plant personnel have been informed of work to be performed	✓	
All tanks/lines/valves are disconnected, blinded, or locked out.		✓
ipment and all attached piping has been cleaned and purged with: ck blank) Water _____ Steam _____ Inert gas _____ Air		✓
Electrical service has been locked out and tagged.	✓	
All grounding/bonding wire in place.	✓	
Surrounding equipment and operations are safe for hot work.	✓	
No open vessels or lines within 35 feet of hot work area.	✓	
No combustible items within 35 feet of hot work area or covered with wetted tarpaulins.	✓	
Fire Watch has been provided by Contractor.	✓	
No flammable gases greater than 10% LEL in hot work area.	✓	
All requirements of ITCPRO 9531 for Confined Space Entry have been met and ITC Form 9531-1 has been completed and posted.	✓	
If vessel contains leaded product, all requirements of ITCPRO 9531.3 have been met.		

PERSONNEL PROTECTIVE EQUIPMENT

EYES
- ☐ Chemical Goggles
- ☐ Face Shield
- ☐ Safety Glasses
- ☐ Welders Mask

BODY
- ☐ Environmental Suit: ☐ PVC ☐ Buc
- ☐ Heavy Suit: ☐ PVC ☐ Neoprene
- ☐ Light PVC Suit
- ☑ Yellow Tyvek Suit
- ☐ White Tyvek Suit

EXTREMITIES
- ☑ Hard Hat
- ☑ Gloves
- ☑ Boots ☐ PVC ☐ Neoprene
- ☑ Hoods ☐ PVC ☐ Neoprene
- ☐ Foot Coverings, Disposable

RESPIRATORY
- ☐ Self-Contained Respirator
- ☐ Hose Line Respirator
- ☐ Hose Line W/Egress
- ☑ Cartridge Respirator

Cartridge Type organic

- ☐ Dust Respirator

EQUIPMENT REQUIRED
- ☑ Fire Extinguisher
- ☐ Fire Blanket
- ☐ Charged Water Hose
- ☐ Combustible Gas Indicator

Special Instructions: _____

Co ed by: Wayne Rawlerson (Name Printed) — W. Rawlerson (Signature) — 3/6/95 (Date)

Manager

ITC FORM 9571-1
CS/103-5-85

[redacted] CORPORATION

Operating Area [illegible] Good for this date only [illegible] 8 1995

Specific vessel or equipment [illegible]

Work to be done [illegible]

TESTS

STATE EXACT LOCATION OF TEST	TIME	PERCENT LOWER EXPLOSION LIMIT	PERCENT OXYGEN	OTHERS		INITIA
[illegible]	[illegible]	[illegible]	21.0			[illegible]

CHECK LIST

	Initial: Yes	Initial: Does Not Apply
Operations/plant personnel have been informed of work to be performed	✓	
All tanks/lines/valves are disconnected, blinded, or locked out.	✓	
Equipment and all attached piping has been cleaned and purged with: (check blank) Water___ Steam___ Inert gas___ Air		✓
Electrical service has been locked out and tagged.	✓	
All grounding/bonding wire in place.	✓	
Surrounding equipment and operations are safe for hot work.	✓	
No open vessels or lines within 35 feet of hot work area.	✓	
No combustible items within 35 feet of hot work area or covered with wetted tarpaulins.	✓	
Fire Watch has been provided by Contractor.	✓	
No flammable gases greater than 10% LEL in hot work area.	✓	
All requirements of ITCPRO 9531 for Confined Space Entry have been met and ITC Form 9531-1 has been completed and posted.	✓	
If vessel contains leaded product, all requirements of ITCPRO 9531.3 have been met.		

PERSONNEL PROTECTIVE EQUIPMENT

EYES
- ☐ Chemical Goggles
- ☐ Face Shield
- ☐ Safety Glasses
- ☐ Welders Mask

BODY
- ☐ Environmental Suit: ☐ PVC ☐ Bu
- ☐ Heavy Suit: ☐ PVC ☐ Neoprene
- ☐ Light PVC Suit
- ☐ Yellow Tyvek Suit
- ☐ White Tyvek Suit

EXTREMITIES
- ☐ Hard Hat
- ☐ Gloves
- ☐ Boots ☐ PVC ☐ Neoprene
- ☐ Hoods ☐ PVC ☐ Neoprene
- ☐ Foot Coverings, Disposable

RESPIRATORY
- ☐ Self-Contained Respirator
- ☐ Hose Line Respirator
- ☐ Hose Line W/Egress
- ☐ Cartridge Respirator

Cartridge Type _____
- ☐ Dust Respirator

EQUIPMENT REQUIRED
- ☐ Fire Extinguisher
- ☐ Fire Blanket
- ☐ Charged Water Hose
- ☐ Combustible Gas Indicator

Special Instructions: _____

Completed by: [illegible] / Name Printed — [illegible] / Signature — 3/8/95 Date

[illegible] / Manager

ITC FORM 9571-1
CS/103-5-85

195

INTERNATIONAL TECHNOLOGY CORPORATION

ENTRY PERMIT
PERMIT-REQUIRED CONFINED SPACE (PRCS)

Procedure No. HS300
Revision No. 0
Date 03/01/93
Page 21a of 21

ATTACHMENT 3

Division/Location _____ Job No. _____
Customer _____ Address _____
Location of Job _____ Identity of PRCS _____
Describe Hazards of PRCS (Chemical, Physical) _____

Chemical Introduced Into Space _____

Purpose This Permit Authorized _____

CHECKLIST	YES	DOES NOT APPLY
All lines leading to and from confined space have been blinded or disconnected	✓	
Electrical service disconnected or locked out	✓	
All grounding and bonding cables in place	✓	
All lighting, fittings, power equipment, and extension cords are explosion-proof	✓	
Ground Fault Circuit Indicator (GFCI) checked and functioning	✓	
All ignition sources have been isolate	✓	
All respiratory equipment and alarms checked and functional	✓	
All safety harnesses and life lines checked	✓	
All required PPE checked and in use	✓	
All entrants are confined space trained	✓	
All entrants are trained in the use, care, and limitations of respirators and PPE	✓	
Attendant trained in emergency procedures	✓	
Attendant(s) trained in rescue procedures	✓	
Outside rescue service will be used and they have been notified of this entry	✓	
Appropriate rescue equipment available and checked	✓	
Ventilation system in use and effective	✓	
Entrant(s) can achieve a gas-tight seal with respirator	✓	
Entrant(s) are not wearing contact lenses	✓	
All tests have been completed and indicate that entrance requirements have been met	✓	
Appropriate warning signs have been posted and unauthorized personnel have been excluded from the PRCS and area	✓	

PERSONAL PROTECTIVE EQUIPMENT (Circle)

EYE/FACE
Chemical Goggles
Face Shield
Safety Glasses

EXTREMITIES
Hard Hat
Gloves (Material _____)
Hoods
Boots (Material _____)
Booties

BODY
Suit (Level _____, Material _____)

RESPIRATORY
SCBA
Air Line
Egress System
Air Purifying (Cartridge _____)
Powered Air Purifying (Cartridge _____)

OTHER
Hearing Protection
Harness & Lifeline
Chest or Parachute

RESCUE EQUIPMENT
Mechanical Extraction Device
First Aid Kit
SCBA
Other (Specify) _____

NON-IT RESCUE TEAM
Instructions to Summon Rescue _____

COMMUNICATION
Lifeline "Tug" Signals (See HASP)
Air Powered Horn Signals (See HASP)
Other _____

IF THE ANSWER TO ANY OF THE ABOVE QUESTIONS IS NO, ENTRY IS NOT PERMITTED.

OTHER PERMITS ISSUED FOR WORK IN PRCS: _____

OTHER HAZARD CONTROL PROCEDURES OR INSTRUCTIONS: _____

2-31

INTERNATIONAL TECHNOLOGY CORPORATION

TEST DATA
Oxygen, Flammability and Toxic Contaminants

Procedure No. ES300
Revision No. 0
Date 03/01/93
Page 21b of 21

Time	Percent Oxygen	Percent LEE	PEG	PEG	PEG	PEG	PEG	Initials	Comments
[illegible]	[illegible]	[illegible]							[illegible]

AUTHORIZED ENTRANTS

[illegible] Robinson
[illegible]

AUTHORIZED ATTENDANTS

[illegible]
[illegible]

RESCUE PERSONNEL

Diagram the confined space, indicate location of manways and ventilators. Indicate location(s) where tests conducted.

)(- Manway
= - Ventilator
X - Test Location

ACCEPTABLE ENTRY CONDITIONS

1) Entry Permit Completely Filled Out
2) Oxygen between 20-23.5%
3) Combustible Gases Below 10% LEL
4) Permissible Levels of Toxic Gases (List)

5) Other

PRCS SAFE FOR ENTRY

DATE/TIME 3/8 / 95 NAME ENTRY SUPERVISOR Robinson SIGNATURE [illegible]

CURRENT ENTRY SUPERVISOR (IF DIFFERENT) Stam

ENTRY PERMIT EXPIRES DATE/TIME 3/8 / 95 (No longer than 1 shift) 1730

ENTRY PERMIT CANCELLED

DATE/TIME ____ / ____ SIGNATURE ____

REASON (✓) ____ Work Complete ____ Authorized Conditions not met ____ Incident

DESCRIBE PROBLEMS DURING ENTRY AND RESOLUTION

RECLASSIFICATION TO NON-PERMIT-REQUIRED CONFINED SPACE
Describe hazard removal methods, without use of ventilation.

TESTING VERIFICATION SHOWN AT TIME ____ ON TEST DATA CHART ABOVE.

DATE/TIME ____ / ____ ENTRY SUPERVISOR SIGNATURE ____

REVIEWED BY [illegible] DATE ____

3/9/1995

ATTACHMENT 4

LOCKOUT/TAGOUT FOR ELECTRICAL EQUIPMENT

Job: 51900 SEAN

Device: LTD – Feed Conveyor

Location: LTD

Authorized Person: Vince Vorheies

PREPARATION FOR SHUTDOWN

1. Determine power type and shutoff location
2. Determine if there is more than one energy source
3. Determine magnitude of power (voltage)
4. Notify affected employees in the area that equipment will be under lockout for maintenance.
5. Shutoff power sources to machine.

LOCKOUT/TAGOUT

6. Lock and tag main power switches in the OFF position, remove fuses.
7. Verify that no power is available to the equipment using a voltmeter, if necessary.
8. Drain devices such as capacitor banks.
9. Verify that these devices have no stored energy by use of the voltmeter.
10. Repair equipment.

RETURN TO SERVICE

11. Be sure all connections are made and any unused tools and equipment are removed.
12. Remove lock if necessary to verify machine is repaired. The maintenance employee, while verifying the machine is repaired cannot leave the immediate area.
13. Remove tag from machine.
14. Notify employees in the area that the equipment is available.

Authorized Person: Vince Vorheies

Site Supervisor:

IT Corporation is a wholly owned subsidiary of International Technology Corporation

ATTACHMENT 4

LOCKOUT/TAGOUT FOR ELECTRICAL EQUIPMENT

Job: SEAD

Device: Sluice Conveyor, Air, Feed Conveyor

Location: LTTU

Authorized Person: Rawlinson

PREPARATION FOR SHUTDOWN

1. Determine power type and shutoff location
2. Determine if there is more than one energy source
3. Determine magnitude of power (voltage)
4. Notify affected employees in the area that equipment will be under lockout for maintenance.
5. Shutoff power sources to machine.

LOCKOUT/TAGOUT

6. Lock and tag main power switches in the OFF position, remove fuses.
7. Verify that no power is available to the equipment using a voltmeter, if necessary.
8. Drain devices such as capacitor banks.
9. Verify that these devices have no stored energy by use of the voltmeter.
10. Repair equipment.

RETURN TO SERVICE

11. Be sure all connections are made and any unused tools and equipment are removed.
12. Remove lock if necessary to verify machine is repaired. The maintenance employee, while verifying the machine is repaired cannot leave the immediate area.
13. Remove tag from machine.
14. Notify employees in the area that the equipment is available.

Authorized Person:

Site Supervisor:

IT Corporation is a wholly owned subsidiary of International Technology Corporation

INTERNATIONAL TECHNOLOGY CORPORATION

ENTRY PERMIT
PERMIT-REQUIRED CONFINED SPACE (PRCS)

Page ___ of ___

Procedure No. HS300
Revision No. 0
Date 3/9/95 ~~03/01/93~~
Page 21a of 21

ATTACHMENT 3

Division/Location: THERMAL
Job No. 51-9200
Customer: USACE
Address:
Location of Job: Seneca Army Depot
Identity of PRCS:
Describe Hazards of PRCS (Chemical, Physical):
Chemical Introduced Into Space: N/A
Purpose This Permit Authorized: Repairs.

CHECKLIST	YES	DOES NOT APPLY
All lines leading to and from confined space have been blinded or disconnected	✓	
Electrical service disconnected or locked out	✓	
All grounding and bonding cables in place	✓	
All lighting, fittings, power equipment, and extension cords are explosion-proof	✓	
Ground Fault Circuit Indicator (GFCI) checked and functioning	✓	
All ignition sources have been isolate	✓	
All respiratory equipment and alarms checked and functional	✓	
All safety harnesses and life lines checked		✓
All required PPE checked and in use	✓	
All entrants are confined space trained	✓	
All entrants are trained in the use, care, and limitations of respirators and PPE	✓	
Attendant trained in emergency procedures	✓	
Attendant(s) trained in rescue procedures	✓	
Outside rescue service will be used and they have been notified of this entry	✓	
Appropriate rescue equipment available and checked	✓	
Ventilation system in use and effective		✓
Entrant(s) can achieve a gas-tight seal with respirator		
Entrant(s) are not wearing contact lenses	✓	
All tests have been completed and indicate that entrance requirements have been met	✓	
Appropriate warning signs have been posted and unauthorized personnel have been excluded from the PRCS and area.	✓	

IF THE ANSWER TO ANY OF THE ABOVE QUESTIONS IS NO, ENTRY IS NOT PERMITTED.

PERSONAL PROTECTIVE EQUIPMENT (Circle)

EYE/FACE
Chemical Goggles
Face Shield
Safety Glasses

EXTREMITIES
Hard Hat
Gloves (Material Poly)
Hoods
Boots (Material _____)
Booties

BODY
Suit (Level D, Material poly)

RESPIRATORY
SCBA
Air Line
Egress System
Air Purifying (Cartridge organic)
Powered Air Purifying (Cartridge _____)

OTHER
Hearing Protection
Harness & Lifeline
Chest or Parachute

RESCUE EQUIPMENT
Mechanical Extraction Device
First Aid Kit
SCBA
Other (Specify) _____

NON-IT RESCUE TEAM
Instructions to Summon Rescue

COMMUNICATION
Lifeline "Tug" Signals (See HASP)
Air Powered Horn Signals (See HASP)
Other Radio

OTHER PERMITS ISSUED FOR WORK IN PRCS:

OTHER HAZARD CONTROL PROCEDURES OR INSTRUCTIONS:

2-3

INTERNATIONAL TECHNOLOGY CORPORATION

TEST DATA
Oxygen, Flammability and Toxic Contaminants

Page __ of __ Procedure No. HS300
Revision No. 0
Date 3/9/93 ~~03/01/93~~
Page 21b of 21

Time	Percent Oxygen	Percent LEL	PEG	PEG	PEG	PEG	PEG	Initials	Comments
830	21.0	0							N/A

AUTHORIZED ENTRANTS
Vincent Rawlinson
Vincent Rawlinson
Stanley Stone

AUTHORIZED ATTENDANTS
Juan Cortez

RESCUE PERSONNEL

Diagram the confined space, indicate location of manways and ventilators. Indicate location(s) where tests conducted.

)(- Manway
= - Ventilator
X - Test Location

ACCEPTABLE ENTRY CONDITIONS

1) Entry Permit Completely Filled Out
2) Oxygen between 20-23.5%
3) Combustible Gases Below 10% LEL
4) Permissible Levels of Toxic Gases (List)
5) Other

PRCS SAFE FOR ENTRY

DATE/TIME 3/9 195 NAME ENTRY SUPERVISOR Rawlinson SIGNATURE Rawlinson

CURRENT ENTRY SUPERVISOR (IF DIFFERENT) N/A

ENTRY PERMIT EXPIRES DATE/TIME 3/9/95 (No longer than 1 shift) 19:30

ENTRY PERMIT CANCELLED

DATE/TIME ____/____ SIGNATURE

REASON (✓) ____ Work Complete ____ Authorized Conditions not met ____ Incident

DESCRIBE PROBLEMS DURING ENTRY AND RESOLUTION

RECLASSIFICATION TO NON-PERMIT-REQUIRED CONFINED SPACE
Describe hazard removal methods, without use of ventilation.

TESTING VERIFICATION SHOWN AT TIME ____ ON TEST DATA CHART ABOVE.

DATE/TIME ____/____ ENTRY SUPERVISOR SIGNATURE

REVIEWED BY DATE

2-32

3-12-1995

ATTACHMENT 4

LOCKOUT/TAGOUT FOR ELECTRICAL EQUIPMENT

Job: SEAD 519200

Device: Screen Deck

Location: WTA

Authorized Person: Teri Cibrian

PREPARATION FOR SHUTDOWN

1. Determine power type and shutoff location
2. Determine if there is more than one energy source
3. Determine magnitude of power (voltage)
4. Notify affected employees in the area that equipment will be under lockout for maintenance.
5. Shutoff power sources to machine.

LOCKOUT/TAGOUT

6. Lock and tag main power switches in the OFF position, remove fuses.
7. Verify that no power is available to the equipment using a voltmeter, if necessary.
8. Drain devices such as capacitor banks.
9. Verify that these devices have no stored energy by use of the voltmeter.
10. Repair equipment.

RETURN TO SERVICE

11. Be sure all connections are made and any unused tools and equipment are removed.
12. Remove lock if necessary to verify machine is repaired. The maintenance employee, while verifying the machine is repaired cannot leave the immediate area.
13. Remove tag from machine.
14. Notify employees in the area that the equipment is available.

Authorized Person: Teri Cibrian

Site Supervisor:

2-78

ATTACHMENT 4

LOCKOUT/TAGOUT FOR ELECTRICAL EQUIPMENT

Job: [illegible]

Device: ITD Hammermill

Location: ITD Hammermill Bypass chute

Authorized Person: [illegible]

PREPARATION FOR SHUTDOWN

1. Determine power type and shutoff location
2. Determine if there is more than one energy source
3. Determine magnitude of power (voltage)
4. Notify affected employees in the area that equipment will be under lockout for maintenance.
5. Shutoff power sources to machine.

LOCKOUT/TAGOUT

6. Lock and tag main power switches in the OFF position, remove fuses.
7. Verify that no power is available to the equipment using a voltmeter, if necessary.
8. Drain devices such as capacitor banks.
9. Verify that these devices have no stored energy by use of the voltmeter.
10. Repair equipment.

RETURN TO SERVICE

11. Be sure all connections are made and any unused tools and equipment are removed.
12. Remove lock if necessary to verify machine is repaired. The maintenance employee, while verifying the machine is repaired cannot leave the immediate area.
13. Remove tag from machine.
14. Notify employees in the area that the equipment is available.

Authorized Person: [signature]

Site Supervisor:

IT Corporation is a wholly owned subsidiary of International Technology Corporation

ATTACHMENT 4

LOCKOUT/TAGOUT FOR ELECTRICAL EQUIPMENT

Job: [illegible]

Device: Screen

Location: [illegible] Screen

Authorized Person: [illegible]

PREPARATION FOR SHUTDOWN

1. Determine power type and shutoff location
2. Determine if there is more than one energy source
3. Determine magnitude of power (voltage)
4. Notify affected employees in the area that equipment will be under lockout for maintenance.
5. Shutoff power sources to machine.

LOCKOUT/TAGOUT

6. Lock and tag main power switches in the OFF position, remove fuses.
7. Verify that no power is available to the equipment using a voltmeter, if necessary.
8. Drain devices such as capacitor banks.
9. Verify that these devices have no stored energy by use of the voltmeter.
10. Repair equipment.

RETURN TO SERVICE

11. Be sure all connections are made and any unused tools and equipment are removed.
12. Remove lock if necessary to verify machine is repaired. The maintenance employee, while verifying the machine is repaired cannot leave the immediate area.
13. Remove tag from machine.
14. Notify employees in the area that the equipment is available.

Authorized Person: [illegible]

Site Supervisor:

IT Corporation is a wholly owned subsidiary of International Technology Corporation

ATTACHMENT 5

LOCKOUT/TAGOUT FOR COMPRESSED AIR AND GASES

Job: SEAD 5 [illegible]

Device: Pug Mill Conveyor

Location: LTTD

Authorized Person: [illegible]

PREPARATION FOR SHUTDOWN

1. Determine types and shutoff location
2. Determine if there is more than one energy source
3. Determine magnitude of compressed air, gas, steam, water, or fluids.
4. Notify affected employees in the area that equipment will be locked out for maintenance.
5. Shutoff main supply to machine.

LOCKOUT/TAGOUT

6. Lock and tag main supply in the OFF position.
7. Bleed line and verify that no air or gases remain in the equipment.
8. Repair equipment.

RETURN TO SERVICE

9. Be sure all connections are made and any unused tools and equipment are removed.
10. Remove lock if necessary to verify proper operation.
12. Remove tag.
13. Notify employees in the area that the equipment is available.

Authorized Person: [illegible]

Site Supervisor:

2-79

CORPORATION

HOT WORK PERMIT

Operating Area [illegible] Good for this date only 03-13- 19 95

Specific vessel or equipment Drier

Work to be done Weld Drier Tire Bolts

TESTS

STATE EXACT LOCATION OF TEST	TIME	PERCENT LOWER EXPLOSION LIMIT	PERCENT OXYGEN	OTHERS		INITIA
35' Radius of Drier [illegible]	0415	0	2			

CHECK LIST

	Initial Yes	Initial Does Not Apply
Operations/plant personnel have been informed of work to be performed	[illegible]	
All tanks/lines/valves are disconnected, blinded, or locked out.		[illegible]
uipment and all attached piping has been cleaned and purged with: eck blank) Water____ Steam____ Inert gas____ Air	[illegible]	
Electrical service has been locked out and tagged.		[illegible]
All grounding/bonding wire in place.	[illegible]	
Surrounding equipment and operations are safe for hot work.	[illegible]	
No open vessels or lines within 35 feet of hot work area.	[illegible]	
No combustible items within 35 feet of hot work area or covered with wetted tarpaulins.	[illegible]	
Fire Watch has been provided by Contractor.	[illegible]	
No flammable gases greater than 10% LEL in hot work area.	[illegible]	
All requirements of ITCPRO 9531 for Confined Space Entry have been met and ITC Form 9531-1 has been completed and posted.		[illegible]
If vessel contains leaded product, all requirements of ITCPRO 9531.3 have been met.		

PERSONNEL PROTECTIVE EQUIPMEN

EYES
- ☐ Chemical Goggles
- ☐ Face Shield
- ☐ Safety Glasses
- ☐ Welders Mask

BODY
- ☐ Environmental Suit: ☐ PVC ☐ Bu
- ☐ Heavy Suit: ☐ PVC ☐ Neoprene
- ☐ Light PVC Suit
- ☐ Yellow Tyvek Suit
- ☐ White Tyvek Suit

EXTREMITIES
- ☐ Hard Hat
- ☐ Gloves
- ☐ Boots ☐ PVC ☐ Neoprene
- ☐ Hoods ☐ PVC ☐ Neoprene
- ☐ Foot Coverings, Disposable

RESPIRATORY
- ☐ Self-Contained Respirator
- ☐ Hose Line Respirator
- ☐ Hose Line W/Egress
- ☐ Cartridge Respirator

Cartridge Type ____
- ☐ Dust Respirator

EQUIPMENT REQUIRED
- ☐ Fire Extinguisher
- ☐ Fire Blanket
- ☐ Charged Water Hose
- ☐ Combustible Gas Indicator

Special Instructions: Purge Drier With Exhaust Fan For 30 min, Drier Power OFF / Not Locked Out. Need To Slow Roll Drum To Spot weld.

'eted by: S. Hawkins [signature] ____
Name Printed Signature Date

____
Manager

ITC FORM 9571-1
CS/103-5-85

INTERNATIONAL TECHNOLOGY CORPORATION

ENTRY PERMIT
PERMIT-REQUIRED CONFINED SPACE (PRCS)

Page __ of __

Procedure No. HS300
Revision No. 0
Date 03-12-93 03/01/93
Page 21a of 21

ATTACHMENT 3

Division/Location SEAD
Job No. 519200
Customer USACE
Address Romulus NY
Location of Job Fuel Screen Hopper
Identity of PRCS
Describe Hazards of PRCS (Chemical, Physical) WASTE Fuel Material
Chemical Introduced Into Space Waste Fuel
Purpose This Permit Authorized Tighten One Loose Bolt.

CHECKLIST	YES	DOES NOT APPLY
All lines leading to and from confined space have been blanked or disconnected		Hy
Electrical service disconnected or locked out	Hy	
All grounding and bonding cables in place		—
All lighting, fittings, power equipment, and extension cords are explosion-proof		Hy
Ground Fault Circuit Indicator (GFCI) checked and functioning		Hy
All ignition sources have been isolate		Hy
All respiratory equipment and alarms checked and functional	Hy	
All safety harnesses and life lines checked		—
All required PPE checked and in use	—	
All entrants are confined space trained	Hy	
All entrants are trained in the use, care, and limitations of respirators and PPE	Hy	
Attendant trained in emergency procedures	Hy	
Attendant(s) trained in rescue procedures	Hy	
Outside rescue service will be used and they have been notified of this entry		Hy
Appropriate rescue equipment available and checked		Hy
Ventilation system in use and effective		Hy
Entrant(s) can achieve a gas-tight seal with respirator	Hy	
Entrant(s) are not wearing contact lenses	Hy	
All tests have been completed and indicate that entrance requirements have been met	Hy	
Appropriate warning signs have been posted and unauthorized personnel have been excluded from the PRCS and area		Hy

IF THE ANSWER TO ANY OF THE ABOVE QUESTIONS IS NO, ENTRY IS NOT PERMITTED.

PERSONAL PROTECTIVE EQUIPMENT (Circle)

EYE/FACE
Chemical Goggles
Face Shield
Safety Glasses

EXTREMITIES
Hard Hat
Gloves (Material _____)
Hoods
Boots (Material _____)
Booties

BODY
Suit (Level ____, Material _____)

RESPIRATORY
SCBA
Air Line
Egress System
Air Purifying (Cartridge _____)
Powered Air Purifying (Cartridge _____)

OTHER
Hearing Protection
Harness & Lifeline
Chest or Parachute

RESCUE EQUIPMENT
Mechanical Extraction Device
First Aid Kit
SCBA
Other (Specify) _____

NON-IT RESCUE TEAM
Instructions to Summon Rescue

COMMUNICATION
Lifeline "Tug" Signals (See HASP)
Air Powered Horn Signals (See HASP)
Other _____

OTHER PERMITS ISSUED FOR WORK IN PRCS: Lock Out

OTHER HAZARD CONTROL PROCEDURES OR INSTRUCTIONS: Lock Out, Push Start To prove Lock Out.

2-2

INTERNATIONAL TECHNOLOGY CORPORATION

TEST DATA
Oxygen, Flammability and Toxic Contaminants

Page __ of __

Procedure No. HS300
Revision No. 0
Date 03/01/93
Page 21b of 21

Time	Percent Oxygen	Percent LEL	PEG	PEG	PEG	PEG	PEG	Initials	Comments
1030	21%	0							

AUTHORIZED ENTRANTS
Terry
Peter

AUTHORIZED ATTENDANTS
S. Hopkins
S. Ricci

RESCUE PERSONNEL
S. Hopkins

Diagram the confined space, indicate location of manways and ventilators. Indicate location(s) where tests conducted.

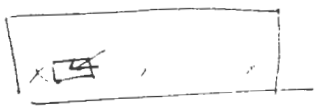

)(- Manway
= - Ventilator
X - Test Location

ACCEPTABLE ENTRY CONDITIONS

1) Entry Permit Completely Filled Out
2) Oxygen between 20-23.5%
3) Combustible Gases Below 10% LEL
4) Permissible Levels of Toxic Gases (List)
5) Other Pack out + Test results

PROC SAFE FOR ENTRY

DATE/TIME 3/22/93 NAME ENTRY SUPERVISOR [illegible] SIGNATURE [illegible]

CURRENT ENTRY SUPERVISOR (IF DIFFERENT) ____

ENTRY PERMIT EXPIRES DATE/TIME ____/____ (No longer than 1 shift)

ENTRY PERMIT CANCELLED

DATE/TIME ____/____ SIGNATURE ____

REASON (✓) ____ Work Complete ____ Authorized Conditions not met ____ Incident

DESCRIBE PROBLEMS DURING ENTRY AND RESOLUTION None. Two Minute Drill

RECLASSIFICATION TO NON-PERMIT-REQUIRED CONFINED SPACE
Describe hazard removal methods, without use of ventilation. ____

TESTING VERIFICATION SHOWN AT TIME ____ ON TEST DATA CHART ABOVE.

DATE/TIME ____/____ ENTRY SUPERVISOR SIGNATURE ____

REVIEWED BY ____ DATE ____

2-32

Operating Area _____ Good for this date only March 14 1995

pecific vessel or equipment Slat feeder

Vork to be done weld in Serapei

TESTS

STATE EXACT LOCATION OF TEST	TIME	PERCENT LOWER EXPLOSION LIMIT	PERCENT OXYGEN	OTHERS		INITI

CHECK LIST

	Initial: Yes	Initial: Does Not Apply
Operations/plant personnel have been informed of work to be performed	✓	
All tanks/lines/valves are disconnected, blinded, or locked out.	✓	
ipment and all attached piping has been cleaned and purged with: ck blank) Water ____ Steam ____ Inert gas ____ Air ____		✓
Electrical service has been locked out and tagged.	✓	
All grounding/bonding wire in place.	✓	
Surrounding equipment and operations are safe for hot work.	✓	
No open vessels or lines within 35 feet of hot work area.	✓	
No combustible items within 35 feet of hot work area or covered with wetted tarpaulins.	✓	
Fire Watch has been provided by Contractor.	✓	
No flammable gases greater than 10% LEL in hot work area.	✓	
All requirements of ITCPRO 9531 for Confined Space Entry have been met and ITC Form 9531-1 has been completed and posted.	✓	
If vessel contains leaded product, all requirements of ITCPRO 9531.3 have been met.		

PERSONNEL PROTECTIVE EQUIPMEN

EYES
- ☐ Chemical Goggles
- ☐ Face Shield
- ☐ Safety Glasses
- ☐ Welders Mask

BODY
- ☐ Environmental Suit: ☐ PVC ☐ Bu
- ☐ Heavy Suit: ☐ PVC ☐ Neoprene
- ☐ Light PVC Suit
- ☑ Yellow Tyvek Suit
- ☐ White Tyvek Suit

EXTREMITIES
- ☑ Hard Hat
- ☑ Gloves
- ☑ Boots ☑ PVC ☐ Neoprene
- ☑ Hoods ☐ PVC ☐ Neoprene
- ☐ Foot Coverings, Disposable

RESPIRATORY
- ☐ Self-Contained Respirator
- ☐ Hose Line Respirator
- ☐ Hose Line W/Egress
- ☑ Cartridge Respirator

Cartridge Type organic
- ☐ Dust Respirator

EQUIPMENT REQUIRED
- ☑ Fire Extinguisher
- ☐ Fire Blanket
- ☐ Charged Water Hose
- ☐ Combustible Gas Indicator

Special Instructions: _____

ted by: Wayne Rawlerson (Name Printed) Wayne Rawlerson (Signature) 3/14/95 (Date)

_____ Manager

ITC FORM 9571-1
CS/103-5-85

INTERNATIONAL TECHNOLOGY CORPORATION

ENTRY PERMIT
PERMIT-REQUIRED CONFINED SPACE (PRCS)

Page __ of __

Procedure No. HS300
Revision No. 0
Date 3/15/95 03/01/93
Page 21a of 21

ATTACHMENT 3

Division/Location: Thermal Plant
Job No. 51-9200
Customer: USAEE
Address:
Location of Job: DRUM DRIER
Identity of PRCS: SAME - INTERIOR
Describe Hazards of PRCS (Chemical, Physical): Spaces
Chemical Introduced Into Space: N/A
Purpose This Permit Authorized: Repairs To Drum

CHECKLIST	YES	DOES NOT APPLY
All lines leading to and from confined space have been blinded or disconnected	✓	
Electrical service disconnected or locked out	✓	
All grounding and bonding cables in place	✓	
All lighting, fittings, power equipment, and extension cords are explosion-proof	✓	
Ground Fault Circuit Indicator (GFCI) checked and functioning	✓	
All ignition sources have been isolate	✓	
All respiratory equipment and alarms checked and functional		✓
All safety harnesses and life lines checked		✓
All required PPE checked and in use	✓	
All entrants are confined space trained	✓	
All entrants are trained in the use, care, and limitations of respirators and PPE	✓	
Attendant trained in emergency procedures	✓	
Attendant(s) trained in rescue procedures	✓	
Outside rescue service will be used and they have been notified of this entry		✓
Appropriate rescue equipment available and checked		✓
Ventilation system in use and effective		✓
Entrant(s) can achieve a gas-tight seal with respirator	✓	
Entrant(s) are not wearing contact lenses	✓	
All tests have been completed and indicate that entrance requirements have been met	✓	
Appropriate warning signs have been posted and unauthorized personnel have been excluded from the PRCS and area	✓	

PERSONAL PROTECTIVE EQUIPMENT (Circle)

EYE/FACE
Chemical Goggles
Face Shield
Safety Glasses

EXTREMITIES
Hard Hat
Gloves (Material nitrile)
Hoods
Boots (Material nitrile)
Booties

BODY
Suit (Level D, Material Poly)

RESPIRATORY
SCBA
Air Line
Egress System
Air Purifying (Cartridge Organic)
Powered Air Purifying (Cartridge ____)

OTHER
Hearing Protection
Harness & Lifeline
Chest or Parachute

RESCUE EQUIPMENT
Mechanical Extraction Device
First Aid Kit
SCBA
Other (Specify) N/A

NON-IT RESCUE TEAM
Instructions to Summon Rescue
N/A

COMMUNICATION
Lifeline "Tug" Signals (See HASP)
Air Powered Horn Signals (See HASP)
Other Radio

IF THE ANSWER TO ANY OF THE ABOVE QUESTIONS IS NO, ENTRY IS NOT PERMITTED.

OTHER PERMITS ISSUED FOR WORK IN PRCS: None

OTHER HAZARD CONTROL PROCEDURES OR INSTRUCTIONS:

2-21

INTERNATIONAL TECHNOLOGY CORPORATION

TEST DATA
Oxygen, Flammability and Toxic Contaminant(s)

Page __ of __ Procedure No. HS300
Revision No. 0
Date 3/15/95 03/01/93
Page 21b of 21

Time	Percent Oxygen	Percent LEL	PEG	PEG	PEG	PEG	PEG	Initials	Comments
1:00	20.9	0						WL	N/A

AUTHORIZED ENTRANTS
Wayne Raulerson
Bill Williams

AUTHORIZED ATTENDANTS
Bill Williams
Wemo Sherman
Wayne Raulerson

RESCUE PERSONNEL

Diagram the confined space. Indicate location of manways and ventilators. Indicate location(s) where tests conducted.

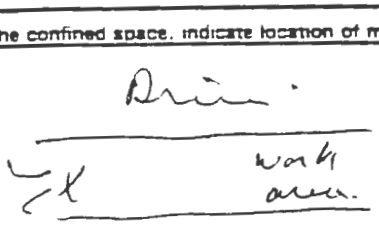

)(- Manway
= - Ventilator
X - Test Location

ACCEPTABLE ENTRY CONDITIONS

1) Entry Permit Completely Filled Out
2) Oxygen between 20-23.5%
3) Combustible Gases Below 10% LEL
4) Permissible Levels of Toxic Gases (List)
5) Other

PRCS SAFE FOR ENTRY

DATE/TIME 3/15/95 NAME ENTRY SUPERVISOR Frank SIGNATURE

CURRENT ENTRY SUPERVISOR (IF DIFFERENT) N/A

ENTRY PERMIT EXPIRES DATE/TIME 3/15/95 (No longer than 1 shift) 1st shift 19:30

ENTRY PERMIT CANCELLED

DATE/TIME ___/___ SIGNATURE

REASON (✓) ___ Work Complete ___ Authorized Conditions not met ___ Incident

DESCRIBE PROBLEMS DURING ENTRY AND RESOLUTION

RECLASSIFICATION TO NON-PERMIT-REQUIRED CONFINED SPACE
Describe hazard removal methods, without use of ventilation.

TESTING VERIFICATION SHOWN AT TIME ___ ON TEST DATA CHART ABOVE.

DATE/TIME ___/___ ENTRY SUPERVISOR SIGNATURE

REVIEWED BY DATE

2-32

ATTACHMENT 6

LOCKOUT/TAGOUT FOR STEAM, WATER, AND FLUID LINES

Job: SEAD

Device: Drier Gas Line

Location: Combustion Encl.

Authorized Person: W. Rankin

PREPARATION FOR SHUTDOWN

1. Determine types and shutoff location
2. Determine if there is more than one energy source
3. Determine magnitude of compressed air or gas.
4. Notify affected employees in the area that equipment will be under lockout for maintenance.
5. Disconnect/shutoff main steam, water or fluid lines to equipment.

LOCKOUT/TAGOUT

6. Lock and tag main supply (i.e. chaining through valve handle with lock) in the OFF position with a bleeder open on the load side.
7. Drain fluids from shutoff valves to equipment.
8. Repair equipment.

RETURN TO SERVICE

9. Be sure all connections are made and any unused tools and equipment are removed.
10. Remove lock if necessary to verify machine is repaired. The maintenance employee cannot leave the immediate area, while verifying the machine is repaired.
11. Remove tag from machine.
12. Notify employees in the area that the equipment is available.

Authorized Person:

Site Supervisor:

2-80

ATTACHMENT 4

LOCKOUT/TAGOUT FOR ELECTRICAL EQUIPMENT

Job: SEAD

Device: Drier, Rugmill Conveyor, Rugmill, stacker.

Location: Thermal Plant

Authorized Person: W. Paulus

PREPARATION FOR SHUTDOWN

1. Determine power type and shutoff location
2. Determine if there is more than one energy source
3. Determine magnitude of power (voltage)
4. Notify affected employees in the area that equipment will be under lockout for maintenance.
5. Shutoff power sources to machine.

LOCKOUT/TAGOUT

6. Lock and tag main power switches in the OFF position, remove fuses.
7. Verify that no power is available to the equipment using a voltmeter, if necessary.
8. Drain devices such as capacitor banks.
9. Verify that these devices have no stored energy by use of the voltmeter.
10. Repair equipment.

RETURN TO SERVICE

11. Be sure all connections are made and any unused tools and equipment are removed.
12. Remove lock if necessary to verify machine is repaired. The maintenance employee, while verifying the machine is repaired cannot leave the immediate area.
13. Remove tag from machine.
14. Notify employees in the area that the equipment is available.

Authorized Person:

Site Supervisor:

IT Corporation is a wholly owned subsidiary of International Technology Corporation

CORPORATION

Operating Area Thermal Plant Good for this date only 3/15 1995

Specific vessel or equipment Drier

Work to be done Cut + Replace Bolts.

TESTS

STATE EXACT LOCATION OF TEST	TIME	PERCENT LOWER EXPLOSION LIMIT	PERCENT OXYGEN	OTHERS		INITIA
Drier entrance	0830	0	20.9			WR

CHECK LIST	Initial: Yes	Initial: Does Not Apply
Operations/plant personnel have been informed of work to be performed	WR	
All tanks/lines/valves are disconnected, blinded, or locked out.	WR	
...ipment and all attached piping has been cleaned and purged with: ...ck blank) Water ____ Steam ____ Inert gas ____ Air ____		WR
Electrical service has been locked out and tagged.	WR	
All grounding/bonding wire in place.	—	
Surrounding equipment and operations are safe for hot work.	—	
No open vessels or lines within 35 feet of hot work area.	—	
No combustible items within 35 feet of hot work area or covered with wetted tarpaulins.	—	
Fire Watch has been provided by Contractor.	—	
No flammable gases greater than 10% LEL in hot work area.	—	
All requirements of ITCPRO 9531 for Confined Space Entry have been met and ITC Form 9531-1 has been completed and posted.	—	
If vessel contains leaded product, all requirements of ITCPRO 9531.3 have been met.	—	

PERSONNEL PROTECTIVE EQUIPMENT

EYES
- ☐ Chemical Goggles
- ☐ Face Shield
- ☐ Safety Glasses
- ☐ Welders Mask

BODY
- ☐ Environmental Suit: ☐ PVC ☐ Buta
- ☐ Heavy Suit: ☐ PVC ☐ Neoprene
- ☐ Light PVC Suit
- ☐ Yellow Tyvek Suit
- ☐ White Tyvek Suit

EXTREMITIES
- ☐ Hard Hat
- ☐ Gloves
- ☐ Boots ☐ PVC ☐ Neoprene
- ☐ Hoods ☐ PVC ☐ Neoprene
- ☐ Foot Coverings, Disposable

RESPIRATORY
- ☐ Self-Contained Respirator
- ☐ Hose Line Respirator
- ☐ Hose Line W/Egress
- ☐ Cartridge Respirator

Cartridge Type ____
- ☐ Dust Respirator

EQUIPMENT REQUIRED
- ☐ Fire Extinguisher
- ☐ Fire Blanket
- ☐ Charged Water Hose
- ☐ Combustible Gas Indicator

Special Instructions: ____

C ...ed by: Wayne Rawlerson (Name Printed) — Wayne Rawlerson (Signature) — 3/15/95 (Date)

Manager

ITC FORM 9571-1
CS/103-5-85

ATTACHMENT 4

LOCKOUT/TAGOUT FOR ELECTRICAL EQUIPMENT

Job: SEAB

Device: LTTB

Location: Slinger Belt

Authorized Person: Vince Vorheis

PREPARATION FOR SHUTDOWN

1. Determine power type and shutoff location
2. Determine if there is more than one energy source
3. Determine magnitude of power (voltage)
4. Notify affected employees in the area that equipment will be under lockout for maintenance.
5. Shutoff power sources to machine.

LOCKOUT/TAGOUT

6. Lock and tag main power switches in the OFF position, remove fuses.
7. Verify that no power is available to the equipment using a voltmeter, if necessary.
8. Drain devices such as capacitor banks.
9. Verify that these devices have no stored energy by use of the voltmeter.
10. Repair equipment.

RETURN TO SERVICE

11. Be sure all connections are made and any unused tools and equipment are removed.
12. Remove lock if necessary to verify machine is repaired. The maintenance employee, while verifying the machine is repaired cannot leave the immediate area.
13. Remove tag from machine.
14. Notify employees in the area that the equipment is available.

Authorized Person: Vince Vorheis

Site Supervisor:

IT Corporation is a wholly owned subsidiary of International Technology Corporation

ATTACHMENT 4

LOCKOUT/TAGOUT FOR ELECTRICAL EQUIPMENT

Job: Change Screen on Screen Deck

Device: Screen

Location: Romulas

Authorized Person: Art Crutchfield

PREPARATION FOR SHUTDOWN

1. Determine power type and shutoff location
2. Determine if there is more than one energy source
3. Determine magnitude of power (voltage)
4. Notify affected employees in the area that equipment will be under lockout for maintenance.
5. Shutoff power sources to machine.

LOCKOUT/TAGOUT

6. Lock and tag main power switches in the OFF position, remove fuses.
7. Verify that no power is available to the equipment using a voltmeter, if necessary.
8. Drain devices such as capacitor banks.
9. Verify that these devices have no stored energy by use of the voltmeter.
10. Repair equipment.

RETURN TO SERVICE

11. Be sure all connections are made and any unused tools and equipment are removed.
12. Remove lock if necessary to verify machine is repaired. The maintenance employee, while verifying the machine is repaired cannot leave the immediate area.
13. Remove tag from machine.
14. Notify employees in the area that the equipment is available.

Authorized Person: [illegible]

Site Supervisor:

IT Corporation is a wholly owned subsidiary of International Technology Corporation

Ash landfill, Seneca Army Depot
Romulus, NY 14541

DATE: 3-21-1995

Page 1 of 2

INTERNATIONAL TECHNOLOGY CORPORATION

ENTRY PERMIT
PERMIT-REQUIRED CONFINED SPACE (PRCS)

Procedure No. HS300
Revision No. 0
Date 03/01/93
Page 21a of 21

ATTACHMENT 3

Division/Location Construction and Remediation, Pgh., PA Job No. 519200
Customer U.S. Army Core of Engineers Address Omaha, Nebraska
Location of Job Thermal Plant Identity of PRCS Drier (Kiln-Incinerator)
Describe Hazards of PRCS (Chemical, Physical) Soil residue may contain traces of T.C.E., 1,2-D.C.E., xylene lead, vinyl chloride, p.a.h's, tools, low overhead, sharp edges
Chemical Introduced Into Space N/A
Purpose This Permit Authorized replace / tighten nuts and bolts

CHECKLIST	YES	DOES NOT APPLY
All lines leading to and from confined space have been blinded or disconnected	FMV	
Electrical service disconnected or locked out	FMV	
All grounding and bonding cables in place	FMV	
All lighting, fittings, power equipment, and extension cords are explosion-proof	FMV	
Ground Fault Circuit Indicator (GFCI) checked and functioning	FMV	
All ignition sources have been isolate	FMV	
All respiratory equipment and alarms checked and functional	FMV	
All safety harnesses and life lines checked		FMV
All required PPE checked and in use	FMV	
All entrants are confined space trained	FMV	
All entrants are trained in the use, care, and limitations of respirators and PPE	FMV	
Attendant trained in emergency procedures	FMV	
Attendant(s) trained in rescue procedures		FMV
Outside rescue service will be used and they have been notified of this entry – CONTACT BASE 7-117	FMV	
Appropriate rescue equipment available and checked		FMV
Ventilation system in use and effective		FMV
Entrant(s) can achieve a gas-tight seal with respirator	FMV	
Entrant(s) are not wearing contact lenses	FMV	
All tests have been completed and indicate that entrance requirements have been met	FMV	
Appropriate warning signs have been posted and unauthorized personnel have been excluded from the PRCS and area	FMV	

PERSONAL PROTECTIVE EQUIPMENT (Circle)

EYE/FACE
Chemical Goggles
Face Shield
Safety Glasses

EXTREMITIES
Hard Hat ✓
Gloves (Material Nitrile ✓
Hoods
Boots (Material Neoprene ✓
Booties

BODY
Suit (Level C, Material Poly Tyvek) ✓

RESPIRATORY
SCBA
Air Line
Egress System
Air Purifying (Cartridge GMC-H) ✓
Powered Air Purifying (Cartridge _____)

OTHER
Hearing Protection if needed ✓
Harness & Lifeline
Chest or Parachute

RESCUE EQUIPMENT
Mechanical Extraction Device
First Aid Kit
SCBA
Other (Specify) _____

NON-IT RESCUE TEAM
Instructions to Summon Rescue
Base 7-117

COMMUNICATION
Lifeline "Tug" Signals (See HASP)
Air Powered Horn Signals (See HASP) ✓
Other Communication Two-way Radios

IF THE ANSWER TO ANY OF THE ABOVE QUESTIONS IS NO, ENTRY IS NOT PERMITTED.

OTHER PERMITS ISSUED FOR WORK IN PRCS: _____

OTHER HAZARD CONTROL PROCEDURES OR INSTRUCTIONS: _____

2-21

DATE: 3-21-1995

Page 2 of 2

Procedure No. HS300
Revision No. 0
Date 03/01/93
Page 21b of 21

INTERNATIONAL TECHNOLOGY CORPORATION

TEST DATA
Oxygen, Flammability and Toxic Contaminant(s)

Time	Percent Oxygen	Percent LEL	PEG	PEG	PEG	PEG	PEG	Initials	SN 467017 HNU Comments
09:05	20.9	0							0.3 ppm
09:15	20.9	0							0.2 ppm
09:30	20.9	0							0.5 ppm
09:45	20.9	0							0.4 ppm
10:00	21.0	0							0.4 ppm
10:15	20.9	0							0.4 ppm
10:30	20.9	0							0.5 ppm
10:50	20.9	0							0.4 ppm

AUTHORIZED ENTRANTS

Brian Collis

AUTHORIZED ATTENDANTS

Frank Vish
Charlie Stamm

RESCUE PERSONNEL

Contract Base
7-117

Diagram the confined space, indicate location of manways and ventilators. Indicate location(s) where tests conducted.

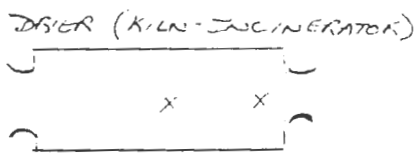

)(- Manway
= - Ventilator
X - Test Location

ACCEPTABLE ENTRY CONDITIONS FMC

1) Entry Permit Completely Filled Out
2) Oxygen between 20-23.5%
3) Combustible Gases Below 10% LEL
4) Permissible Levels of Toxic Gases (List)

5) Other

PRCS SAFE FOR ENTRY

DATE/TIME 3-21-1995 / 09:05 NAME ENTRY SUPERVISOR Frank M Vish SIGNATURE Frank M Vish Jr.

CURRENT ENTRY SUPERVISOR (IF DIFFERENT)

ENTRY PERMIT EXPIRES DATE/TIME 3-21-1995 / 11:00 (No longer than 1 shift)

ENTRY PERMIT CANCELLED

DATE/TIME 3-21-1995 / 11:00 SIGNATURE Frank M Vish Jr.

REASON (✓) ✓ Work Complete ____ Authorized Conditions not met ____ Incident

DESCRIBE PROBLEMS DURING ENTRY AND RESOLUTION

RECLASSIFICATION TO NON-PERMIT-REQUIRED CONFINED SPACE
Describe hazard removal methods, without use of ventilation.

TESTING VERIFICATION SHOWN AT TIME 09:05 ON TEST DATA CHART ABOVE.

DATE/TIME 3-21-1995 / 09:05 ENTRY SUPERVISOR SIGNATURE Frank M Vish Jr.

REVIEWED BY ____ DATE ____

2-32

CORPORATION

Operating Area Pag mill Good for this date only 3/20/95 19

Specific vessel or equipment LTTD

Work to be done Welding

TESTS

STATE EXACT LOCATION OF TEST	TIME	PERCENT LOWER EXPLOSION LIMIT	PERCENT OXYGEN	OTHERS		INITIA

CHECK LIST

	Initial: Yes	Initial: Does Not Apply
Operations/plant personnel have been informed of work to be performed	X	
All tanks/lines/valves are disconnected, blinded, or locked out.	X	
...uipment and all attached piping has been cleaned and purged with: ...eck blank) Water____ Steam____ Inert gas____ Air		X
Electrical service has been locked out and tagged.	X	
All grounding/bonding wire in place.	X	
Surrounding equipment and operations are safe for hot work.	X	
No open vessels or lines within 35 feet of hot work area.	X	
No combustible items within 35 feet of hot work area or covered with wetted tarpaulins.	X	
Fire Watch has been provided by Contractor.	X	
No flammable gases greater than 10% LEL in hot work area.	X	
All requirements of ITCPRO 9531 for Confined Space Entry have been met and ITC Form 9531-1 has been completed and posted. If vessel contains leaded product, all requirements of ITCPRO 9531.3 have been met.	X	

PERSONNEL PROTECTIVE EQUIPMEN

EYES
- ☐ Chemical Goggles
- ☐ Face Shield
- ☒ Safety Glasses
- ☒ Welders Mask

BODY
- ☐ Environmental Suit: ☐ PVC ☐ Bu
- ☐ Heavy Suit: ☐ PVC ☐ Neoprene
- ☐ Light PVC Suit
- ☒ Yellow Tyvek Suit
- ☐ White Tyvek Suit

EXTREMITIES
- ☒ Hard Hat
- ☒ Gloves
- ☒ Boots ☐ PVC ☐ Neoprene
- ☒ Hoods ☐ PVC ☐ Neoprene
- ☐ Foot Coverings, Disposable

RESPIRATORY
- ☐ Self-Contained Respirator
- ☐ Hose Line Respirator
- ☐ Hose Line W/Egress
- ☐ Cartridge Respirator

Cartridge Type Organic
- ☐ Dust Respirator

EQUIPMENT REQUIRED
- ☐ Fire Extinguisher
- ☐ Fire Blanket
- ☐ Charged Water Hose
- ☐ Combustible Gas Indicator

Special Instructions:

C... ...eted by: Art Crutchfield (Name Printed) [signature] (Signature) 3-20-95 (Date)

Manager

ITC FORM 9571-1
CS/103-5-85

ATTACHMENT 4

LOCKOUT/TAGOUT FOR ELECTRICAL EQUIPMENT

Job: Sea D 51, 9200

Device: LTTD - whole unit

Location: Power Distribution Box

Authorized Person: [illegible]

PREPARATION FOR SHUTDOWN

1. Determine power type and shutoff location
2. Determine if there is more than one energy source
3. Determine magnitude of power (voltage)
4. Notify affected employees in the area that equipment will be under lockout for maintenance.
5. Shutoff power sources to machine.

LOCKOUT/TAGOUT

6. Lock and tag main power switches in the OFF position, remove fuses.
7. Verify that no power is available to the equipment using a voltmeter, if necessary.
8. Drain devices such as capacitor banks.
9. Verify that these devices have no stored energy by use of the voltmeter.
10. Repair equipment.

RETURN TO SERVICE

11. Be sure all connections are made and any unused tools and equipment are removed.
12. Remove lock if necessary to verify machine is repaired. The maintenance employee, while verifying the machine is repaired cannot leave the immediate area.
13. Remove tag from machine.
14. Notify employees in the area that the equipment is available.

Authorized Person: [illegible]

Site Supervisor:

IT Corporation is a wholly owned subsidiary of International Technology Corporation

CORPORATION

Operating Area Stacking Conveyor Good for this date only 3/19/95 19 95

pecific vessel or equipment LTTD

Work to be done welding

TESTS

STATE EXACT LOCATION OF TEST	TIME	PERCENT LOWER EXPLOSION LIMIT	PERCENT OXYGEN	OTHERS		INITIA

CHECK LIST	Initial: Yes	Initial: Does Not Apply
Operations/plant personnel have been informed of work to be performed	X	
All tanks/lines/valves are disconnected, blinded, or locked out.	X	
ipment and all attached piping has been cleaned and purged with: sck blank) Water___ Steam___ Inert gas___ Air		X
Electrical service has been locked out and tagged.	X	
All grounding/bonding wire in place.	X	
Surrounding equipment and operations are safe for hot work.	X	
No open vessels or lines within 35 feet of hot work area.	X	
No combustible items within 35 feet of hot work area or covered with wetted tarpaulins.	X	
Fire Watch has been provided by Contractor.	X	
No flammable gases greater than 10% LEL in hot work area.	X	
All requirements of ITCPRO 9531 for Confined Space Entry have been met and ITC Form 9531-1 has been completed and posted.	X	
If vessel contains leaded product, all requirements of ITCPRO 9531.3 have been met.		

PERSONNEL PROTECTIVE EQUIPMENT

EYES
- ☐ Chemical Goggles
- ☐ Face Shield
- ☒ Safety Glasses
- ☒ Welders Mask

BODY
- ☐ Environmental Suit: ☐ PVC ☐ Bu
- ☐ Heavy Suit: ☐ PVC ☐ Neoprene
- ☐ Light PVC Suit
- ☒ Yellow Tyvek Suit
- ☐ White Tyvek Suit

EXTREMITIES
- ☒ Hard Hat
- ☒ Gloves
- ☒ Boots ☐ PVC ☐ Neoprene
- ☒ Hoods ☐ PVC ☐ Neoprene
- ☒ Foot Coverings, Disposable

RESPIRATORY
- ☐ Self-Contained Respirator
- ☐ Hose Line Respirator
- ☐ Hose Line W/Egress
- ☐ Cartridge Respirator

Cartridge Type Organic

- ☐ Dust Respirator

EQUIPMENT REQUIRED
- ☐ Fire Extinguisher
- ☐ Fire Blanket
- ☐ Charged Water Hose
- ☐ Combustible Gas Indicator

Special Instructions:

C eted by: Tim Clark (Name Printed) Timothy F Clark (Signature) 3/19/95 (Date)

Manager

ITC FORM 9571-1
CS/103-5-85

ATTACHMENT 4

LOCKOUT/TAGOUT FOR ELECTRICAL EQUIPMENT

Job: SEAP 519200

Device: LTTR- whole Unit

Location: Power Distribution Box

Authorized Person: Tim Clark

PREPARATION FOR SHUTDOWN

1. Determine power type and shutoff location
2. Determine if there is more than one energy source
3. Determine magnitude of power (voltage)
4. Notify affected employees in the area that equipment will be under lockout for maintenance.
5. Shutoff power sources to machine.

LOCKOUT/TAGOUT

6. Lock and tag main power switches in the OFF position, remove fuses.
7. Verify that no power is available to the equipment using a voltmeter, if necessary.
8. Drain devices such as capacitor banks.
9. Verify that these devices have no stored energy by use of the voltmeter.
10. Repair equipment.

RETURN TO SERVICE

11. Be sure all connections are made and any unused tools and equipment are removed.
12. Remove lock if necessary to verify machine is repaired. The maintenance employee, while verifying the machine is repaired cannot leave the immediate area.
13. Remove tag from machine.
14. Notify employees in the area that the equipment is available.

Authorized Person:

Site Supervisor:

IT Corporation is a wholly owned subsidiary of International Technology Corporation

ATTACHMENT 4

LOCKOUT/TAGOUT FOR ELECTRICAL EQUIPMENT

Job: SEAD 519200

Device: Slinger Belt

Location: LTTD

Authorized Person: [signature]

PREPARATION FOR SHUTDOWN

1. Determine power type and shutoff location
2. Determine if there is more than one energy source
3. Determine magnitude of power (voltage)
4. Notify affected employees in the area that equipment will be under lockout for maintenance.
5. Shutoff power sources to machine.

LOCKOUT/TAGOUT

6. Lock and tag main power switches in the OFF position, remove fuses.
7. Verify that no power is available to the equipment using a voltmeter, if necessary.
8. Drain devices such as capacitor banks.
9. Verify that these devices have no stored energy by use of the voltmeter.
10. Repair equipment.

RETURN TO SERVICE

11. Be sure all connections are made and any unused tools and equipment are removed.
12. Remove lock if necessary to verify machine is repaired. The maintenance employee, while verifying the machine is repaired cannot leave the immediate area.
13. Remove tag from machine.
14. Notify employees in the area that the equipment is available.

Authorized Person: [signature]

Site Supervisor: [signature]

IT Corporation is a wholly owned subsidiary of International Technology Corporation

ATTACHMENT 4

LOCKOUT/TAGOUT FOR ELECTRICAL EQUIPMENT

Job: SEAP

Device: Exhaust fan, Screen, Crusher.

Location: Thermal unit

Authorized Person: [illegible]

PREPARATION FOR SHUTDOWN

1. Determine power type and shutoff location
2. Determine if there is more than one energy source
3. Determine magnitude of power (voltage)
4. Notify affected employees in the area that equipment will be under lockout for maintenance.
5. Shutoff power sources to machine.

LOCKOUT/TAGOUT

6. Lock and tag main power switches in the OFF position, remove fuses.
7. Verify that no power is available to the equipment using a voltmeter, if necessary.
8. Drain devices such as capacitor banks.
9. Verify that these devices have no stored energy by use of the voltmeter.
10. Repair equipment.

RETURN TO SERVICE

11. Be sure all connections are made and any unused tools and equipment are removed.
12. Remove lock if necessary to verify machine is repaired. The maintenance employee, while verifying the machine is repaired cannot leave the immediate area.
13. Remove tag from machine.
14. Notify employees in the area that the equipment is available.

Authorized Person:

[illegible]

Site Supervisor:

IT Corporation is a wholly owned subsidiary of International Technology Corporation

CORPORATION

Operating Area SEAD Good for this date only 3/23 1995

Specific vessel or equipment Screen and Exhaust fan

Work to be done Cut out bolts and replace on Screen
Cut old Bearing off Exhaust fan.

TESTS

STATE EXACT LOCATION OF TEST	TIME	PERCENT LOWER EXPLOSION LIMIT	PERCENT OXYGEN	OTHERS		INITIA
N/A						

CHECK LIST

	Initial: Yes	Initial: Does Not Apply
Operations/plant personnel have been informed of work to be performed	WR	
All tanks/lines/valves are disconnected, blinded, or locked out.	WR	
Equipment and all attached piping has been cleaned and purged with: (check blank) Water ____ Steam ____ Inert gas ____ Air ____		WR
Electrical service has been locked out and tagged.	WR	
All grounding/bonding wire in place.	WR	
Surrounding equipment and operations are safe for hot work.	WR	
No open vessels or lines within 35 feet of hot work area.	WR	
No combustible items within 35 feet of hot work area or covered with wetted tarpaulins.	WR	
Fire Watch has been provided by Contractor.	WR	
No flammable gases greater than 10% LEL in hot work area.	WR	
All requirements of ITCPRO 9531 for Confined Space Entry have been met and ITC Form 9531-1 has been completed and posted.	WR	
If vessel contains leaded product, all requirements of ITCPRO 9531.3 have been met.		

PERSONNEL PROTECTIVE EQUIPMENT

EYES
- ☐ Chemical Goggles
- ☐ Face Shield
- ☐ Safety Glasses
- ☐ Welders Mask

BODY
- ☐ Environmental Suit: ☐ PVC ☐ Buna
- ☐ Heavy Suit: ☐ PVC ☐ Neoprene
- ☐ Light PVC Suit
- ☐ Yellow Tyvek Suit
- ☐ White Tyvek Suit

EXTREMITIES
- ☐ Hard Hat
- ☐ Gloves
- ☐ Boots ☐ PVC ☐ Neoprene
- ☐ Hoods ☐ PVC ☐ Neoprene
- ☐ Foot Coverings, Disposable

RESPIRATORY
- ☐ Self-Contained Respirator
- ☐ Hose Line Respirator
- ☐ Hose Line W/Egress
- ☐ Cartridge Respirator

Cartridge Type ____
- ☐ Dust Respirator

EQUIPMENT REQUIRED
- ☐ Fire Extinguisher
- ☐ Fire Blanket
- ☐ Charged Water Hose
- ☐ Combustible Gas Indicator

Special Instructions: ____

Completed by: Wayne Raulerson (Name Printed) — Signature — 3/23/95 (Date)

Manager

ITC FORM 9571-1
CS/103-5-85

ATTACHMENT 4

LOCKOUT/TAGOUT FOR ELECTRICAL EQUIPMENT

Job: SEAD 519200

Device: Slinger Motor (Bad Wire)

Location: LTTD

Authorized Person: [signature]

PREPARATION FOR SHUTDOWN

1. Determine power type and shutoff location
2. Determine if there is more than one energy source
3. Determine magnitude of power (voltage)
4. Notify affected employees in the area that equipment will be under lockout for maintenance.
5. Shutoff power sources to machine.

LOCKOUT/TAGOUT

6. Lock and tag main power switches in the OFF position, remove fuses.
7. Verify that no power is available to the equipment using a voltmeter, if necessary.
8. Drain devices such as capacitor banks.
9. Verify that these devices have no stored energy by use of the voltmeter.
10. Repair equipment.

RETURN TO SERVICE

11. Be sure all connections are made and any unused tools and equipment are removed.
12. Remove lock if necessary to verify machine is repaired. The maintenance employee, while verifying the machine is repaired cannot leave the immediate area.
13. Remove tag from machine.
14. Notify employees in the area that the equipment is available.

Authorized Person: [signature]

Site Supervisor: [signature]

IT Corporation is a wholly owned subsidiary of International Technology Corporation

ATTACHMENT 4

LOCKOUT/TAGOUT FOR ELECTRICAL EQUIPMENT

Job: SEAD 519200

Device: Pug Mill (Repack Bearing)

Location: LTTD

Authorized Person: [signature]

PREPARATION FOR SHUTDOWN

1. Determine power type and shutoff location
2. Determine if there is more than one energy source
3. Determine magnitude of power (voltage)
4. Notify affected employees in the area that equipment will be under lockout for maintenance.
5. Shutoff power sources to machine.

LOCKOUT/TAGOUT

6. Lock and tag main power switches in the OFF position, remove fuses.
7. Verify that no power is available to the equipment using a voltmeter, if necessary.
8. Drain devices such as capacitor banks.
9. Verify that these devices have no stored energy by use of the voltmeter.
10. Repair equipment.

RETURN TO SERVICE

11. Be sure all connections are made and any unused tools and equipment are removed.
12. Remove lock if necessary to verify machine is repaired. The maintenance employee, while verifying the machine is repaired cannot leave the immediate area.
13. Remove tag from machine.
14. Notify employees in the area that the equipment is available.

Authorized Person: [signature]

Site Supervisor: [signature]

IT Corporation is a wholly owned subsidiary of International Technology Corporation

CORPORATION

HOT WORK PERMIT

Operating Area LTTD Good for this date only 03-25 19 95

Specific vessel or equipment Pugmill

Work to be done Repack Bearing + Cut Metal Hung Inside.

TESTS

STATE EXACT LOCATION OF TEST	TIME	PERCENT LOWER EXPLOSION LIMIT	PERCENT OXYGEN	OTHERS		INITIAL
inside pugmill + 35' radius around.	0700	0%	21%			

CHECK LIST

	Initial: Yes	Initial: Does Not Apply
Operations/plant personnel have been informed of work to be performed	Hyp	
All tanks/lines/valves are disconnected, blinded, or locked out.		Hyp
Equipment and all attached piping has been cleaned and purged with: (check blank) Water ____ Steam ____ Inert gas ____ Air ____	Hyp	
Electrical service has been locked out and tagged.	Hyp	
All grounding/bonding wire in place.	Hyp	
Surrounding equipment and operations are safe for hot work.	Hyp	
No open vessels or lines within 35 feet of hot work area.	Hyp	
No combustible items within 35 feet of hot work area or covered with wetted tarpaulins.	Hyp	
Fire Watch has been provided by Contractor.	Hyp	
No flammable gases greater than 10% LEL in hot work area.	Hyp	
All requirements of ITCPRO 9531 for Confined Space Entry have been met and ITC Form 9531-1 has been completed and posted.	Hyp	Hyp
If vessel contains leaded product, all requirements of ITCPRO 9531.3 have been met.		

PERSONNEL PROTECTIVE EQUIPMENT

EYES
- ☐ Chemical Goggles
- ☐ Face Shield
- ☐ Safety Glasses
- ☐ Welders Mask

BODY
- ☐ Environmental Suit: ☐ PVC ☐ Buna
- ☐ Heavy Suit: ☐ PVC ☐ Neoprene
- ☐ Light PVC Suit
- ☐ Yellow Tyvek Suit
- ☐ White Tyvek Suit

EXTREMITIES
- ☐ Hard Hat
- ☐ Gloves
- ☐ Boots ☐ PVC ☐ Neoprene
- ☐ Hoods ☐ PVC ☐ Neoprene
- ☐ Foot Coverings, Disposable

RESPIRATORY
- ☐ Self-Contained Respirator
- ☐ Hose Line Respirator
- ☐ Hose Line W/Egress
- ☐ Cartridge Respirator

Cartridge Type ____
- ☐ Dust Respirator

EQUIPMENT REQUIRED
- ☐ Fire Extinguisher
- ☐ Fire Blanket
- ☐ Charged Water Hose
- ☐ Combustible Gas Indicator

Special Instructions: ____

Completed by: S. Hopkins (Name Printed) Hopkins (Signature) ____ (Date)

____ (Manager)

ITC FORM 9571-1
CS/103-5-85

INTERNATIONAL TECHNOLOGY CORPORATION

ENTRY PERMIT
PERMIT-REQUIRED CONFINED SPACE (PRCS)

Page __ of __

Procedure No. HS300
Revision No. 0
Date 03-25-95 03/01/93
Page 21a of 21

ATTACHMENT 3

Division/Location SEAD
Job No. 519200
Customer USACE
Address Romulus NY
Location of Job Ash
Identity of PRCS A. Hyldin
Describe Hazards of PRCS (Chemical, Physical) None, Cleaned

Chemical Introduced Into Space ~~[illegible]~~ Ash

Purpose This Permit Authorized To Cut A piece of metal that fell through system and hung up inside Pug mill. No "Body" Entry.

CHECKLIST	YES	DOES NOT APPLY
All lines leading to and from confined space have been blanded or disconnected	Hy	
Electrical service disconnected or locked out	Hy	
All grounding and bonding cables in place	Hy	
All lighting, fittings, power equipment, and extension cords are explosion-proof	Hy	
Ground Fault Circuit Indicator (GFCI) checked and functioning		Hy
All ignition sources have been isolate		Hy
All respiratory equipment and alarms checked and functional	Hy	
All safety harnesses and life lines checked		Hy
All required PPE checked and in use	Hy	
All entrants are confined space trained	Hy	
All entrants are trained in the use, care, and limitations of respirators and PPE	Hy	
Attendant trained in emergency procedures	Hy	
Attendant(s) trained in rescue procedures	Hy	
Outside rescue service will be used and they have been notified of this entry		Hy
Appropriate rescue equipment available and checked		Hy
Ventilation system in use and effective	Hy	
Entrant(s) can achieve a gas-tight seal with respirator	Hy	
Entrant(s) are not wearing contact lenses	Hy	
All tests have been completed and indicate that entrance requirements have been met	Hy	
Appropriate warning signs have been posted and unauthorized personnel have been excluded from the PRCS and area	Hy	

IF THE ANSWER TO ANY OF THE ABOVE QUESTIONS IS NO, ENTRY IS NOT PERMITTED.

PERSONAL PROTECTIVE EQUIPMENT (Circle)

EYE/FACE
Chemical Goggles
Face Shield
Safety Glasses

EXTREMITIES
Hard Hat
Gloves (Material _____)
Hoods
Boots (Material _____)
Booties

BODY
Suit (Level ____, Material _____)

RESPIRATORY
SCBA
Air Line
Egress System
Air Purifying (Cartridge _____)
Powered Air Purifying (Cartridge _____)

OTHER
Hearing Protection
Harness & Lifeline
Chest or Parachute

RESCUE EQUIPMENT
Mechanical Extraction Device
First Aid Kit
SCBA
Other (Specify) _____

NON-IT RESCUE TEAM
Instructions to Summon Rescue

COMMUNICATION
Lifeline "Tug" Signals (See HASP)
Air Powered Horn Signals (See HASP)
Other _____

OTHER PERMITS ISSUED FOR WORK IN PRCS: Hot Work + Lock Out

OTHER HAZARD CONTROL PROCEDURES OR INSTRUCTIONS: None

2-3

INTERNATIONAL TECHNOLOGY CORPORATION

TEST DATA
Oxygen, Flammability and Toxic Contaminants

Page __ of __

Procedure No. HS300
Revision No. 0
Date 03/01/93
Page 21b of 21

Time	Percent Oxygen	Percent LEL	PEG	PEG	PEG	PEG	PEG	Initials	Comments
1700	21%	0							

AUTHORIZED ENTRANTS
S. Hopkins
Tom Garan

AUTHORIZED ATTENDANTS
S. Hopkins
Tom Garan

RESCUE PERSONNEL
S. Hopkins
Tom Garan

Diagram the confined space, indicate location of manways and ventilators. Indicate location(s) where tests conducted.

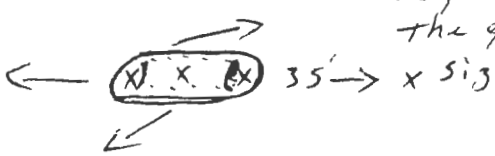

Pugmill sits on the ground, Appx x size 3'x6'.

|| - Manway
= - Ventilator
X - Test Location

ACCEPTABLE ENTRY CONDITIONS

1) Entry Permit Completely Filled Out
2) Oxygen between 20-23.5%
3) Combustible Gases Below 10% LEL
4) Permissible Levels of Toxic Gases (List)

5) Other

PROS SAFE FOR ENTRY

DATE/TIME 0700 3/27/95 NAME ENTRY SUPERVISOR S. Hopkins SIGNATURE

CURRENT ENTRY SUPERVISOR (IF DIFFERENT) No

ENTRY PERMIT EXPIRES DATE/TIME ____/____ (No longer than 1 shift)

ENTRY PERMIT CANCELLED

DATE/TIME ____/____ SIGNATURE

REASON (✓) ____ Work Complete ____ Authorized Conditions not met ____ Incident

DESCRIBE PROBLEMS DURING ENTRY AND RESOLUTION

RECLASSIFICATION TO NON-PERMIT-REQUIRED CONFINED SPACE
Describe hazard removal methods, without use of ventilation.

TESTING VERIFICATION SHOWN AT TIME ____ ON TEST DATA CHART ABOVE.

DATE/TIME ____/____ ENTRY SUPERVISOR SIGNATURE

REVIEWED BY ____ DATE ____

2-32

HEAT, FLAME-PRODUCING DEVICE AND/OR [illegible]

PERMIT # 95-17 ISSUED TO Corps of Engineers [illegible]

PURPOSE: To permit smoking in the Corps of Engineers trailer located at the ash landfill.

OPERATING EMPLOYEE Denzie White SUPERVISOR Denzie White

FIRE EXTINGUISHER REQUIRED: CO2 or Dry Chemical

REQUIREMENTS:

( ) Prior to commencement of work, the person(s) named on the permit will contact the foreman of the building or area in which the work is to be done.

( ) All explosives will be removed from the immediate vicinity of job site.

( ) No gasoline-operated equipment will be used nearer than 50 feet or refueled closer than 100 feet of an explosive location or operation. Refueling will be done with an approved-type safety can.

( ) All portable electric equipment will be properly grounded.

(X) Where open-flame operations are conducted, all combustible material where practicable will be removed from the site of the operation or will be protected with flame-resistant covering.

(X) Authorized to carry matches, spark-producing or heat-producing device to and from work site in Restricted Area.

(X) Matches, spark or heat-producing devices will be removed from the area ~~[illegible]~~ to _____ at the end of the work day.

( ) Operator of oxy-acetylene [illegible] equipment will wear fire-resistant [illegible] and [illegible].

REMARKS:

Ensure that a fire extinguisher is available at the trailer as well as a cigarette disposal can.

APPROVED: SAFETY MANAGER DIR/QUALITY ASSURANCE FIRE CHIEF

ON EXPIRATION OF PERMIT OR COMPLETION OF THE JOB, PERMIT WILL BE TURNED IN TO THE OFFICE OF THE [illegible], OR TO THE GUARD ON DUTY AT POST. ANY VIOLATION OF THE REQUIREMENTS OF THIS PERMIT WILL BE JUSTIFICATION FOR STOPPING THE OPERATION UNTIL THE REQUIREMENTS ARE COMPLIED WITH.

"IN CASE OF SERIOUS ACCIDENT OR FIRE - DIAL 117"

ATTACHMENT 4

LOCKOUT/TAGOUT FOR ELECTRICAL EQUIPMENT

Job: SEAD - 519200

Device: Material Screw

Location: LTTD

Authorized Person: Scott Hopkins

PREPARATION FOR SHUTDOWN

1. Determine power type and shutoff location
2. Determine if there is more than one energy source
3. Determine magnitude of power (voltage)
4. Notify affected employees in the area that equipment will be under lockout for maintenance.
5. Shutoff power sources to machine.

LOCKOUT/TAGOUT

6. Lock and tag main power switches in the OFF position, remove fuses.
7. Verify that no power is available to the equipment using a voltmeter, if necessary.
8. Drain devices such as capacitor banks.
9. Verify that these devices have no stored energy by use of the voltmeter.
10. Repair equipment.

RETURN TO SERVICE

11. Be sure all connections are made and any unused tools and equipment are removed.
12. Remove lock if necessary to verify machine is repaired. The maintenance employee, while verifying the machine is repaired cannot leave the immediate area.
13. Remove tag from machine.
14. Notify employees in the area that the equipment is available.

Authorized Person: Scott Hopkins

Site Supervisor:

IT Corporation is a wholly owned subsidiary of International Technology Corporation

INTERNATIONAL TECHNOLOGY CORPORATION

ENTRY PERMIT
PERMIT-REQUIRED CONFINED SPACE (PRCS)

Page __ of __

Procedure No. HS300
Revision No. 0
Date 33095 03/01/93
Page 21a of 21

ATTACHMENT 3

Division/Location _____ Job No. 519200
Customer USATCO Address _____
Location of Job _____ Identity of PRCS Water crusher
Describe Hazards of PRCS (Chemical, Physical) NA

Chemical Introduced into Space _____

Purpose This Permit Authorized _____

CHECKLIST	YES	DOES NOT APPLY
All lines leading to and from confined space have been blinded or disconnected		TC
Electrical service disconnected or locked out	TC	
All grounding and bonding cables in place	TC	
All lighting, fittings, power equipment, and extension cords are explosion-proof	TC	
Ground Fault Circuit Indicator (GFCI) checked and functioning	TC	
All ignition sources have been isolate	TC	
All respiratory equipment and alarms checked and functional		TC
All safety harnesses and life lines checked		TC
All required PPE checked and in use	TC	
All entrants are confined space trained	TC	
All entrants are trained in the use, care, and limitations of respirators and PPE	TC	
Attendant trained in emergency procedures	TC	
Attendant(s) trained in rescue procedures	TC	
Outside rescue service will be used and they have been notified of this entry		TC
Appropriate rescue equipment available and checked	TC	
Ventilation system in use and effective		TC
Entrant(s) can achieve a gas-tight seal with respirator	TC	
Entrant(s) are not wearing contact lenses	TC	
All tests have been completed and indicate that entrance requirements have been met	TC	
Appropriate warning signs have been posted and unauthorized personnel have been excluded from the PRCS and area	TC	

PERSONAL PROTECTIVE EQUIPMENT (Circle)

EYE/FACE
Chemical Goggles
Face Shield
Safety Glasses

EXTREMITIES
Hard Hat
Gloves (Material Nitrile)
Hoods
Boots (Material _____)
Booties

BODY
Suit (Level C, Material Poly)

RESPIRATORY
SCBA
Air Line
Egress System
Air Purifying (Cartridge Organic)
Powered Air Purifying (Cartridge _____)

OTHER
Hearing Protection
Harness & Lifeline
Chest or Parachute

RESCUE EQUIPMENT
Mechanical Extraction Device
First Aid Kit
SCBA
Other (Specify) _____

NON-IT RESCUE TEAM
Instructions to Summon Rescue _____

COMMUNICATION
Lifeline "Tug" Signals (See HASP)
Air Powered Horn Signals (See HASP)
Other Radio

THE ANSWER TO ANY OF THE ABOVE QUESTIONS IS NO. ENTRY IS NOT PERMITTED.

OTHER PERMITS ISSUED FOR WORK IN PRCS: _____

OTHER HAZARD CONTROL PROCEDURES OR INSTRUCTIONS: _____

2-21

INTERNATIONAL TECHNOLOGY CORPORATION

TEST DATA
Oxygen, Flammability and Toxic Contaminants

Page __ of __ Procedure No. HS300
Revision No. 0
Date 03/01/93
Page 21b of 21

Time	Percent Oxygen	Percent LEL	PEG	PEG	PEG	PEG	PEG	Initials	Comments
2015	21	0							

AUTHORIZED ENTRANTS

AUTHORIZED ATTENDANTS

RESCUE PERSONNEL

Diagram the confined space, indicate location of manways and ventilators. Indicate location(s) where tests conducted.

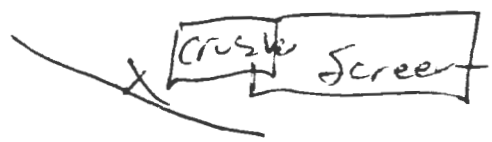

)(- Manway

= - Ventilator

X - Test Location

ACCEPTABLE ENTRY CONDITIONS

1) Entry Permit Completely Filled Out
2) Oxygen between 20-23.5%
3) Combustible Gases Below 10% LEL
4) Permissible Levels of Toxic Gases (List)

5) Other

PRCS SAFE FOR ENTRY

DATE/TIME ____/____ NAME ENTRY SUPERVISOR _____ SIGNATURE _____

CURRENT ENTRY SUPERVISOR (IF DIFFERENT) _____

ENTRY PERMIT EXPIRES DATE/TIME ____/____ (No longer than 1 shift)

ENTRY PERMIT CANCELLED

DATE/TIME ____/____ SIGNATURE _____

REASON (✓) ____ Work Complete ____ Authorized Conditions not met ____ Incident

DESCRIBE PROBLEMS DURING ENTRY AND RESOLUTION

RECLASSIFICATION TO NON-PERMIT-REQUIRED CONFINED SPACE
Describe hazard removal methods, without use of ventilation.

TESTING VERIFICATION SHOWN AT TIME _____ ON TEST DATA CHART ABOVE.

DATE/TIME ____/____ ENTRY SUPERVISOR SIGNATURE _____

REVIEWED BY _____ DATE _____

2-32

INTERNATIONAL TECHNOLOGY CORPORATION

Page __ of __

Procedure No. HS300
Revision No. 0
Date 3/30/95 0[redacted]
Page 21a of 21

ATTACHMENT 3

ENTRY PERMIT
PERMIT-REQUIRED CONFINED SPACE (PRCS)

ision/Location _____ Job No. 51-9200
stomer USARK Address _____
Location of Job Thermal Unit Identity of PRCS under crusher
Describe Hazards of PRCS (Chemical, Physical) Drier

Chemical Introduced Into Space _____

Purpose This Permit Authorized _____

CHECKLIST	YES	DOES NOT APPLY
All lines leading to and from confined space have been blinded or disconnected		WR
Electrical service disconnected or locked out	WR	
All grounding and bonding cables in place	WR	
All lighting, fittings, power equipment, and extension cords are explosion-proof	WR	
Ground Fault Circuit Indicator (GFCI) checked and functioning	WR	
All ignition sources have been isolate	WR	
All respiratory equipment and alarms checked and functional		WR
ll safety harnesses and life lines checked		WR
All required PPE checked and in use	WR	
All entrants are confined space trained	WR	
All entrants are trained in the use, care, and limitations of respirators and PPE	WR	
Attendant trained in emergency procedures	WR	
Attendant(s) trained in rescue procedures	WR	
Outside rescue service will be used and they have been notified of this entry		WR
Appropriate rescue equipment available and checked	WR	
Ventilation system in use and effective		WR
Entrant(s) can achieve a gas-tight seal with respirator	WR	
Entrant(s) are not wearing contact lenses	WR	
All tests have been completed and indicate that entrance requirements have been met	WR	
Appropriate warning signs have been posted and unauthorized personnel have been excluded from the PRCS d area	WR	

PERSONAL PROTECTIVE EQUIPMENT (Circle)

EYE/FACE
Chemical Goggles
Face Shield
Safety Glasses

EXTREMITIES
Hard Hat
Gloves (Material [illegible])
Hoods
Boots (Material _____)
Booties

BODY
Suit (Level C, Material poly)

RESPIRATORY
SCBA
Air Line
Egress System
Air Purifying (Cartridge organic)
Powered Air Purifying
(Cartridge _____)

OTHER
Hearing Protection
Harness & Lifeline
Chest or Parachute

RESCUE EQUIPMENT
Mechanical Extraction Device
First Aid Kit
SCBA
Other (Specify) _____

NON-IT RESCUE TEAM
Instructions to Summon Rescue

COMMUNICATION
Lifeline "Tug" Signals (See HASP)
Air Powered Horn Signals (See HASP)
Other Radio

HE ANSWER TO ANY OF THE ABOVE QUESTIONS IS NO, ENTRY IS NOT PERMITTED.

THER PERMITS ISSUED FOR WORK IN PRCS: _____

OTHER HAZARD CONTROL PROCEDURES OR INSTRUCTIONS: _____

2-21

INTERNATIONAL TECHNOLOGY CORPORATION

TEST DATA
Oxygen, Flammability and Toxic Contaminants)

Page __ of __ Procedure No. HS300
Revision No. 0
Date 03/01/93
Page 21b of 21

Time	Percent Oxygen	Percent LEL	PEG	PEG	PEG	PEG	PEG	Initials	Comments
15	21.0	Ø						-	Bill Williams

AUTHORIZED ENTRANTS

Bill Williams
Shawn Lee Pugno
Smitty Stone

AUTHORIZED ATTENDANTS

Alan Sherman
Art Crutchfield

RESCUE PERSONNEL

Diagram the confined space, indicate location of manways and ventilators. Indicate location(s) where tests conducted.

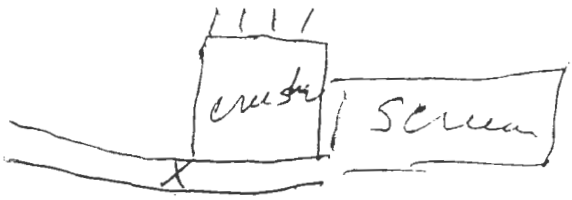

)(- Manway
= - Ventilator
X - Test Location

ACCEPTABLE ENTRY CONDITIONS

1) Entry Permit Completely Filled Out
2) Oxygen between 20-23.5%
3) Combustible Gases Below 10% LEL
4) Permissible Levels of Toxic Gases (List)

5) Other

PRCS SAFE FOR ENTRY

DATE/TIME ____/____ NAME ENTRY SUPERVISOR _____ SIGNATURE _____

CURRENT ENTRY SUPERVISOR (IF DIFFERENT) _____

ENTRY PERMIT EXPIRES DATE/TIME ____/____ (No longer than 1 shift)

ENTRY PERMIT CANCELLED

DATE/TIME ____/____ SIGNATURE _____

REASON (✓) ____ Work Complete ____ Authorized Conditions not met ____ Incident

DESCRIBE PROBLEMS DURING ENTRY AND RESOLUTION

RECLASSIFICATION TO NON-PERMIT-REQUIRED CONFINED SPACE
Describe hazard removal methods, without use of ventilation.

TING VERIFICATION SHOWN AT TIME _____ ON TEST DATA CHART ABOVE.

DATE/TIME ____/____ ENTRY SUPERVISOR SIGNATURE _____

REVIEWED BY _____ DATE _____

2-32

ATTACHMENT 6

LOCKOUT/TAGOUT FOR STEAM, WATER, AND FLUID LINES

Job: 519200 / SEAD

Device: Screen, C Busher, Undercrusher

Location: ITTR

Authorized Person: Tom G.

PREPARATION FOR SHUTDOWN

1. Determine types and shutoff location
2. Determine if there is more than one energy source
3. Determine magnitude of compressed air or gas.
4. Notify affected employees in the area that equipment will be under lockout for maintenance.
5. Disconnect/shutoff main steam, water or fluid lines to equipment.

LOCKOUT/TAGOUT

6. Lock and tag main supply (i.e. chaining through valve handle with lock) in the OFF position with a bleeder open on the load side.
7. Drain fluids from shutoff valves to equipment.
8. Repair equipment.

RETURN TO SERVICE

9. Be sure all connections are made and any unused tools and equipment are removed.
10. Remove lock if necessary to verify machine is repaired. The maintenance employee cannot leave the immediate area, while verifying the machine is repaired.
11. Remove tag from machine.
12. Notify employees in the area that the equipment is available.

Authorized Person:

Site Supervisor: Tom G

2-80

ATTACHMENT 4

LOCKOUT/TAGOUT FOR ELECTRICAL EQUIPMENT

Job: SEAD

Device: under Crusher, Screen, Crusher, Drive

Location: Thermal unit

Authorized Person: W. Parkison

PREPARATION FOR SHUTDOWN

1. Determine power type and shutoff location
2. Determine if there is more than one energy source
3. Determine magnitude of power (voltage)
4. Notify affected employees in the area that equipment will be under lockout for maintenance.
5. Shutoff power sources to machine.

LOCKOUT/TAGOUT

6. Lock and tag main power switches in the OFF position, remove fuses.
7. Verify that no power is available to the equipment using a voltmeter, if necessary.
8. Drain devices such as capacitor banks.
9. Verify that these devices have no stored energy by use of the voltmeter.
10. Repair equipment.

RETURN TO SERVICE

11. Be sure all connections are made and any unused tools and equipment are removed.
12. Remove lock if necessary to verify machine is repaired. The maintenance employee, while verifying the machine is repaired cannot leave the immediate area.
13. Remove tag from machine.
14. Notify employees in the area that the equipment is available.

Authorized Person: W Parkison

Site Supervisor:

IT Corporation is a wholly owned subsidiary of International Technology Corporation

ATTACHMENT 5

LOCKOUT/TAGOUT FOR COMPRESSED AIR AND GASES

Job: SEAD

Device: Drill

Location: Thermal unit

Authorized Person: Art Cutchfield

PREPARATION FOR SHUTDOWN

1. Determine types and shutoff location
2. Determine if there is more than one energy source
3. Determine magnitude of compressed air, gas, steam, water, or fluids.
4. Notify affected employees in the area that equipment will be locked out for maintenance.
5. Shutoff main supply to machine.

LOCKOUT/TAGOUT

6. Lock and tag main supply in the OFF position.
7. Bleed line and verify that no air or gases remain in the equipment.
8. Repair equipment.

RETURN TO SERVICE

9. Be sure all connections are made and any unused tools and equipment are removed.
10. Remove lock if necessary to verify proper operation.
12. Remove tag.
13. Notify employees in the area that the equipment is available.

Authorized Person: Art Cutchfield.

Site Supervisor:

IT Corporation is a wholly owned subsidiary of International Technology Corporation

INTERNATIONAL TECHNOLOGY CORPORATION

ENTRY PERMIT
PERMIT-REQUIRED CONFINED SPACE (PRCS)

Page __ of __

Procedure No. HS300
Revision No. 0
Date 3/4/95 03/01/93
Page 21a of 21

ATTACHMENT 3

Division/Location _____ Job No. 519200

Customer USACE Address _____

Location of Job Seneca Identity of PRCS Drier

Describe Hazards of PRCS (Chemical, Physical) _____

Chemical Introduced Into Space _____

Purpose This Permit Authorized _____

CHECKLIST	YES	DOES NOT APPLY
All lines leading to and from confined space have been blinded or disconnected	✓	
Electrical service disconnected or locked out	✓	
All grounding and bonding cables in place	✓	
All lighting, fittings, power equipment, and extension cords are explosion-proof	✓	
Ground Fault Circuit Indicator (GFCI) checked and functioning	✓	
All ignition sources have been isolate	✓	
All respiratory equipment and alarms checked and functional		✓
All safety harnesses and life lines checked	✓	
All required PPE checked and in use	✓	
All entrants are confined space trained	✓	
All entrants are trained in the use, care, and limitations of respirators and PPE	✓	
Attendant trained in emergency procedures	✓	
Attendant(s) trained in rescue procedures	✓	
Outside rescue service will be used and they have been notified of this entry		✓
Appropriate rescue equipment available and checked	✓	
Ventilation system in use and effective	✓	
Entrant(s) can achieve a gas-tight seal with respirator	✓	
Entrant(s) are not wearing contact lenses	✓	
All tests have been completed and indicate that entrance requirements have been met	✓	
Appropriate warning signs have been posted and unauthorized personnel have been excluded from the PRCS and area	✓	

IF THE ANSWER TO ANY OF THE ABOVE QUESTIONS IS NO, ENTRY IS NOT PERMITTED.

PERSONAL PROTECTIVE EQUIPMENT (Circle)

EYE/FACE
Chemical Goggles
Face Shield
Safety Glasses

EXTREMITIES
Hard Hat
Gloves (Materials Nitrile)
Hoods
Boots (Material Rubber)
Bonnets

BODY
Suit (Level C, Material _____)

RESPIRATORY
SCBA
Air Line
Egress System
Air Purifying (Cartridge [illegible])
Powered Air Purifying (Cartridge _____)

OTHER
Hearing Protection
Harness & Lifeline
Chest or Parachute

RESCUE EQUIPMENT
Mechanical Extraction Device
First Aid Kit
SCBA
Other (Specify) _____

NON-IT RESCUE TEAM
Instructions to Summon Rescue _____

COMMUNICATION
Lifeline "Tug" Signals (See HASP)
Air Powered Horn Signals (See HASP)
Other Radio

OTHER PERMITS ISSUED FOR WORK IN PRCS: _____

OTHER HAZARD CONTROL PROCEDURES OR INSTRUCTIONS: _____

IT Corporation is a wholly owned subsidiary of International Technology Corporation

Time	Percent Oxygen	Percent LEL						Value	Comments

AUTHORIZED ENTRANTS

AUTHORIZED ATTENDANTS

RESCUE PERSONNEL

[illegible]

ACCEPTABLE ENTRY CONDITIONS

1. Entry Permit Completely Filled Out
2. Oxygen between 20-22.5%
3. Combustible Gases below 10% LEL
4. Impossible Levels of Toxic Gases (Lead)

[illegible]

PRE-SAFE FOR ENTRY

DATE/TIME _____ NAME ENTRY SUPERVISOR _____ SIGNATURE _____

CURRENT ENTRY SUPERVISOR (IF DIFFERENT) _____

ENTRY PERMIT EXPIRES DATE/TIME _____ (No [illegible])

ENTRY PERMIT CANCELLED

DATE/TIME _____ SIGNATURE _____

REASON ✓ _____ Work Completed _____ Authorized Conditions not [illegible] _____ [illegible]

DESCRIBE PROBLEMS DURING ENTRY AND RESOLUTION

RECLASSIFICATION TO NON-PERMIT-REQUIRED CONFINED SPACE
Describe hazard removal (if [illegible]), without use of ventilation.

TESTING VERIFICATION SHOWN AT TIME _____ ON TEST DATA CHART ABOVE

DATE/TIME _____ ENTRY SUPERVISOR SIGNATURE _____

REVIEWED BY _____ DATE _____

4-3-1995

ATTACHMENT 4

LOCKOUT/TAGOUT FOR ELECTRICAL EQUIPMENT

Job: SEAD

Device: Screen

Location: Thermal unit

Authorized Person: Art Crutchfield

PREPARATION FOR SHUTDOWN

1. Determine power type and shutoff location
2. Determine if there is more than one energy source
3. Determine magnitude of power (voltage)
4. Notify affected employees in the area that equipment will be under lockout for maintenance.
5. Shutoff power sources to machine.

LOCKOUT/TAGOUT

6. Lock and tag main power switches in the OFF position, remove fuses.
7. Verify that no power is available to the equipment using a voltmeter, if necessary.
8. Drain devices such as capacitor banks.
9. Verify that these devices have no stored energy by use of the voltmeter.
10. Repair equipment.

RETURN TO SERVICE

11. Be sure all connections are made and any unused tools and equipment are removed.
12. Remove lock if necessary to verify machine is repaired. The maintenance employee, while verifying the machine is repaired cannot leave the immediate area.
13. Remove tag from machine.
14. Notify employees in the area that the equipment is available.

Authorized Person:

Site Supervisor:

IT Corporation is a wholly owned subsidiary of [illegible]

4-3-1995

ATTACHMENT 4

LOCKOUT/TAGOUT FOR ELECTRICAL EQUIPMENT

Job: SFAD

Device: Feed Conveyor

Location: LTTP

Authorized Person: Steve Ricci

PREPARATION FOR SHUTDOWN

1. Determine power type and shutoff location
2. Determine if there is more than one energy source
3. Determine magnitude of power (voltage)
4. Notify affected employees in the area that equipment will be under lockout for maintenance.
5. Shutoff power sources to machine.

LOCKOUT/TAGOUT

6. Lock and tag main power switches in the OFF position, remove fuses.
7. Verify that no power is available to the equipment using a voltmeter, if necessary.
8. Drain devices such as capacitor banks.
9. Verify that these devices have no stored energy by use of the voltmeter.
10. Repair equipment.

RETURN TO SERVICE

11. Be sure all connections are made and any unused tools and equipment are removed.
12. Remove lock if necessary to verify machine is repaired. The maintenance employee, while verifying the machine is repaired cannot leave the immediate area.
13. Remove tag from machine.
14. Notify employees in the area that the equipment is available.

Authorized Person: Steve Ricci

Site Supervisor:

IT Corporation is a wholly owned subsidiary of International Technology Corporation

ATTACHMENT 4

LOCKOUT/TAGOUT FOR ELECTRICAL EQUIPMENT

Job: SEAD 519200

Device: LTTA

Location: Crusher

Authorized Person: Tori Obrian

PREPARATION FOR SHUTDOWN

1. Determine power type and shutoff location
2. Determine if there is more than one energy source
3. Determine magnitude of power (voltage)
4. Notify affected employees in the area that equipment will be under lockout for maintenance.
5. Shutoff power sources to machine.

LOCKOUT/TAGOUT

6. Lock and tag main power switches in the OFF position, remove fuses.
7. Verify that no power is available to the equipment using a voltmeter, if necessary.
8. Drain devices such as capacitor banks.
9. Verify that these devices have no stored energy by use of the voltmeter.
10. Repair equipment.

RETURN TO SERVICE

11. Be sure all connections are made and any unused tools and equipment are removed.
12. Remove lock if necessary to verify machine is repaired. The maintenance employee, while verifying the machine is repaired cannot leave the immediate area.
13. Remove tag from machine.
14. Notify employees in the area that the equipment is available.

Authorized Person: Tori Obrian

Site Supervisor:

IT Corporation is a wholly owned subsidiary of International Technology Corporation

CORPORATION

Operating Area Thermal Unit Good for this date only 4/3 1995

pecific vessel or equipment Screen

Work to be done weld bypass plate

TESTS

STATE EXACT LOCATION OF TEST	TIME	PERCENT LOWER EXPLOSION LIMIT	PERCENT OXYGEN	OTHERS		INITIAL

CHECK LIST	Initial Yes	Initial Does Not Apply
Operations/plant personnel have been informed of work to be performed	✓	
All tanks/lines/vessels are disconnected, blinded, or locked out.		✓
...ipment and all attached piping has been cleaned and purged with: ...eck blank) Water ____ Steam ____ Inert gas ____ or ____		✓
Electrical service has been locked out and tagged.	✓	
All grounding/bonding wire in place.	✓	
Surrounding equipment and operations are safe for hot work.	✓	
No open vessels or lines within 35 feet of hot work area.	✓	
No combustible items within 35 feet of hot work area or covered with wetted tarpaulins.	✓	
Fire Watch has been provided by Contractor.	✓	
No flammable gases greater than 10% LEL in hot work area.	✓	
All requirements of ITCPRO 9531 for Confined Space Entry have been met and ITC Form 9531-1 has been completed and posted.		✓
If vessel contains leaded product, all requirements of ITCPRO 9531.3 have been met.	✓	

PERSONNEL PROTECTIVE EQUIPMENT

EYES
- ☐ Chemical Goggles
- ☐ Face Shield
- ☐ Safety Glasses
- ☒ Welders Mask

BODY
- ☐ Environmental Suit: ☐ PVC ☐ Bu...
- ☐ Heavy Suit: ☐ PVC ☐ Neoprene
- ☐ Light PVC Suit
- ☐ Yellow Tyvek Suit
- ☐ White Tyvek Suit

EXTREMITIES
- ☒ Hard Hat
- ☐ Gloves
- ☐ Boots ☐ PVC ☐ Neoprene
- ☐ Hoods ☐ PVC ☐ Neoprene
- ☐ Foot Coverings, Disposable

RESPIRATORY
- ☐ Self-Contained Respirator
- ☐ Hose Line Respirator
- ☐ Hose Line W/Egress
- ☒ Cartridge Respirator

Cartridge Type ____
- ☐ Dust Respirator

EQUIPMENT REQUIRED
- ☒ Fire Extinguisher
- ☐ Fire Blanket
- ☐ Charged Water Hose
- ☐ Combustible Gas Indicator

Special Instructions: ____

Co...ted by: Wayne Rawlerson (Name Printed) [signature] (Signature) 4/3/95 (Date)

____ (Manager)

ITC FORM 9571-1
CS/103-5-85

INTERNATIONAL TECHNOLOGY CORPORATION

ENTRY PERMIT
PERMIT-REQUIRED CONFINED SPACE (PRCS)

Page __ of __

Procedure No. HS300
Revision No. 0
Date 03/01/93
Page 21a of 21

ATTACHMENT 3

Division/Location SEAD Thermal
Job No. 579200
Customer SAE
Address Sonia Army Dept
Location of Job Crusher
Identity of PRCS
Describe Hazards of PRCS (Chemical, Physical)
Chemical Introduced Into Space N/A
Purpose This Permit Authorized Clean Crusher

CHECKLIST	YES	DOES NOT APPLY
All lines leading to and from confined space have been blinded or disconnected	[illegible]	
Electrical service disconnected or locked out	[illegible]	
All grounding and bonding cables in place	[illegible]	
All [illegible], fittings, power equipment, and [illegible] are explosion-proof	[illegible]	
Ground Fault Circuit Indicator (GFCI) checked and functioning	[illegible]	
All ignition sources have been isolate	[illegible]	
All respiratory equipment and alarms checked and functional	[illegible]	
All safety harnesses and life lines checked	[illegible]	
All required PPE checked and in use	[illegible]	
All entrants are confined space trained	[illegible]	
All entrants are trained in the use, care, and limitations of respirators and PPE	[illegible]	
Attendant trained in emergency procedures	[illegible]	
Attendant trained in rescue procedures	[illegible]	
Outside rescue service will be used and [illegible] been [illegible] of this entry		[illegible]
Appropriate rescue equipment available and checked	[illegible]	
Ventilation system in use and effective		[illegible]
Entrant(s) can achieve a gas-tight and [illegible] respirator	[illegible]	
Entrant(s) are not wearing contact lenses	[illegible]	
All tests have been completed and indicate that [illegible] have been met	[illegible]	
Appropriate warning signs have been posted and [illegible] have been [illegible] with the PRCS [illegible]	[illegible]	

PERSONAL PROTECTIVE EQUIPMENT (Circle)

EYE/FACE
Chemical Goggles
Face Shield
Safety Glasses

EXTREMITIES
Hard Hat
Gloves (Material [illegible])
Hoods
Boots (Material ____)
Sockets

BODY
Suit (Level ____, Material [illegible])

RESPIRATORY
SCBA
Air Line
Sprint System
Air Purifying (Cartridge [illegible])
Powered Air Purifying (Cartridge ____)

OTHER
Hearing Protection
Harness & Lifelines
Chest or Parachute

RESCUE EQUIPMENT
Mechanical Extraction Device
First Aid Kit
SCBA
Other (Specify) ____

NON-IT RESCUE TEAM
Instructions to Summon Rescue

COMMUNICATION
Lifeline "Tug" Signals (See HASP)
Air Powered Horn Signals (See HASP)
Other Police

[illegible] TO ANY OF THE ABOVE [illegible] IS NO, ENTRY IS NOT PERMITTED.

[illegible] ISSUED FOR WORK IN PRCS: ____

OTHER HAZARD CONTROL PROCEDURES OR INSTRUCTIONS: ____

2-0

INTERNATIONAL TECHNOLOGY CORPORATION

TEST DATA
(Oxygen, Flammability and Toxic Contaminants)

Page __ of __ Procedure No. [illegible]
Revision No. 0
Date 03/01/93
Page [illegible] of 21

Time	Percent Oxygen	Percent LEL	PEG	PEG	PEG	PEG	PEG	Initials	Comments
0400	2.7	0							

AUTHORIZED ENTRANTS

Tim Olson

AUTHORIZED ATTENDANTS

Steve
Tim

RESCUE PERSONNEL

Sketch the confined space, indicate location of [illegible] (indicate location(s) where tests conducted)

( ) - Manway
∞ - Ventilator
X - Test Location

ACCEPTABLE ENTRY CONDITIONS

1) Entry Permit Completely Filled Out
2) Oxygen between 20-23.5%
3) Combustible Gases Below 10% LEL
4) Permissible Levels of Toxic Gases (List)
5) Other

PROCEDURE FOR ENTRY

DATE/TIME 4/3/[illegible] NAME ENTRY SUPERVISOR Tim Cole SIGNATURE [illegible]

CURRENT ENTRY SUPERVISOR (IF DIFFERENT)

ENTRY PERMIT EXPIRES DATE/TIME 3 / 8 [illegible] (No longer than 1 shift)

ENTRY PERMIT CANCELLED

DATE/TIME ____/____ SIGNATURE

REASON (✓) ____ Work Complete ____ Authorized Conditions not met ____ Incident

DESCRIBE PROBLEMS DURING ENTRY AND RESOLUTION None

RECLASSIFICATION TO NON-PERMIT-REQUIRED CONFINED SPACE
Describe hazard removal methods, without use of verification.

TESTING VERIFICATION SHOWN AT TIME ____ ON TEST DATA CHART ABOVE.

DATE/TIME ____/____ ENTRY SUPERVISOR SIGNATURE

REVIEWED BY ____ DATE ____

2-32

INTERNATIONAL TECHNOLOGY CORPORATION

ENTRY PERMIT
PERMIT-REQUIRED CONFINED SPACE (PRCS)

Procedure No. HS300
Revision No. 0
Date 03/01/93
Page 21a of 21

ATTACHMENT 3

Division/Location SEAD
Job No. 519250
Customer BEC
Address Seneca Army Depot
Location of Job Area Chemical
Identity of PRCS
Describe Hazards of PRCS (Chemical, Physical)
Chemical Introduced Into Space N/A
Purpose This Permit Authorized

CHECKLIST	YES	DOES NOT APPLY
All ends leading to and from confined space have been blanked or disconnected	TR	
Electrical service disconnected or locked out	TR	
All grounding and bonding cables in place	TR	
All ladders, fittings, power equipment, and ventilation ducts are explosion-proof	TR	
Ground Fault Circuit Indicator (GFCI) checked and functioning	TR	
All ignition sources have been isolate	TR	
All respiratory equipment and clothing checked and functional	TR	
All safety harnesses and life lines checked	TR	
All required PPE checked and in use	TR	
All entrants are confined unless trained	TR	
All entrants are trained in the use, care, and limitations of respirators and PPE	TR	
Attendant trained in emergency procedures	TR	
Attendant(s) trained in rescue procedures	TR	
Outside rescue service will be used and they have been notified of this entry		TR
Appropriate rescue equipment available and checked	TR	
Ventilation system in use and effective		TR
Entrant(s) can achieve a gas-tight seal to an respirator	TR	
Entrant(s) are not wearing contact lenses	TR	
All tests have been completed and indicate that entrance requirements have been met	TR	
Appropriate warning signs have been posted and unauthorized personnel have been excluded from the PRCS and area	TR	

PERSONAL PROTECTIVE EQUIPMENT (Circle)

EYE/FACE
Chemical Goggles
Face Shield
Safety Glasses

EXTREMITIES
Hard Hat
Gloves (Material)
Hands
Boots (Material)
Shoes

BODY
Full Clothing (Material)

RESPIRATORY
Air Line
Supply System
Air Purifying (Cartridge)
Powered Air Purifying (Cartridge)

OTHER
Hearing Protection
Harness & Lifeline
Guard or Protective

RESCUE EQUIPMENT
Mechanical Extraction Device
First Aid Kit
SCBA
Other (Specify)

OUTSIDE RESCUE TEAM
Notification to Services Required

MONITORING
Lel Gas "Tag" Sensor (Gas Meter)
Air Powered Hum Monitor (Gas Meter)
Other Rae

IF THE ANSWER TO ANY OF THE ABOVE QUESTIONS IS NO, ENTRY IS NOT PERMITTED.

OTHER PERMITS ISSUED FOR WORK IN PRCS:

OTHER HAZARD CONTROL PROCEDURES OR INSTRUCTIONS:

Form __ of __ Procedure No. HS[illegible]
Revision No. 0
Date 03/01/93
Page 21b of 21

INTERNATIONAL TECHNOLOGY CORPORATION

TEST DATA
Oxygen, Permissibility and Toxic Contaminants

Time	Percent Oxygen	Percent LEL	PEG	PEG	PEG	PEG	PEG	Initials	Comments
0600	[illegible]	0							

AUTHORIZED ENTRANTS
Steve [illegible]

AUTHORIZED ATTENDANTS
[illegible]

RESCUE PERSONNEL

Diagram the confined space, indicate location of manway(s) and/or other, indicate location(s) where test conducted

) (- Manway
∞ - Ventilator
X - Test Location

[illegible]

ACCEPTABLE ENTRY CONDITIONS

1) Entry Permit Completely Filled Out
2) Oxygen between 20-23.5%
3) Combustible Gases Below 10% LEL
4) Permissible Levels of Toxic Gases (List)
5) Other

PROD SAFE FOR ENTRY

DATE/TIME 4/3/95 NAME ENTRY SUPERVISOR [illegible] SIGNATURE [illegible]

CURRENT ENTRY SUPERVISOR (IF DIFFERENT)

ENTRY PERMIT EXPIRES DATE/TIME ____/____ (No longer than 1 shift)

ENTRY PERMIT CANCELLED

DATE/TIME ____/____ SIGNATURE

REASON (✓) ____ Work Complete ____ Authorized Conditions not met ____ Incident

DESCRIBE PROBLEMS DURING ENTRY AND RESOLUTION
[illegible]

RECLASSIFICATION TO NON-PERMIT-REQUIRED CONFINED SPACE
Describe hazard removal methods without use of ventilation.

TESTING VERIFICATION SHOWN AT TIME ____ ON TEST DATA CHART ABOVE.

DATE/TIME ____/____ ENTRY SUPERVISOR SIGNATURE

REVIEWED BY ____ DATE ____

2-32

ATTACHMENT 6

LOCKOUT/TAGOUT FOR STEAM, WATER, AND FLUID LINES

Job: 519200

Device: Screen, Crusher

Location: KTTP

Authorized Person: Tom Garan

PREPARATION FOR SHUTDOWN

1. Determine types and shutoff location
2. Determine if there is more than one energy source
3. Determine magnitude of compressed air or gas.
4. Notify affected employees in the area that equipment will be under lockout for maintenance.
5. Disconnect/shutoff main steam, water or fluid lines to equipment.

LOCKOUT/TAGOUT

6. Lock and tag main supply (i.e. chaining through valve handle with lock) in the OFF position with a bleeder open on the load side.
7. Drain fluids from shutoff valves to equipment.
8. Repair equipment.

RETURN TO SERVICE

9. Be sure all connections are made and any unused tools and equipment are removed.
10. Remove lock if necessary to verify machine is repaired. The maintenance employee cannot leave the immediate area, while verifying the machine is repaired.
11. Remove tag from machine.
12. Notify employees in the area that the equipment is available.

Authorized Person: Tom Garan

Site Supervisor:

2-80

DATE: 4-12-1995

*Seneca Army Depot
Romulus, N.Y 14541

Page 1 of 2

INTERNATIONAL TECHNOLOGY CORPORATION

ENTRY PERMIT
PERMIT-REQUIRED CONFINED SPACE (PRCS)

Procedure No. HS300
Revision No. 0
Date 03/01/93
Page 21a of 21

ATTACHMENT 3

Construction and Remediation
Division/Location Pittsburgh Pennsylvania Job No. 519200
Customer US Army Corps of Engineers Address Omaha Nebraska
Location of Job Ash Landfill * Identity of PRCS Frac Tank # 239463
Describe Hazards of PRCS (Chemical, Physical) Slip & fall, low overhead in some sections, small amount of wet contaminated soil
Chemical Introduced Into Space N/A
Purpose This Permit Authorized high pressure water cleaning of a frac tank's interior

CHECKLIST	YES	DOES NOT APPLY
All lines leading to and from confined space have been blinded or disconnected	FMV	
Electrical service disconnected or locked out		FMV
All grounding and bonding cables in place	FMV	
All lighting, fittings, power equipment, and extension cords are explosion-proof	FMV	
Ground Fault Circuit Indicator (GFCI) checked and functioning	FMV	
All ignition sources have been isolated	FMV	
All respiratory equipment and alarms checked and functional		FMV
All safety harnesses and life lines checked REASON: NUMEROUS CROSS BARS LINE WOULD BE ENTANGLED CAUSING MORE HARM		FMV
All required PPE checked and in use	FMV	
All entrants are confined space trained	FMV	
All entrants are trained in the use, care, and limitations of respirators and PPE	FMV	
Attendant trained in emergency procedures	FMV	
Attendant(s) trained in rescue procedures		FMV
Outside rescue service will be used and they have been notified of this entry AMBULANCE ON SITE		FMV
Appropriate rescue equipment available and checked	FMV	
Ventilation system in use and effective FRAC TANK WAS EMPTIED AND VENTILATED FOR MORE THAN 24 HRS		FMV
Entrant(s) can achieve a gas-tight seal with respirator		FMV
Entrant(s) are not wearing contact lenses		FMV
All tests have been completed and indicate that entrance requirements have been met	FMV	
Appropriate warning signs have been posted and unauthorized personnel have been excluded from the PRCS and area	FMV	

PERSONAL PROTECTIVE EQUIPMENT (Circle)

EYE/FACE
Chemical Goggles
Face Shield
Safety Glasses
RESPIRATOR WITHOUT CARTRIDGES USED

EXTREMITIES
Hard Hat
Gloves (Material Nitrile)
Hoods
Boots (Material Neoprene)
Booties Tank - Inside boots

BODY
Suit (Level [illegible], Material Poly, etc)

RESPIRATORY
SCBA
Air Line
Egress System
Air Purifying (Cartridge _____)
Powered Air Purifying (Cartridge _____)

OTHER
Hearing Protection
Harness & Lifeline
Chest or Parachute

RESCUE EQUIPMENT
Mechanical Extraction Device
First Aid Kit
SCBA
Other (Specify) emergency stretcher

NON-IT RESCUE TEAM
Instructions to Summon Rescue
Dial 117
Base

COMMUNICATION
Lifeline "Tug" Signals (See HASP)
Air Powered Horn Signals (See HASP)
Other

IF THE ANSWER TO ANY OF THE ABOVE QUESTIONS IS NO, ENTRY IS NOT PERMITTED.

OTHER PERMITS ISSUED FOR WORK IN PRCS: N/A

OTHER HAZARD CONTROL PROCEDURES OR INSTRUCTIONS: N/A

2-21

DATE: 4-12-1995

Page 2 of 2

INTERNATIONAL TECHNOLOGY CORPORATION

TEST DATA
Oxygen, Flammability and Toxic Contaminant(s)

Procedure No. HS300
Revision No. 0
Date 03/01/93
Page 21b of 21

Time	Percent Oxygen	Percent LEL	PEG	PEG	PEG	PEG	PEG	Initials	HNU	Comments
09:57	21.0	0						EMV	0.0 ppm	
10:10	21.0	0						EMV	0.0 ppm	
10:25	20.9	0						EMV	0.0 ppm	
10:45	20.9	0						EMV	0.0 ppm	
11:00	20.8	0						EMV	0.0 ppm	
11:20	20.9	0						EMV	0.0 ppm	
11:40	20.8	0						EMV	0.0 ppm	
12:00	20.9	0						EMV	0.0 ppm	

AUTHORIZED ENTRANTS

Jim Johnson
Mike [illegible]
[illegible]

No Entry Conducted

AUTHORIZED ATTENDANTS

[illegible]
[illegible]

RESCUE PERSONNEL

N/A
Army [illegible]
[illegible]

Diagram the confined space. Indicate location of manways and ventilators. Indicate location(s) where tests conducted.

TANK # 232463

TOP VIEW

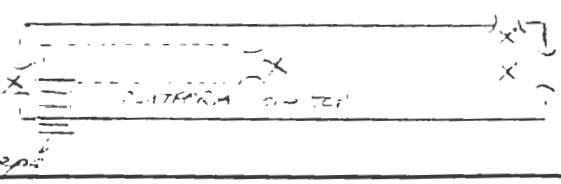

)(- Manway
▬ - Ventilator
X - Test Location

Seneca Army Depot
Romulus NY 14541

ACCEPTABLE ENTRY CONDITIONS EMV

1) Entry Permit Completely Filled Out
2) Oxygen between 20-23.5%
3) Combustible Gases Below 10% LEL
4) Permissible Levels of Toxic Gases (List)

5) Other

PRCS SAFE FOR ENTRY

DATE/TIME 4-12-1995 / 09:57 NAME ENTRY SUPERVISOR Frank M Vish Jr SIGNATURE Frank M Vish, Jr.

CURRENT ENTRY SUPERVISOR (IF DIFFERENT)

ENTRY PERMIT EXPIRES DATE/TIME 4-12-1995 / 8:00 (No longer than 1 shift)

ENTRY PERMIT CANCELLED

DATE/TIME 4-12-1995 / 12:00 SIGNATURE Frank M Vish Jr.

REASON (✓) ✓ Work Complete ____ Authorized Conditions not met ____ Incident

DESCRIBE PROBLEMS DURING ENTRY AND RESOLUTION N/A

RECLASSIFICATION TO NON-PERMIT-REQUIRED CONFINED SPACE
Describe hazard removal methods, without use of ventilation. N/A

TESTING VERIFICATION SHOWN AT TIME 09:57 ON TEST DATA CHART ABOVE.

DATE/TIME 4-12-1995 / 09:57 ENTRY SUPERVISOR SIGNATURE

REVIEWED BY Frank M Vish Jr. DATE 4-12-1995

2-32

954-5-93

* Seneca Army Depot
Romulus, N.Y 14541

DATE: 4-12-1995

Page 1 of 2

INTERNATIONAL TECHNOLOGY CORPORATION

ENTRY PERMIT
PERMIT-REQUIRED CONFINED SPACE (PRCS)

Procedure No. HS300
Revision No. 0
Date 03/01/93
Page 21a of 21

ATTACHMENT 3

Division/Location Construction and Remediation Pittsburgh, Pennsylvania Job No. 519200
Customer US Army Corps of Engineers Address Omaha, Nebraska
Location of Job* ASA Landfill Identity of PRCS Fire Tank # 239263
Describe Hazards of PRCS (Chemical, Physical) Slip, trip, fall, low overhead in some sections small amount of wet contaminated soil
Chemical Introduced into Space N/A

Purpose This Permit Authorized high pressure water cleaning of 3 fire tanks interior

CHECKLIST	YES	DOES NOT APPLY
All lines leading to and from confined space have been blinded or disconnected	FMV	
Electrical service disconnected or locked out		FMV
All grounding and bonding cables in place	FMV	
All lighting, fittings, power equipment, and extension cords are explosion-proof	FMV	
Ground Fault Circuit Indicator (GFCI) checked and functioning	FMV	
All ignition sources have been isolate	FMV	
All respiratory equipment and alarms checked and functional		FMV
All safety harnesses and life lines checked REASON WORKERS CREW BAKE-LINES CAUSE BECOME ENTANGLED		FMV
All required PPE checked and in use CAUSING MORE HARM	FMV	
All entrants are confined space trained	FMV	
All entrants are trained in the use, care, and limitations of respirators and PPE	FMV	
Attendant trained in emergency procedures	FMV	
Attendant(s) trained in rescue procedures		FMV
Outside rescue service will be used and they have been notified of this entry ON SITE PARAMEDICS		FMV
Appropriate rescue equipment available and checked	FMV	
Ventilation system in use and effective FIRE TANK PREVIOUSLY EMPTIED OF WATER AND VENTILATED FOR MORE THAN 24 HRS.		FMV
Entrant(s) can achieve a gas-tight seal with respirator		FMV
Entrant(s) are not wearing contact lenses		FMV
All tests have been completed and indicate that entrance requirements have been met	FMV	
Appropriate warning signs have been posted and unauthorized personnel have been excluded from the PRCS and area	FMV	

PERSONAL PROTECTIVE EQUIPMENT (Circle)

EYE/FACE
Chemical Goggles
Face Shield
Safety Glasses
Respirator w/ impervious seal

EXTREMITIES
Hard Hat
Gloves (Material Nitrile)
Hoods Tyvek
Boots (Material Neoprene over Tyvek)
Booties

BODY
Suit (Level Hcd, Material Polypropylene)

RESPIRATORY
SCBA
Air Line
Egress System
Air Purifying (Cartridge _____)
Powered Air Purifying (Cartridge _____)

OTHER
Hearing Protection
Harness & Lifeline
Chest or Parachute

RESCUE EQUIPMENT
Mechanical Extraction Device
First Aid Kit
SCBA
Other (Specify) Emergency shower

NON-IT RESCUE TEAM
Instructions to Summon Rescue Dial 117 Base

COMMUNICATION
Lifeline "Tug" Signals (See HASP)
Air Powered Horn Signals (See HASP)
Other

* THE ANSWER TO ANY OF THE ABOVE QUESTIONS IS NO, ENTRY IS NOT PERMITTED.

OTHER PERMITS ISSUED FOR WORK IN PRCS: N/A

OTHER HAZARD CONTROL PROCEDURES OR INSTRUCTIONS: N/A

2-21

DATE: 4-12-1995

Seneca Army Depot
Romulus, NY 14541

Page 2 of 2

INTERNATIONAL TECHNOLOGY CORPORATION

TEST DATA
Oxygen, Flammability and Toxic Contaminant(s)

Procedure No. HS300
Revision No. 0
Date 03/01/93
Page 21b of 21

Time	Percent Oxygen	Percent LEL	PEG	PEG	PEG	PEG	PEG	Initials	Comments
12:30	20.9	0						FMV	
12:55	20.8	0						FMV	
13:30	20.8	0						FMV	
13:50	20.8	0						FMV	
14:15	20.9	0						FMV	
14:45	21.0	0						FMV	
15:00	20.3	0						FMV	
15:20	20.9	0						FMV	

AUTHORIZED ENTRANTS

Mike Strickler
Frank [illegible]
[illegible]

Side entry conducted

AUTHORIZED ATTENDANTS

Frank Vish
[illegible]

RESCUE PERSONNEL

Army Base
[illegible]
[illegible]
([illegible])

Diagram the confined space. Indicate location of manways and ventilators. Indicate location(s) where tests conducted.

FRAC TANK # 239263

TOP VIEW

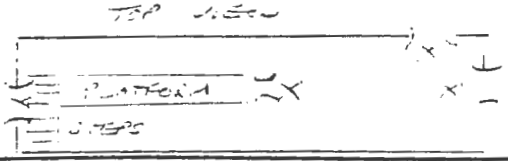

)(- Manway
▬ - Ventilator
X - Test Location

ACCEPTABLE ENTRY CONDITIONS

FMV

1) Enry Permit Completely Filled Out
2) Oxygen between 20-23.5%
3) Combustible Gases Below 10% LEL
4) Permissible Levels of Toxic Gases (List)

5) Other

PRCS SAFE FOR ENTRY

DATE/TIME 4-12-1995 / 12:30 NAME ENTRY SUPERVISOR Frank M. Vish, Jr. SIGNATURE Frank M. Vish Jr.

CURRENT ENTRY SUPERVISOR (IF DIFFERENT) 1995

ENTRY PERMIT EXPIRES DATE/TIME 4-12-1995 / 18:00 (No longer than 1 shift)

ENTRY PERMIT CANCELLED

DATE/TIME 4-12-1995 / 15:30 SIGNATURE Frank M. Vish Jr.

REASON (✓) ✓ Work Complete ____ Authorized Conditions not met ____ Incident

DESCRIBE PROBLEMS DURING ENTRY AND RESOLUTION N/A

RECLASSIFICATION TO NON-PERMIT-REQUIRED CONFINED SPACE
Describe hazard removal methods, without use of ventilation. N/A

TESTING VERIFICATION SHOWN AT TIME 12:30 ON TEST DATA CHART ABOVE.

DATE/TIME 4-12-1995 / 12:30 ENTRY SUPERVISOR SIGNATURE Frank M. Vish Jr.

REVIEWED BY Frank M. Vish, Jr. DATE 4-12-1995

2-32

INTERNATIONAL TECHNOLOGY CORPORATION

ENTRY PERMIT
PERMIT-REQUIRED CONFINED SPACE (PRCS)

Page __ of __

Procedure No. HS300
Revision No. 0
Date 04-15-95 03/01/93
Page 21a of 21

ATTACHMENT 3

Division/Location SEAD
Job No. 519200
Customer USACE
Address Romulus, N.Y
Location of Job H2O Treatment
Identity of PRCS WWTT #2
Describe Hazards of PRCS (Chemical, Physical) Waste H2O with sludge + small amount of organics, sludge + organics removed before entry to clean walls.
Chemical Introduced Into Space Waste H2O + Sludge, Frak Tank Pre cleaned with treated water to remove all sludge before entry.
Purpose This Permit Authorized Tank Cleaning (Final)

CHECKLIST	YES	DOES NOT APPLY
All lines leading to and from confined space have been blinded or disconnected	Hop	
Electrical service disconnected or locked out		Hop
All grounding and bonding cables in place		Hop
All lighting, fittings, power equipment, and extension cords are explosion-proof		Hop
Ground Fault Circuit Indicator (GFCI) checked and functioning	Hop	
All ignition sources have been isolate		Hop
All respiratory equipment and alarms checked and functional		Hop
All safety harnesses and life lines checked		Hop
All required PPE checked and in use	Hop	
All entrants are confined space trained	Hop	
All entrants are trained in the use, care, and limitations of respirators and PPE	Hop	
Attendant trained in emergency procedures	Hop	
Attendant(s) trained in rescue procedures	Hop	
Outside rescue service will be used and they have been notified of this entry		Hop
Appropriate rescue equipment available and checked		Hop
Ventilation system in use and effective	Hop	
Entrant(s) can achieve a gas-tight seal with respirator		Hop
Entrant(s) are not wearing contact lenses	Hop	
All tests have been completed and indicate that entrance requirements have been met	Hop	
Appropriate warning signs have been posted and unauthorized personnel have been excluded from the PRCS and area	Hop	

IF THE ANSWER TO ANY OF THE ABOVE QUESTIONS IS NO, ENTRY IS NOT PERMITTED.

PERSONAL PROTECTIVE EQUIPMENT (Circle)

EYE/FACE
Chemical Goggles
Face Shield
Safety Glasses

EXTREMITIES
Hard Hat
Gloves (Material Nitrile)
Hoods
Boots (Material PVC)
Booties

BODY
Suit (Level C, Material Poly)

RESPIRATORY
SCBA
Air Line
Egress System
Air Purifying (Cartridge ____)
Powered Air Purifying (Cartridge ____)

OTHER
Hearing Protection
Harness & Lifeline
Chest or Parachute
Due to internal cross members, harness would create a hazards due to the fact that it would hang up.

RESCUE EQUIPMENT
Mechanical Extraction Device
First Aid Kit
SCBA
Other (Specify) N/A

NON-IT RESCUE TEAM
Instructions to Summon Rescue N/A

COMMUNICATION
Lifeline "Tug" Signals (See HASP)
Air Powered Horn Signals (See HASP)
Other Hole watch, visual + verbal.

OTHER PERMITS ISSUED FOR WORK IN PRCS: Waste Water Treatment Frak Tank #2

OTHER HAZARD CONTROL PROCEDURES OR INSTRUCTIONS: All Manways opened, ventilated, washed + race as clean as possible before entry.

2-2

INTERNATIONAL TECHNOLOGY CORPORATION

TEST DATA
Oxygen, Flammability and Toxic Contaminant(s)

Page __ of __ Procedure No. HS300
Revision No. 0
Date 04-15-95 03/01/93
Page 21b of 21

Time	Percent Oxygen	Percent LEL	PEG	PEG	PEG	PEG	PEG	Initials	Comments
0900	21	0							
0900	21	0							
1000	21	0							
1100	21	0							
1300	21	0							
1400	21	0							
1500	21	0							
									Comfort

AUTHORIZED ENTRANTS

Frank Moore

AUTHORIZED ATTENDANTS

Scott Hawkins

RESCUE PERSONNEL

Scott Hawkins

Diagram the confined space. Indicate location of manways and ventilators. Indicate location(s) where tests conducted.

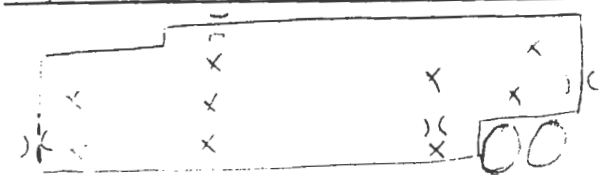

)(- Manway
= - Ventilator
X - Test Location

ACCEPTABLE ENTRY CONDITIONS

1. Entry Permit Completely Filled Out
2. Oxygen between 20-23.5%
3. Combustible Gases Below 10% LEL
4. Permissible Levels of Toxic Gases (List)

5. Other

PROS SAFE FOR ENTRY

DATE/TIME 4/15/95 0800 NAME ENTRY SUPERVISOR [illegible] SIGNATURE [illegible]

CURRENT ENTRY SUPERVISOR (IF DIFFERENT) N/A

ENTRY PERMIT EXPIRES DATE/TIME 04/15/95 1730 (No longer than 1 shift)

ENTRY PERMIT CANCELLED

DATE/TIME ____/____ SIGNATURE ____

REASON (✓) ____ Work Complete ____ Authorized Conditions not met ____ Incident

DESCRIBE PROBLEMS DURING ENTRY AND RESOLUTION

RECLASSIFICATION TO NON-PERMIT-REQUIRED CONFINED SPACE
Describe hazard removal methods, without use of ventilation.

TESTING VERIFICATION SHOWN AT TIME ____ ON TEST DATA CHART ABOVE.

DATE/TIME ____/____ ENTRY SUPERVISOR SIGNATURE ____

REVIEWED BY ____ DATE ____

2-32

INTERNATIONAL TECHNOLOGY CORPORATION

ENTRY PERMIT
PERMIT-REQUIRED CONFINED SPACE (PRCS)

Page __ of __

Procedure No. HS300
Revision No. 0
Date 04-17-95 03/01/93
Page 21a of 21

ATTACHMENT 3

Division/Location SEIAD
Job No. 519200
Customer USACE
Address Romulus N.Y.
Location of Job H2O Treatment
Identity of PRCS WWTT #4
Describe Hazards of PRCS (Chemical, Physical) Waste H2O with sludge + light organics. Tank Precleaned with Treated H2O and pumped out to remove contents.
Chemical Introduced into Space Waste H2O + sludge (mud)

Purpose This Permit Authorized Final Tank Cleaning

CHECKLIST	YES	DOES NOT APPLY
All lines leading to and from confined space have been blinded or disconnected	Hyp	
Electrical service disconnected or locked out		Hyp
All grounding and bonding cables in place		Hyp
All lighting, fittings, power equipment, and extension cords are explosion-proof		Hyp
Ground Fault Circuit Indicator (GFCI) checked and functioning	Hyp	
All ignition sources have been isolate		Hyp
All respiratory equipment and alarms checked and functional		Hyp
All safety harnesses and life lines checked		Hyp
All required PPE checked and in use	Hyp	
All entrants are confined space trained	Hyp	
All entrants are trained in the use, care, and limitations of respirators and PPE	Hyp	
Attendant trained in emergency procedures	Hyp	
Attendant(s) trained in rescue procedures	Hyp	
Outside rescue service will be used and they have been notified of this entry		Hyp
Appropriate rescue equipment available and checked		Hyp
Ventilation system in use and effective	Hyp	
Entrant(s) can achieve a gas-tight seal with respirator		Hyp
Entrant(s) are not wearing contact lenses	Hyp	
All tests have been completed and indicate that entrance requirements have been met	Hyp	
Appropriate warning signs have been posted and unauthorized personnel have been excluded from the PRCS and area	Hyp	

PERSONAL PROTECTIVE EQUIPMENT (Circle)

EYE/FACE
Chemical Goggles
Face Shield
Safety Glasses

EXTREMITIES
Hard Hat
Gloves (Material) Nitrile
Hands
Boots (Material) PVC
Booties

BODY
Suit (Level C, Material Poly)

RESPIRATORY
SCBA
Air Line
Egress System
Air Purifying (Cartridge ____)
Powered Air Purifying (Cartridge ____)

OTHER
Hearing Protection
Harness & Lifeline No Harness due to internal cross members
Chest or Parachute

RESCUE EQUIPMENT
Mechanical Extraction Device
First Aid Kit
SCBA
Other (Specify) N/A

NON-IT RESCUE TEAM
Instructions to Summon Rescue N/A

COMMUNICATION
Lifeline "Tug" Signals (See HASP)
Air Powered Horn Signals (See HASP)
Other Hole Watch Visual + Verbal

IF THE ANSWER TO ANY OF THE ABOVE QUESTIONS IS NO, ENTRY IS NOT PERMITTED.

OTHER PERMITS ISSUED FOR WORK IN PRCS: Waste Water Treatment Frak Tank #4

OTHER HAZARD CONTROL PROCEDURES OR INSTRUCTIONS: All manways opened, ventilated washed and pumped out. Tank is as clean as possible before entry permitted

2-3

INTERNATIONAL TECHNOLOGY CORPORATION

TEST DATA
Oxygen, Flammability and Toxic Contaminants

Page ___ of ___ Procedure No. HS300
Revision No. 0
Date 03/01/93
Page 21b of 21

Time	Percent Oxygen	Percent LEL	PEG	PEG	PEG	PEG	PEG	Initials	Comments
0830	21	0							
0930	21	0							
1030	21	0							
1130	21	0							
1300	21	0							
1400	21	0							
1500	21	0							
1600	21	0							

AUTHORIZED ENTRANTS

Frank Nice

AUTHORIZED ATTENDANTS

Scott Hopkins

RESCUE PERSONNEL

Scott Hopkins

Diagram the confined space, indicate location of manways and ventilators. Indicate location(s) where tests conducted.

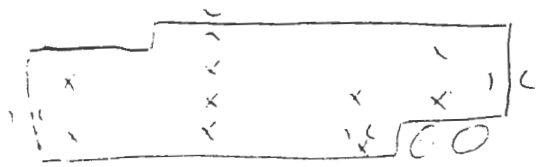

)(- Manway
= - Ventilator
X - Test Location

ACCEPTABLE ENTRY CONDITIONS

1) Entry Permit Completely Filled Out
2) Oxygen between 20-23.5%
3) Combustible Gases Below 10% LEL
4) Permissible Levels of Toxic Gases (List)
5) Other

PROS SAFE FOR ENTRY

DATE/TIME 04/17/93 / 0830 NAME ENTRY SUPERVISOR Scott Hopkins SIGNATURE Scott Hopkins

CURRENT ENTRY SUPERVISOR (IF DIFFERENT) N/A

ENTRY PERMIT EXPIRES DATE/TIME 04/17/93 / 1730 (No longer than 1 shift)

ENTRY PERMIT CANCELLED

DATE/TIME ___/___ SIGNATURE ___

REASON (✓) ___ Work Complete ___ Authorized Conditions not met ___ Incident

DESCRIBE PROBLEMS DURING ENTRY AND RESOLUTION

RECLASSIFICATION TO NON-PERMIT-REQUIRED CONFINED SPACE
Describe hazard removal methods, without use of ventilation.

TESTING VERIFICATION SHOWN AT TIME ___ ON TEST DATA CHART ABOVE.

DATE/TIME ___/___ ENTRY SUPERVISOR SIGNATURE ___

REVIEWED BY ___ DATE ___

2-32

INTERNATIONAL TECHNOLOGY CORPORATION

ENTRY PERMIT
PERMIT-REQUIRED CONFINED SPACE (PRCS)

Procedure No. HS300
Revision No. 0
Date 04-18-95 03/01/93
Page 21a of 21

ATTACHMENT 3

Division/Location SEAD
Job No. 519200
Customer USACE
Address Romulus, N.Y.
Location of Job H2O Treatment
Identity of PRCS WWTT #4
Describe Hazards of PRCS (Chemical, Physical) Light film on floor making it slippery. Cross members can get you hung up
Chemical Introduced Into Space Waste Water
Purpose This Permit Authorized Tank Cleaning

CHECKLIST	YES	DOES NOT APPLY
All lines leading to and from confined space have been blinded or disconnected	Hyp	
Electrical service disconnected or locked out		Hyp
All grounding and bonding cables in place		Hyp
All lighting, fittings, power equipment, and extension cords are explosion-proof		Hyp
Ground Fault Circuit Indicator (GFCI) checked and functioning	Hyp	
All ignition sources have been isolate		Hyp
All respiratory equipment and alarms checked and functional		Hyp
All safety harnesses and life lines checked		Hyp
All required PPE checked and in use	Hyp	
All entrants are confined space trained	Hyp	
All entrants are trained in the use, care, and limitations of respirators and PPE	Hyp	
Attendant trained in emergency procedures	Hyp	
Attendant(s) trained in rescue procedures	Hyp	~~Hyp~~
Outside rescue service will be used and they have been notified of this entry		Hyp
Appropriate rescue equipment available and checked	~~Hyp~~	Hyp
Ventilation system in use and effective		Hyp
Entrant(s) can achieve a gas-tight seal with respirator		Hyp
Entrant(s) are not wearing contact lenses	Hyp	
All tests have been completed and indicate that entrance requirements have been met	Hyp	
Appropriate warning signs have been posted and unauthorized personnel have been excluded from the PRCS and area	Hyp	

PERSONAL PROTECTIVE EQUIPMENT (Check)

EYE/FACE
Chemical Goggles
Face Shield
Safety Glasses

EXTREMITIES
Hard Hat
Gloves (Material Nitrile)
Hoods
Boots (Material PVC)
Booties

BODY
Suit (Level C, Material Poly)

RESPIRATORY
SCBA
Air-Line
Egress System
Air Purifying (Cartridge _____)
Powered Air Purifying (Cartridge _____)

OTHER
Hearing Protection
Harness & Lifeline No Harness due to cross members
Chest or Pendants

RESCUE EQUIPMENT
Mechanical Extraction Device
First Aid Kit
SCBA
Other (Specify) N/A

NON-IT RESCUE TEAM
Instructions to Summon Rescue N/A

COMMUNICATION
Lifeline "Tag" Signals (See HASP)
Air Powered Horn Signals (See HASP)
Other Hole Watch
Visual + Verbal

IF THE ANSWER TO ANY OF THE ABOVE QUESTIONS IS NO, ENTRY IS NOT PERMITTED.

OTHER PERMITS ISSUED FOR WORK IN PRCS: Waste Water Treatment Tank #4

OTHER HAZARD CONTROL PROCEDURES OR INSTRUCTIONS: Manways Open, Ventilated, Tank cleaned as good as possible before entry

2-21

954.5.07

INTERNATIONAL TECHNOLOGY CORPORATION

TEST DATA
Oxygen, Flammability and Toxic Contaminants

Page __ of __ Procedure No. HS301
Revision No. 0
Date 03/01/93
Page 21b of 21

Time	Percent Oxygen	Percent LEL	PEG	PEG	PEG	PEG	PEG	Initials	Comments
0800	21	0							
0900	21	0							
1000	21	0							
1100	21	0							
1300	21	0							
1400	21	0							
1500	21	0							
1600	21	0							Complete

AUTHORIZED ENTRANTS
Mike Stricklin

AUTHORIZED ATTENDANTS
Scott Hopkins

RESCUE PERSONNEL
Scott Hopkins

Diagram the confined space, indicate location of manways and ventilators. Indicate location(s) where tests conducted.

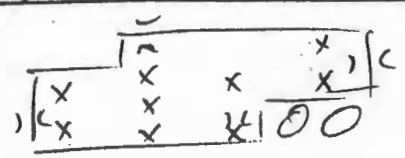

)(- Manway
∞ - Ventilator
X - Test Location

ACCEPTABLE ENTRY CONDITIONS

1) Entry Permit Completely Filled Out
2) Oxygen between 20-23.5%
3) Combustible Gases Below 10% LEL
4) Permissible Levels of Toxic Gases (List)
5) Other

PRCS SAFE FOR ENTRY
DATE/TIME 04/18/93 / 1080 NAME ENTRY SUPERVISOR S. Hopkins SIGNATURE S Hopkins
CURRENT ENTRY SUPERVISOR (IF DIFFERENT)
ENTRY PERMIT EXPIRES DATE/TIME ___/___ (No longer than 1 shift)

ENTRY PERMIT CANCELLED
DATE/TIME ___/___ SIGNATURE
REASON (✓) ___ Work Complete ___ Authorized Conditions not met ___ Incident

DESCRIBE PROBLEMS DURING ENTRY AND RESOLUTION

RECLASSIFICATION TO NON-PERMIT-REQUIRED CONFINED SPACE
Describe hazard removal methods, without use of ventilation.

TESTING VERIFICATION SHOWN AT TIME ___ ON TEST DATA CHART ABOVE.
DATE/TIME ___/___ ENTRY SUPERVISOR SIGNATURE
REVIEWED BY ___ DATE

INTERNATIONAL TECHNOLOGY CORPORATION

ENTRY PERMIT
PERMIT-REQUIRED CONFINED SPACE (PRCS)

Page ___ of ___

Procedure No. HS300
Revision No. 0
Date 04-19-95 03/01/93
Page 21a of 21

ATTACHMENT 3

Division/Location SEAD
Job No. 519200
Customer USACE
Address Romulus NY
Location of Job WATER TREATMENT
Identity of PRCS WWTT #2
Describe Hazards of PRCS (Chemical, Physical) Pressure Washer + Wet Floor

Chemical Introduced into Space WATER

Purpose This Permit Authorized Cleaning Final Rinse

CHECKLIST	YES	DOES NOT APPLY
All lines leading to and from confined space have been blinded or disconnected	Ity	
Electrical service disconnected or locked out		Ity
All grounding and bonding cables in place		Ity
All lighting, fittings, power equipment, and extension cords are explosion-proof	Ity	
Ground Fault Circuit Indicator (GFCI) checked and functioning	Ity	
All ignition sources have been isolate		Ity
All respiratory equipment and alarms checked and functional		Ity
All safety harnesses and life lines checked		Ity
All required PPE checked and in use	Ity	
All entrants are confined space trained	Ity	
All entrants are trained in the use, care, and limitations of respirators and PPE	Ity	
Attendant trained in emergency procedures	Ity	
Attendant(s) trained in rescue procedures	Ity	
Outside rescue service will be used and they have been notified of this entry		Ity
Appropriate rescue equipment available and checked		Ity
Ventilation system in use and effective	Ity	
Entrant(s) can achieve a gas-tight seal with respirator		Ity
Entrant(s) are not wearing contact lenses	Ity	
All tests have been completed and indicate that entrance requirements have been met	Ity	
Appropriate warning signs have been posted and unauthorized personnel have been excluded from the PRCS and area	Ity	

PERSONAL PROTECTIVE EQUIPMENT (Circle)

EYE/FACE
Chemical Goggles
Face Shield
Safety Glasses

EXTREMITIES
Hard Hat
Gloves (Material Vitrile)
Hoods
Boots (Material PVC)
Booties

BODY
Suit (Level C, Material Poly)

RESPIRATORY
SCBA
Air Line
Egress System
Air Purifying (Cartridge _____)
Powered Air Purifying (Cartridge _____)

OTHER
Hearing Protection
Harness & Lifeline
Chest or Parachute

RESCUE EQUIPMENT
Mechanical Extraction Device
First Aid Kit
SCBA
Other (Specify) _____

NON-IT RESCUE TEAM
Instructions to Summon Rescue

COMMUNICATION
Lifeline "Tug" Signals (See HASP)
Air Powered Horn Signals (See HASP)
Other Hole Watch
Verbal + Visual

IF THE ANSWER TO ANY OF THE ABOVE QUESTIONS IS NO, ENTRY IS NOT PERMITTED.

OTHER PERMITS ISSUED FOR WORK IN PRCS: WASTE WATER TREATMENT TANK #2

OTHER HAZARD CONTROL PROCEDURES OR INSTRUCTIONS: N/A

2-21

INTERNATIONAL TECHNOLOGY CORPORATION

TEST DATA
Oxygen, Flammability and Toxic Contaminant(s)

Page __ of __ Procedure No. HS300
Revision No. 0
Date 03/01/93
Page 21b of 21

Time	Percent Oxygen	Percent LEL	PEG	PEG	PEG	PEG	PEG	Initials	Comments
0800	21	0							
0900	21	0							
1000	21	0							
1100	21	0							
1300	21	0							
1400	21	0							
1500	21	0							
1600	21	0							

AUTHORIZED ENTRANTS
Frank Moore

AUTHORIZED ATTENDANTS
Scott Hyk

RESCUE PERSONNEL
Scott Hyk

Diagram the confined space, indicate location of manways and ventilators. Indicate location(s) where tests conducted.

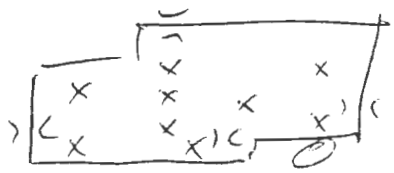

)(- Manway
= - Ventilator
X - Test Location

ACCEPTABLE ENTRY CONDITIONS

1) Entry Permit Completely Filled Out
2) Oxygen between 20-23.5%
3) Combustible Gases Below 10% LEL
4) Permissible Levels of Toxic Gases (List)

5) Other

PRCS SAFE FOR ENTRY
DATE/TIME 04-19-95 / 0800 NAME ENTRY SUPERVISOR Scott Hyking SIGNATURE

CURRENT ENTRY SUPERVISOR (IF DIFFERENT)

ENTRY PERMIT EXPIRES DATE/TIME 04-19-95 / 1730 (No longer than 1 shift)

ENTRY PERMIT CANCELLED

DATE/TIME / SIGNATURE

REASON (✓) Work Complete Authorized Conditions not met Incident

DESCRIBE PROBLEMS DURING ENTRY AND RESOLUTION

RECLASSIFICATION TO NON-PERMIT-REQUIRED CONFINED SPACE
Describe hazard removal methods, without use of ventilation.

TESTING VERIFICATION SHOWN AT TIME ON TEST DATA CHART ABOVE.

DATE/TIME / ENTRY SUPERVISOR SIGNATURE

REVIEWED BY DATE

2-32

INTERNATIONAL TECHNOLOGY CORPORATION

Page __ of __

Procedure No. HS300
Revision No. 0
Date 04-20-95 03/01/93
Page 21a of 21

ENTRY PERMIT
PERMIT-REQUIRED CONFINED SPACE (PRCS)

ATTACHMENT 3

Division/Location SEAD
Job No. 519200
Customer USACE
Address Romulus NY
Location of Job WATER TREATMENT
Identity of PRCS WWTT #2
Describe Hazards of PRCS (Chemical, Physical) Press washer + wet floor
Chemical Introduced Into Space WATER
Purpose This Permit Authorized Cleaning, Final Rinse

CHECKLIST	YES	DOES NOT APPLY
All lines leading to and from confined space have been blinded or disconnected	Hy	
Electrical service disconnected or locked out		Hy
All grounding and bonding cables in place		Hy
All lighting, fittings, power equipment, and extension cords are explosion-proof	Hy	
Ground Fault Circuit Indicator (GFCI) checked and functioning	Hy	
All ignition sources have been isolate		Hy
All respiratory equipment and alarms checked and functional		Hy
All safety harnesses and life lines checked		Hy
All required PPE checked and in use	Hy	
All entrants are confined space trained	Hy	
All entrants are trained in the use, care, and limitations of respirators and PPE	Hy	
Attendant trained in emergency procedures	Hy	
Attendant(s) trained in rescue procedures	Hy	
Outside rescue service will be used and they have been notified of this entry		Hy
Appropriate rescue equipment available and checked		Hy
Ventilation system in use and effective	Hy	
Entrant(s) can achieve a gas-tight seal with respirator		Hy
Entrant(s) are not wearing contact lenses	Hy	
All tests have been completed and indicate that entrance requirements have been met	Hy	
Appropriate warning signs have been posted and unauthorized personnel have been excluded from the PRCS and area	Hy	

PERSONAL PROTECTIVE EQUIPMENT (Circle)

EYE/FACE
Chemical Goggles
Face Shield
Safety Glasses

EXTREMITIES
Hard Hat
Gloves (Material Nitrile)
Hoods
Boots (Material PVC)
Booties

BODY
Suit (Level C, Material Tyvek)

RESPIRATORY
SCBA
Air Line
Egress System
Air Purifying (Cartridge ____)
Powered Air Purifying (Cartridge ____)

OTHER
Hearing Protection
Harness & Lifeline
Chest or Parachute

RESCUE EQUIPMENT
Mechanical Extraction Device
First Aid Kit
SCBA
Other (Specify) ____

NON-IT RESCUE TEAM
Instructions to Summon Rescue

COMMUNICATION
Lifeline "Tug" Signals (See HASP)
Air Powered Horn Signals (See HASP)
Other Hel. Watch
Verbal + Visual

THE ANSWER TO ANY OF THE ABOVE QUESTIONS IS NO, ENTRY IS NOT PERMITTED.

OTHER PERMITS ISSUED FOR WORK IN PRCS: WASTE WATER TREATMENT TANK #2

OTHER HAZARD CONTROL PROCEDURES OR INSTRUCTIONS: N/A

2-21

INTERNATIONAL TECHNOLOGY CORPORATION

TEST DATA
Oxygen, Flammability and Toxic Contaminant(s)

Page __ of __ Procedure No. HS300
Revision No. 0
Date 04-20-95 03/01/93
Page 21b of 21

Time	Percent Oxygen	Percent LEL	___ PEL	___ PEL	___ PEL	___ PEL	___ PEL	Initials	Comments
0800	21	0							
0900	21	0							
1000	21	0							
1100	21	0							
1300	21	0							
1400	21	0							
1500	21	0							
1600	21	0							

AUTHORIZED ENTRANTS
Frank Moore

AUTHORIZED ATTENDANTS
Scott H

RESCUE PERSONNEL
Scott H

Diagram the confined space, indicate location of manways and ventilators, indicate location(s) where tests conducted.

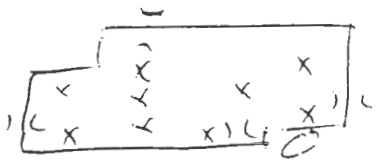

- Manway
- Ventilator
X - Test Location

ACCEPTABLE ENTRY CONDITIONS

1) Entry Permit Completely Filled Out
2) Oxygen between 20-23.5%
3) Combustible Gases Below 10% LEL
4) Permissible Levels of Toxic Gases (List)
5) Other

PRCS SAFE FOR ENTRY
DATE/TIME 04/20/95, 0800 NAME ENTRY SUPERVISOR S. Hopkins SIGNATURE S. Hopkins
CURRENT ENTRY SUPERVISOR (IF DIFFERENT) ____
ENTRY PERMIT EXPIRES DATE/TIME ____/____ (No longer than 1 shift)

ENTRY PERMIT CANCELLED
DATE/TIME ____/____ SIGNATURE ____
REASON (✓) ____ Work Complete ____ Authorized Conditions not met ____ Incident

DESCRIBE PROBLEMS DURING ENTRY AND RESOLUTION

RECLASSIFICATION TO NON-PERMIT-REQUIRED CONFINED SPACE
Describe hazard removal methods, without use of ventilation.

TESTING VERIFICATION SHOWN AT TIME ____ ON TEST DATA CHART ABOVE.
DATE/TIME ____/____ ENTRY SUPERVISOR SIGNATURE ____

REVIEWED BY ____ DATE ____

2-32

INTERNATIONAL TECHNOLOGY CORPORATION

TEST DATA
Oxygen, Flammability and Toxic Contaminant(s)

Page __ of __ Procedure No. HS300
Revision No. 0
Date 04-21-95 03/01/93
Page 21b of 21

Time	Percent Oxygen	Percent LEL	PEG	PEG	PEG	PEG	PEG	Initials	Comments
0800	21	0							
0900	21	0							
1000	21	0							
1100	21	0							
1300	21	0							
1400	21	0							
1500	21	0							
1600	21	0							

AUTHORIZED ENTRANTS
Frank Moore

AUTHORIZED ATTENDANTS
Scott Hopkins

RESCUE PERSONNEL
Scott Hopkins

Diagram the confined space, indicate location of manways and ventilators, indicate location(s) where tests conducted.

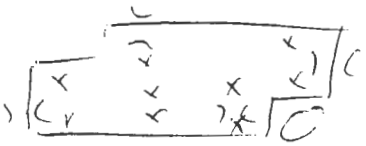

(- Manway
= - Ventilator
X - Test Location

ACCEPTABLE ENTRY CONDITIONS

1) Entry Permit Completely Filled Out
2) Oxygen between 20-23.5%
3) Combustible Gases Below 10% LEL
4) Permissible Levels of Toxic Gases (List)

5) Other

PRCS SAFE FOR ENTRY
DATE/TIME 04-21-95 / 0800 NAME ENTRY SUPERVISOR S. Hopkins SIGNATURE

CURRENT ENTRY SUPERVISOR (IF DIFFERENT)

ENTRY PERMIT EXPIRES DATE/TIME ____/____ (No longer than 1 shift)

ENTRY PERMIT CANCELLED

DATE/TIME ____/____ SIGNATURE

REASON (✓) ____ Work Complete ____ Authorized Conditions not met ____ Incident

DESCRIBE PROBLEMS DURING ENTRY AND RESOLUTION

RECLASSIFICATION TO NON-PERMIT-REQUIRED CONFINED SPACE
Describe hazard removal methods, without use of ventilation.

TESTING VERIFICATION SHOWN AT TIME ____ ON TEST DATA CHART ABOVE.

DATE/TIME ____/____ ENTRY SUPERVISOR SIGNATURE

REVIEWED BY DATE

2-32

INTERNATIONAL TECHNOLOGY CORPORATION

Page __ of __

Procedure No. HS300
Revision No. 0
Date 04-24-95 03/01/93
Page 21a of 21

ATTACHMENT 3

ENTRY PERMIT
PERMIT-REQUIRED CONFINED SPACE (PRCS)

Division/Location SEAD
Job No. 512070
Customer USACE
Address Romulus, N.Y.
Location of Job H2O Treatment
Identity of PRCS WWTF #2
Describe Hazards of PRCS (Chemical, Physical) Press Washer + Wet Floor

Chemical Introduced Into Space Water

Purpose This Permit Authorized Cleaning Final Rinse

CHECKLIST	YES	DOES NOT APPLY
All lines leading to and from confined space have been blended or disconnected	Yes	
Electrical service disconnected or locked out		Yes
All grounding and bonding cables in place		Yes
All lighting, fittings, power equipment, and extension cords are explosion-proof	Yes	
Ground Fault Circuit Indicator (GFCI) checked and functioning	Yes	
All ignition sources have been isolate		Yes
All respiratory equipment and alarms checked and functional		Yes
All safety harnesses and life lines checked		Yes
All required PPE checked and in use	Yes	
All entrants are confined space trained	Yes	
All entrants are trained in the use, care, and limitations of respirators and PPE	Yes	
Attendant trained in emergency procedures	Yes	
Attendant(s) trained in rescue procedures	Yes	
Outside rescue service will be used and they have been notified of this entry		Yes
Appropriate rescue equipment available and checked		Yes
Ventilation system in use and effective	Yes	
Entrant(s) can achieve a gas-tight seal with respirator		Yes
Entrant(s) are not wearing contact lenses	Yes	
All tests have been completed and indicate that entrance requirements have been met	Yes	
Appropriate warning signs have been posted and unauthorized personnel have been excluded from the PRCS and area	Yes	

PERSONAL PROTECTIVE EQUIPMENT (Circle)

EYE/FACE
Chemical Goggles
Face Shield
Safety Glasses

EXTREMITIES
Hard Hat
Gloves (Material Nitrile)
Hoods
Boots (Material PVC)
Booties

BODY
Suit (Level C, Material Poly)

RESPIRATORY
SCBA
Air Line
Egress System
Air Purifying (Cartridge _____)
Powered Air Purifying (Cartridge _____)

OTHER
Hearing Protection
Harness & Lifeline
Chest or Parachute

RESCUE EQUIPMENT
Mechanical Extraction Device
First Aid Kit
SCBA
Other (Specify) _____

NON-IT RESCUE TEAM
Instructions to Summon Rescue

COMMUNICATION
Lifeline "Tug" Signals (See HASP)
Air Powered Horn Signals (See HASP)
Other Hole Watch
~~Voice + Visual~~

IF THE ANSWER TO ANY OF THE ABOVE QUESTIONS IS NO, ENTRY IS NOT PERMITTED.

OTHER PERMITS ISSUED FOR WORK IN PRCS: Waste Water Treatment

OTHER HAZARD CONTROL PROCEDURES OR INSTRUCTIONS: N/A

2-21

INTERNATIONAL TECHNOLOGY CORPORATION

ENTRY PERMIT
PERMIT-REQUIRED CONFINED SPACE (PRCS)

Page __ of __

Procedure No. HS300
Revision No. 0
Date 04-19-95 03/01/93
Page 21a of 21

ATTACHMENT 3

Division/Location SEAD
Job No. 519200
Customer USACE
Address Romulus N.Y.
Location of Job H2O Treatment
Identity of PRCS WWTT #2
Describe Hazards of PRCS (Chemical, Physical) Press wash In Tank, Caution around cross members
Chemical Introduced into Space H2O

Purpose This Permit Authorized Tank Cleaning

CHECKLIST	YES	DOES NOT APPLY
All lines leading to and from confined space have been blinded or disconnected	Hyp	
Electrical service disconnected or locked out		Hyp
All grounding and bonding cables in place		Hyp
All lighting, fittings, power equipment, and extension cords are explosion-proof		Hyp
Ground Fault Circuit Indicator (GFCI) checked and functioning	Hyp	
All ignition sources have been isolate		Hyp
All respiratory equipment and alarms checked and functional		Hyp
All safety harnesses and life lines checked		Hyp
All required PPE checked and in use	Hyp	
All entrants are confined space trained	Hyp	
All entrants are trained in the use, care, and limitations of respirators and PPE	Hyp	
Attendant trained in emergency procedures	Hyp	
Attendant(s) trained in rescue procedures		Hyp
Outside rescue service will be used and they have been notified of this entry	Hyp	
Appropriate rescue equipment available and checked		Hyp
Ventilation system in use and effective		Hyp
Entrant(s) can achieve a gas-tight seal with respirator		Hyp
Entrant(s) are not wearing contact lenses	Hyp	
All tests have been completed and indicate that entrance requirements have been met	Hyp	
Appropriate warning signs have been posted and unauthorized personnel have been excluded from the PRCS and area	Hyp	

PERSONAL PROTECTIVE EQUIPMENT (Circle)

EYE/FACE
Chemical Goggles
Face Shield
Safety Glasses

EXTREMITIES
Hard Hat
Gloves (Material Nitrile)
Hoses
Boots (Material PVC)
Bootes

BODY
Suit (Level C, Material Poly)

RESPIRATORY
SCBA
Air-Line
Egress System
Air Purifying (Cartridge _____)
Powered Air Purifying (Cartridge _____)

OTHER
Hearing Protection
Harness & Lifeline No Harness Due to Cross members
Chest or Parachute

RESCUE EQUIPMENT
Mechanical Extraction Device
First Aid Kit
SCBA
Other (Specify) N/A

NON-IT RESCUE TEAM
Instructions to Summon Rescue N/A

COMMUNICATION
Lifeline "Tug" Signals (See HASP)
Air Powered Horn Signals (See HASP)
Other Hole Watch Visual & Verbal

IF THE ANSWER TO ANY OF THE ABOVE QUESTIONS IS NO, ENTRY IS NOT PERMITTED.

OTHER PERMITS ISSUED FOR WORK IN PRCS: Waste H2O Treatment Tank #2

OTHER HAZARD CONTROL PROCEDURES OR INSTRUCTIONS: Manways Open, Ventilated, Tank Pre-cleaned before entry

2-21

INTERNATIONAL TECHNOLOGY CORPORATION

Page __ of __

Procedure No. HS300
Revision No. 0
Date 04-19-95 03/01/93
Page 21a of 21

ENTRY PERMIT
PERMIT-REQUIRED CONFINED SPACE (PRCS)

ATTACHMENT 3

Division/Location SEAD
Job No. 519200
Customer USACE
Address Romulus N.Y.
Location of Job H2O Treatment
Identity of PRCS WWTT #2
Describe Hazards of PRCS (Chemical, Physical) Press Wash In Tank, Caution around cross members
Chemical Introduced into Space H2O

Purpose This Permit Authorized Tank Cleaning

CHECKLIST	YES	DOES NOT APPLY
All lines leading to and from confined space have been blinded or disconnected	Hyp	
Electrical service disconnected or locked out		Hyp
All grounding and bonding cables in place		Hyp
All lighting, fittings, power equipment, and extension cords are explosion-proof		Hyp
Ground Fault Circuit Indicator (GFCI) checked and functioning	Hyp	
All ignition sources have been isolate		Hyp
All respiratory equipment and alarms checked and functional		Hyp
All safety harnesses and life lines checked		Hyp
All required PPE checked and in use	Hyp	
All entrants are confined space trained	Hyp	
All entrants are trained in the use, care, and limitations of respirators and PPE	Hyp	
Attendant trained in emergency procedures	Hyp	
Attendant(s) trained in rescue procedures		Hyp
Outside rescue service will be used and they have been notified of this entry	Hyp	
Appropriate rescue equipment available and checked		Hyp
Ventilation system in use and effective		Hyp
Entrant(s) can achieve a gas-tight seal with respirator		Hyp
Entrant(s) are not wearing contact lenses	Hyp	
All tests have been completed and indicate that entrance requirements have been met	Hyp	
Appropriate warning signs have been posted and unauthorized personnel have been excluded from the PRCS and area	Hyp	

PERSONAL PROTECTIVE EQUIPMENT (Circle)

EYE/FACE
Chemical Goggles
Face Shield
Safety Glasses

EXTREMITIES
Hard Hat
Gloves (Material Nitrile)
Hoods
Boots (Material PVC)
Booties

BODY
Suit (Level C, Material Poly)

RESPIRATORY
SCBA
Air-Line
Egress System
Air Purifying (Cartridge _____)
Powered Air Purifying (Cartridge _____)

OTHER
Hearing Protection
Harness & Lifeline No Harness Due to Cross members
Chest or Parachute

RESCUE EQUIPMENT
Mechanical Extraction Device
First Aid Kit
SCBA
Other (Specify) N/A

NON-IT RESCUE TEAM
Instructions to Summon Rescue N/A

COMMUNICATION
Lifeline "Tug" Signals (See HASP)
Air Powered Horn Signals (See HASP)
Other Hole Watch Visual & Verbal

IF THE ANSWER TO ANY OF THE ABOVE QUESTIONS IS NO, ENTRY IS NOT PERMITTED.

OTHER PERMITS ISSUED FOR WORK IN PRCS: Waste H2O Treatment Tank #2

OTHER HAZARD CONTROL PROCEDURES OR INSTRUCTIONS: Manways Open, Ventilated. Tank Pressured before entry

2-21

INTERNATIONAL TECHNOLOGY CORPORATION

DATE: 04-25-95

DAY: Tue,

ATTENTION: Godwin Pumps

THIS IS TO CERTIFY THAT THE FOLLOWING EQUIPMENT HAS BEEN DECONTAMINATED AND IS PERMITTED TO LEAVE THE SITE FOR RETURN

NAME OF EQUIPMENT:

HL 80 Pump

2 Suct. Hoses

3 Disch Hoses

3 Ends

1 Screen

SUPERVISOR'S SIGNATURE:

HEALTH AND SAFETY'S SIGNATURE:

X Eric C. Mert

ASH LANDFILL
SENECA ARMY DEPOT
ROMULUS, N.Y. 14541

Regional Office
11499 Chester Road • Cincinnati, Ohio 45246-4012 • 513-782-4700 • FAX: 513-782-4807

IT Corporation is a wholly owned subsidiary of International Technology Corporation

INTERNATIONAL TECHNOLOGY CORPORATION

DATE: 04-25-95

DAY: Tue

ATTENTION: Goldwin Pumps

THIS IS TO CERTIFY THAT THE FOLLOWING EQUIPMENT HAS BEEN DECONTAMINATED AND IS PERMITTED TO LEAVE THE SITE FOR RETURN

NAME OF EQUIPMENT:

CD 75 Pump

SUPERVISOR'S SIGNATURE:

HEALTH AND SAFETY'S SIGNATURE:

X Eric C. Mant

ASH LANDFILL
SENECA ARMY DEPOT
ROMULUS, N.Y. 14541

Regional Office
11499 Chester Road • Cincinnati, Ohio 45246-4012 • 513-782-4700 • FAX: 513-782-4807

IT Corporation is a wholly owned subsidiary of International Technology Corporation

Seneca Army Depot
Date: 5-8-1995

INTERNATIONAL TECHNOLOGY CORPORATION

Page 1 of 2

ENTRY PERMIT
PERMIT-REQUIRED CONFINED SPACE (PRCS)

Procedure No. HS300
Revision No. 0
Date 03/01/93
Page 21a of 21

ATTACHMENT 3

Division/Location Construction and Remediation Pittsburgh Pennsylvania Job No. 519200
Customer US Army Corps of Engineers Address Omaha Nebraska
Location of Job Romulus NY 14541 Identity of PRCS Fuel Tank #239/27
Describe Hazards of PRCS (Chemical, Physical) slippery surfaces, pinch points, low overhead clearances, heavy equipment operating
Chemical Introduced Into Space none
Purpose This Permit Authorized eliminate contaminated sediment in water through a fire hose

CHECKLIST	YES	DOES NOT APPLY
All lines leading to and from confined space have been blanked or disconnected		FMV
Electrical service disconnected or locked out		FMV
All grounding and bonding cables in place		FMV
All lighting, fittings, power equipment, and extension cords are explosion-proof		FMV
Ground Fault Circuit Indicator (GFCI) checked and functioning		FMV
All ignition sources have been isolate		FMV
All respiratory equipment and alarms checked and functional		FMV
All safety harnesses and life lines checked		FMV
All required PPE checked and in use	FMV	
All entrants are confined space trained	FMV	
All entrants are trained in the use, care, and limitations of respirators and PPE	FMV	
Attendant trained in emergency procedures	FMV	
Attendant(s) trained in rescue procedures		FMV
Outside rescue service will be used and they have been notified of this entry		FMV
Appropriate rescue equipment available and checked	FMV	
Ventilation system in use and effective		FMV
Entrant(s) can achieve a gas-tight seal with respirator		FMV
Entrant(s) are not wearing contact lenses		FMV
All tests have been completed and indicate that entrance requirements have been met	FMV	
Appropriate warning signs have been posted and unauthorized personnel have been excluded from the PRCS and area	FMV	

PERSONAL PROTECTIVE EQUIPMENT (Circle)

EYE/FACE
Chemical Goggles
Face Shield
Safety Glasses

EXTREMITIES
Hard Hat
Gloves (Material) Nitrile
Hoses
Boots (Material) Neoprene
Toeplates

BODY
Suit (Level) modified D (Material) Tyvek

RESPIRATORY
SCBA
Air Line
Egress System
Air Purifying (Cartridge _____)
Powered Air Purifying (Cartridge _____)

OTHER
Hearing Protection
Harness & Lifeline
Chest or Parachute

RESCUE EQUIPMENT
Mechanical Extraction Device
First Aid Kit
SCBA
Other (Specify) Emergency stretcher

NON-IT RESCUE TEAM
Innovations to Supervise Rescue
Seneca Army Depot Base Firefighters
Dial 7-117

COMMUNICATION
Lifeline "Tug" Signals (See HASP)
Air Powered Horn Signals (See HASP)
Other _____

THE ANSWER TO ANY OF THE ABOVE QUESTIONS IS NO, ENTRY IS NOT PERMITTED.

OTHER PERMITS ISSUED FOR WORK IN PRCS: _____

OTHER HAZARD CONTROL PROCEDURES OR INSTRUCTIONS: _____

2-21

Date: 5-8-1995

FRAC TANK # [illegible]

INTERNATIONAL TECHNOLOGY CORPORATION

TEST DATA
Oxygen, Permissibility and Toxic Contaminant(s)

Page 2 of 2

Procedure No. HS300
Revision No. 0
Date 03/01/93
Page 21b of 21

Time	Percent Oxygen	Percent LEL	[illegible] PEG	PEG	PEG	PEG	PEG	Initials	Comments
[illegible]	[illegible]	[illegible]	[illegible]					[illegible]	
[illegible]	[illegible]	[illegible]	[illegible]					[illegible]	
[illegible]	[illegible]	[illegible]	[illegible]					[illegible]	
[illegible]	[illegible]	[illegible]	[illegible]					[illegible]	
[illegible]	[illegible]	[illegible]	[illegible]					[illegible]	
[illegible]	[illegible]	[illegible]	[illegible]					[illegible]	
[illegible]	[illegible]	[illegible]	[illegible]					[illegible]	
[illegible]	[illegible]	[illegible]	[illegible]					[illegible]	

AUTHORIZED ENTRANTS

[illegible]

AUTHORIZED ATTENDANTS

[illegible]

RESCUE PERSONNEL

[illegible]

Diagram the confined space. Indicate location of manways and ventilators. Indicate location(s) where tests conducted.

Top view

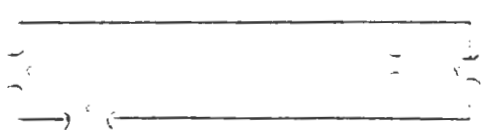

( ) - Manway
= - Ventilator
X - Test Location

ACCEPTABLE ENTRY CONDITIONS

FMV

1) Entry Permit Completely Filled Out
2) Oxygen between 20-23.5%
3) Combustible Gases Below 10% LEL
4) Permissible Levels of Toxic Gases (List)

5) Other

PRCS SAFE FOR ENTRY

DATE/TIME 5-8-1995 / 10:00 NAME ENTRY SUPERVISOR Frank M. Vish Jr. SIGNATURE Frank M. Vish Jr.

CURRENT ENTRY SUPERVISOR (IF DIFFERENT)

ENTRY PERMIT EXPIRES DATE/TIME 5-8-1995 / 17:30 (No longer than 1 shift)

ENTRY PERMIT CANCELLED

DATE/TIME 5-8-1995 / 12:00 SIGNATURE Frank M. Vish Jr.

REASON (✓) ✓ Work Complete ____ Authorized Conditions not met ____ Incident

DESCRIBE PROBLEMS DURING ENTRY AND RESOLUTION

RECLASSIFICATION TO NON-PERMIT-REQUIRED CONFINED SPACE
Describe hazard removal methods, without use of ventilation.

TESTING VERIFICATION SHOWN AT TIME 10:00 ON TEST DATA CHART ABOVE.

DATE/TIME 5-8-1995 / 10:00 ENTRY SUPERVISOR SIGNATURE Frank M. Vish Jr.

REVIEWED BY ____ DATE ____

2-32

INTERNATIONAL TECHNOLOGY CORPORATION

Date: 5-8-1995
Seneca Army Depot

Page 1 of 2

ENTRY PERMIT
PERMIT-REQUIRED CONFINED SPACE (PRCS)

Procedure No. HS300
Revision No. 0
Date 03/01/93
Page 21a of 21

ATTACHMENT 3

Division/Location Construction and Remediation Pittsburgh Pennsylvania Job No. 5192on
Customer U.S. Army Corps of Engineers Address Omaha Nebraska
Location of Job Rome, NY 13441 Identity of PRCS Frac Tank #33 & 70
Describe Hazards of PRCS (Chemical, Physical) Slippery surfaces, pinch points, low overhead obstacles, heavy equipment operating
Chemical Introduced into Space None
Purpose This Permit Authorized Eliminate control equipment via vapor treating & fine tuning

CHECKLIST	YES	DOES NOT APPLY
All lines leading to and from confined space have been blinded or disconnected		FMV
Electrical service disconnected or locked out		FMV
All grounding and bonding cables in place		FMV
All lighting, fittings, power equipment, and extension cords are explosion-proof		FMV
Ground Fault Circuit Indicator (GFCI) checked and functioning		FMV
All ignition sources have been isolate		FMV
All respiratory equipment and alarms checked and functional		FMV
safety harnesses and life lines checked		FMV
All required PPE checked and in use	FMV	
All entrants are confined space trained	FMV	
All entrants are trained in the use, care, and limitations of respirators and PPE	FMV	
Attendant trained in emergency procedures	FMV	
Attendant(s) trained in rescue procedures		FMV
Outside rescue service will be used and they have been notified of this entry		FMV
Appropriate rescue equipment available and checked	FMV	
Ventilation system in use and effective		FMV
Entrant(s) can achieve a gas-tight seal with respirator		FMV
Entrant(s) are not wearing contact lenses		FMV
All tests have been completed and indicate that entrance requirements have been met	FMV	
Appropriate warning signs have been posted and unauthorized personnel have been excluded from the PRCS and area	FMV	

PERSONAL PROTECTIVE EQUIPMENT (Circle)

EYE/FACE
Chemical Goggles
Face Shield
Safety Glasses

EXTREMITIES
Hard Hat
Gloves (Material Leather)
Hoses
Boots (Material Vibrane)
Toeses

BODY
Suit (Level Modified) Material Tyvek

RESPIRATORY
SCBA
Air Line
Egress System
Air Purifying (Cartridge _____)
Powered Air Purifying (Cartridge _____)

OTHER
Hearing Protection
Harness & Lifeline
Chest or Parachute

RESCUE EQUIPMENT
Mechanical Extraction Device
First Aid Kit
SCBA
Other (Specify) Emergency Stretcher

NON-IT RESCUE TEAM
Arrangements to Summon Rescue
Seneca Army Depot Base Firemen
Dial 7 then 11

COMMUNICATION
Lifeline "Tug" Signals (See HASP)
Air Powered Horn Signals (See HASP)
Other _____

THE ANSWER TO ANY OF THE ABOVE QUESTIONS IS NO. ENTRY IS NOT PERMITTED.

OTHER PERMITS ISSUED FOR WORK IN PRCS: _____

OTHER HAZARD CONTROL PROCEDURES OR INSTRUCTIONS: _____

2-21

Date: 5-8-1995
Frac Tank # 239070

INTERNATIONAL TECHNOLOGY CORPORATION

TEST DATA
Oxygen, Flammability and Toxic Contaminants

Procedure No. HS300
Revision No. 0
Date 03/01/93
Page 21b of 21

Time	Percent Oxygen	Percent LEL	Vapor Pressure					Initials	Comments
			PEG	PEG	PEG	PEG	PEG		
12:00	20.7	-	0 2 ppm					FMV	
12:05	20.7	-	0 5 ppm					FMV	
12:10	20.7	-	0 2 ppm					FMV	
12:15	20.7	-	0 2 ppm					FMV	
12:20	20.7	-	0 4 ppm					FMV	
12:25	20.7	-	0 5 ppm					FMV	
12:30	20.7	-	0 2 ppm					FMV	
12:35	20.7	-	0 2 ppm					FMV	

AUTHORIZED ENTRANTS

AUTHORIZED ATTENDANTS

RESCUE PERSONNEL

Diagram the confined space. Indicate location of manways and ventilators. Indicate location(s) where tests conducted.

Top View

)(- Manway
● - Ventilator
X - Test Location

ACCEPTABLE ENTRY CONDITIONS

1) Entry Permit Completely Filled Out
2) Oxygen between 20-23.5%
3) Combustible Gases Below 10% LEL
4) Permissible Levels of Toxic Gases (List)
5) Other

FMV

PRCS SAFE FOR ENTRY

DATE/TIME 5-8-1995 12:00 NAME ENTRY SUPERVISOR Frank M. Vish Jr. SIGNATURE Frank M. Vish, Jr.

CURRENT ENTRY SUPERVISOR (IF DIFFERENT)

ENTRY PERMIT EXPIRES DATE/TIME 5-8-1995 7:00 (No longer than 1 shift)

ENTRY PERMIT CANCELLED

DATE/TIME 5-8-1995 4:15 SIGNATURE Frank M. Vish, Jr.

REASON (✓) ✓ Work Complete ____ Authorized Conditions not met ____ Incident

DESCRIBE PROBLEMS DURING ENTRY AND RESOLUTION

RECLASSIFICATION TO NON-PERMIT-REQUIRED CONFINED SPACE
Describe hazard removal methods, without use of ventilation.

TESTING VERIFICATION SHOWN AT TIME 12:00 ON TEST DATA CHART ABOVE.

DATE/TIME 5-8-1995 12:00 ENTRY SUPERVISOR SIGNATURE Frank M. Vish Jr.

REVIEWED BY ____ DATE ____

2-32

Date 5-8-1995
Seneca Army Depot

Page 1 of 2

INTERNATIONAL TECHNOLOGY CORPORATION

ENTRY PERMIT
PERMIT-REQUIRED CONFINED SPACE (PRCS)

Procedure No. HS300
Revision No. 0
Date 03/01/93
Page 21a of 21

Division/Location Construction and Remediation Pittsburgh Job No. 519200
Customer U.S. Army Corps of Eng. Address Omaha Nebraska
Location of Job Romulus NY 14541 Identity of PRCS Fire Tank #237445
Describe Hazards of PRCS (Chemical, Physical) Upper surface heavy equipment operating low overhead clearances pinch points
Chemical Introduced Into Space none
Purpose This Permit Authorized to eliminate residual sediment via water (through a fire hose)

ATTACHMENT 3

CHECKLIST	YES	DOES NOT APPLY
All lines leading to and from confined space have been blinded or disconnected		FMV
Electrical service disconnected or locked out		FMV
All grounding and bonding cables in place		FMV
All lighting, fittings, power equipment, and extension cords are explosion-proof		FMV
Ground Fault Circuit Indicator (GFCI) checked and functioning		FMV
All ignition sources have been isolate		FMV
All respiratory equipment and alarms checked and functional		FMV
If safety harnesses and life lines checked		FMV
All required PPE checked and in use	FMV	
All entrants are confined space trained	FMV	
All entrants are trained in the use, care, and limitations of respirators and PPE	FMV	
Attendant trained in emergency procedures	FMV	
Attendant(s) trained in rescue procedures		FMV
Outside rescue service will be used and they have been notified of this entry		FMV
Appropriate rescue equipment available and checked	FMV	
Ventilation system in use and effective		FMV
Entrant(s) can achieve a gas-tight seal with respirator		FMV
Entrant(s) are not wearing contact lenses		FMV
All tests have been completed and indicate that entrance requirements have been met	FMV	
Appropriate warning signs have been posted and unauthorized personnel have been excluded from the PRCS and area	FMV	

PERSONAL PROTECTIVE EQUIPMENT (Circle)

EYE/FACE
Chemical Goggles
Face Shield
Safety Glasses

EXTREMITIES
Hard Hat
Gloves (Material) Nitrile
Hose
Boots (Material) Neoprene
Coveralls

BODY
Suit (Level ___, Material Tyvek)

RESPIRATORY
SCBA
Air Line
Egress System
Air Purifying (Cartridge ___)
Powered Air Purifying (Cartridge ___)

OTHER
Hearing Protection
Harness & Lifeline
Chest or Parachute

RESCUE EQUIPMENT
Mechanical Extraction Device
First Aid Kit
SCBA
Other (Specify) emergency shower

NON-IT RESCUE TEAM
Instructions to Summon Rescue

COMMUNICATION
Lifeline "Tug" Signals (See HASP)
Air Powered Horn Signals (See HASP)
Other

THE ANSWER TO ANY OF THE ABOVE QUESTIONS IS NO. ENTRY IS NOT PERMITTED.

OTHER PERMITS ISSUED FOR WORK IN PRCS:

OTHER HAZARD CONTROL PROCEDURES OR INSTRUCTIONS:

2-21

Date: 5-8-1995
Frac Tank # ~~237070~~ error
237445

Page 2 of 2

INTERNATIONAL TECHNOLOGY CORPORATION

TEST DATA
Oxygen, Flammability and Toxic Contaminant(s)

Procedure No. HS300
Revision No. 0
Date 03/01/93
Page 21b of 21

Time	Percent Oxygen	Percent LEL	HNu ~~PEG~~	~~PEG~~	~~PEG~~	~~PEG~~	~~PEG~~	Initials	Comments
14:20	20.7	0	0.5 ppm					FMV	
14:40	20.8	0	0.5 ppm					FMV	
14:55	20.8	0	0.3 ppm					FMV	
15:15	20.8	0	0.4 ppm					FMV	
15:30	20.8	0	0.4 ppm					FMV	
15:45	20.8	0	0.4 ppm					FMV	
16:00	20.8	0	0.4 ppm					FMV	

AUTHORIZED ENTRANTS

[illegible]

AUTHORIZED ATTENDANTS

Frank M. Vish Jr.

RESCUE PERSONNEL

[illegible]

Diagram the confined space. Indicate location of manways and ventilators. Indicate location(s) where tests conducted.

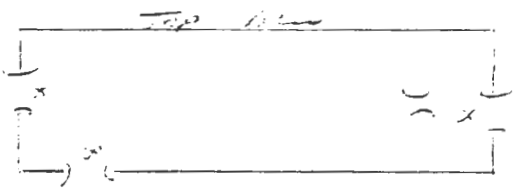

( ) - Manway
= - Ventilator
X - Test Location

ACCEPTABLE ENTRY CONDITIONS

1) Entry Permit Completely Filled Out
2) Oxygen between 20-23.5%
3) Combustible Gases Below 10% LEL
4) Permissible Levels of Toxic Gases (List)

FMV

5) Other

PRCS SAFE FOR ENTRY

DATE/TIME 5-8-1995 / 14:20 NAME ENTRY SUPERVISOR Frank M. Vish Jr. SIGNATURE Frank M. Vish Jr.

CURRENT ENTRY SUPERVISOR (IF DIFFERENT)

ENTRY PERMIT EXPIRES DATE/TIME 5-8-1995 / 17:30 (No longer than 1 shift)

ENTRY PERMIT CANCELLED

DATE/TIME 5-8-1995 / 16:30 SIGNATURE Frank M. Vish Jr.

REASON (✓) ✓ Work Complete ____ Authorized Conditions not met ____ Incident

DESCRIBE PROBLEMS DURING ENTRY AND RESOLUTION

RECLASSIFICATION TO NON-PERMIT-REQUIRED CONFINED SPACE
Describe hazard removal methods, without use of ventilation.

TESTING VERIFICATION SHOWN AT TIME 14:20 ON TEST DATA CHART ABOVE.

DATE/TIME 5-8-1995 / 14:20 ENTRY SUPERVISOR SIGNATURE Frank M. Vish Jr.

REVIEWED BY ____ DATE ____

2-32

CORPORATION

Operating Area _____ Good for this date only _____ 19 95

pecific vessel or equipment _____

Work to be done _____

TESTS

STATE EXACT LOCATION OF TEST	TIME	PERCENT LOWER EXPLOSION LIMIT	PERCENT OXYGEN	OTHERS _____ _____	INITIA

CHECK LIST

	Initial: Yes	Initial: Does Not Apply
Operations/plant personnel have been informed of work to be performed.		
All tanks/lines/valves are disconnected, blinded, or locked out.		
·ipment and all attached piping has been cleaned and purged with: ·ck blank) Water _____ Steam _____ Inert gas _____ Air _____		
Electrical service has been locked out and tagged.		
All grounding/bonding wire in place.		
Surrounding equipment and operations are safe for hot work.		
No open vessels or lines within 35 feet of hot work area.		
No combustible items within 35 feet of hot work area or covered with wetted tarpaulins.		
Fire Watch has been provided by Contractor.		
No flammable gases greater than 10% LEL in hot work area.		
All requirements of ITCPRO 9531 for Confined Space Entry have been met and ITC Form 9531-1 has been completed and posted.		
If vessel contains leaded product, all requirements of ITCPRO 9531.3 have been met.		

PERSONNEL PROTECTIVE EQUIPMENT

EYES
- ☐ Chemical Goggles
- ☐ Face Shield
- ☐ Safety Glasses
- ☐ Welders Mask

BODY
- ☐ Environmental Suit: ☐ PVC ☐ But
- ☐ Heavy Suit: ☐ PVC ☐ Neoprene
- ☐ Light PVC Suit
- ☐ Yellow Tyvek Suit
- ☐ White Tyvek Suit

EXTREMITIES
- ☐ Hard Hat
- ☐ Gloves
- ☐ Boots ☐ PVC ☐ Neoprene
- ☐ Hoods ☐ PVC ☐ Neoprene
- ☐ Foot Coverings, Disposable

RESPIRATORY
- ☐ Self-Contained Respirator
- ☐ Hose Line Respirator
- ☐ Hose Line W/Egress
- ☐ Cartridge Respirator

Cartridge Type _____
- ☐ Dust Respirator

EQUIPMENT REQUIRED
- ☐ Fire Extinguisher
- ☐ Fire Blanket
- ☐ Charged Water Hose
- ☐ Combustible Gas Indicator

Special Instructions: _____

Co· ·ted by: _____ Name Printed _____ Signature _____ Date

_____ Manager

ITC FORM 9571-1
CS/103-5-85

195-

ATTACHMENT 1

LOCKOUT TAGOUT PROCEDURE FOR SPECIFIC EQUIPMENT

EQUIPMENT _____

LOCATION _____

SERIAL NUMBER OF AVAILABLE _____

ELECTRICAL _____ VOLTAGE _____ LOCATION _____

DESCRIBE _____

AIR TYPE _____ LOCATION _____

DESCRIBE _____

GASES TYPE _____ LOCATION _____

DESCRIBE _____

STEAM TYPE _____ LOCATION _____

DESCRIBE _____

WATER _____ LOCATION _____

DESCRIBE _____

FLUIDS _____ LOCATION _____

DESCRIBE _____

HYDRAULIC _____ LOCATION _____

DESCRIBE _____

STORED ENERGY - CAPACITORS, SPRINGS, ETC. _____

DESCRIBE _____

LOG DATA AND RETURN TO SITE-SUPERVISOR

ATTACHMENT 3

LOCKOUT/TAGOUT PROCEDURE FOR SPECIFIC EQUIPMENT

EQUIPMENT _____

CAT. NUMBER AND LOCATION _____

SERIAL NUMBER IF AVAILABLE _____

ELECTRICAL _____ VOLTAGE _____ LOCATION _____

DESCRIBE _____

AIR TYPE _____ LOCATION _____

DESCRIBE _____

GASES TYPE _____ LOCATION _____

DESCRIBE _____

STEAM (TYPE) _____ LOCATION _____

DESCRIBE _____

WATER _____ LOCATION _____

DESCRIBE _____

FLUIDS _____ LOCATION _____

DESCRIBE _____

HYDRAULIC _____ LOCATION _____

DESCRIBE _____

STORED ENERGY - CAPACITORS, SPRINGS, ETC. _____

DESCRIBE _____

LOG DATA AND RETURN TO SITE SUPERVISOR

2-82

ATTACHMENT 5

LOCKOUT/TAGOUT FOR COMPRESSED AIR AND GASES

Job: _____

Device: _____

Location: _____

Authorized Person: _____

PREPARATION FOR SHUTDOWN

1. Determine types and shutoff location
2. Determine if there is more than one energy source
3. Determine magnitude of compressed air, gas, steam, water, or fluids.
4. Notify affected employees in the area that equipment will be locked out for maintenance.
5. Shutoff main supply to machine.

LOCKOUT/TAGOUT

6. Lock and tag main supply in the OFF position.
7. Bleed line and verify that no air or gases remain in the equipment.
8. Repair equipment.

RETURN TO SERVICE

9. Be sure all connections are made and any unused tools and equipment are removed.
10. Remove lock if necessary to verify proper operation.
12. Remove tag.
13. Notify employees in the area that the equipment is available.

Authorized Person:

Site Supervisor:

IT Corporation is a wholly owned subsidiary of International Technology Corporation

ATTACHMENT 8

LOCKOUT/TAGOUT PROCEDURE FOR SPECIFIC EQUIPMENT

EQUIPMENT Pugmill Conveyor, Hammer Mill + Screen

CAT. NUMBER AND LOCATION 1 TTD unit

SERIAL NUMBER (IF AVAILABLE) _____

ELECTRICAL ✓ VOLTAGE 460 LOCATION Electrical Panel

DESCRIBE _____

AIR (TYPE) _____ LOCATION _____

DESCRIBE _____

GASES (TYPE) _____ LOCATION _____

DESCRIBE _____

STEAM (TYPE) _____ LOCATION _____

DESCRIBE _____

WATER _____ LOCATION _____

DESCRIBE _____

FLUIDS _____ LOCATION _____

DESCRIBE _____

HYDRAULIC _____ LOCATION _____

DESCRIBE _____

STORED ENERGY - CAPACITORS, SPRINGS, ETC. _____

DESCRIBE _____

LOG DATA AND RETURN TO SITE-SUPERVISOR

2-82

Date: 5-9-1995

Page 1 of 2

INTERNATIONAL TECHNOLOGY CORPORATION

ENTRY PERMIT
PERMIT-REQUIRED CONFINED SPACE (PRCS)

Procedure No. HS300
Revision No. 0
Date 03/01/93
Page 21a of 21

ATTACHMENT 3

Construction and Remediation
Division/Location Pittsburgh Job No. 519200
Customer U.S. Army Corps of Engin. Address Omaha, Nebraska
Location of Job Seneca Army Depot Identity of PRCS Pug Mill Conveyor Hood
Describe Hazards of PRCS (Chemical, Physical) contaminated soil + debris, ice, pebbles etc. slip trip, fall, sharp, heavy, carbonate objects
Chemical Introduced Into Space none

Purpose This Permit Authorized to clean within the hooded section of the pug mill conveyor

Ash Landfill
Seneca Army Depot
Romulus, NY 14541

CHECKLIST	YES	DOES NOT APPLY
All lines leading to and from confined space have been blinded or disconnected	FMV	
Electrical service disconnected or locked out	FMV	
All grounding and bonding cables in place	FMV	
All lighting, fittings, power equipment, and extension cords are explosion-proof	FMV	
Ground Fault Circuit Indicator (GFCI) checked and functioning	FMV	
All ignition sources have been isolated	FMV	
All respiratory equipment and alarms checked and functional	FMV	
All safety harnesses and life lines checked GROUND LEVEL		FMV
All required PPE checked and in use	FMV	
All entrants are confined space trained	FMV	
All entrants are trained in the use, care, and limitations of respirators and PPE	FMV	
Attendant trained in emergency procedures	FMV	
Attendant(s) trained in rescue procedures		FMV
Outside rescue service will be used and they have been notified of this entry		FMV
Appropriate rescue equipment available and checked	FMV	
Ventilation system in use and effective		FMV
Entrant(s) can achieve a gas-tight seal with respirator	FMV	
Entrant(s) are not wearing contact lenses	FMV	
All tests have been completed and indicate that entrance requirements have been met	FMV	
Appropriate warning signs have been posted and unauthorized personnel have been excluded from the PRCS and area	FMV	

PERSONAL PROTECTIVE EQUIPMENT (Circle)

EYE/FACE
Chemical Goggles
Face Shield
Safety Glasses

EXTREMITIES
Hard Hat
Gloves (Material) nitrile
Hoods
Boots (Material) neoprene
Booties

BODY
Suit (Level C, Material Poly Tyvek)

RESPIRATORY
SCBA
Air Line
Egress System
Air Purifying (Cartridge 6,40 - 4)
Powered Air Purifying (Cartridge)

OTHER
Hearing Protection
Harness & Lifeline
Chest or Parachute

RESCUE EQUIPMENT
Mechanical Extraction Device
First Aid Kit
SCBA
Other (Specify) emergency stretcher

NON-IT RESCUE TEAM
Instructions to Summon Rescue
Base Paramedics 9-117

COMMUNICATION
Lifeline "Tug" Signals (See HASP)
Air Powered Horn Signals (See HASP)
Other

IF THE ANSWER TO ANY OF THE ABOVE QUESTIONS IS NO, ENTRY IS NOT PERMITTED.

OTHER PERMITS ISSUED FOR WORK IN PRCS:

OTHER HAZARD CONTROL PROCEDURES OR INSTRUCTIONS:

2-21

Ash Landfill Depot, Romulus, NY 14541
Seneca Army
Pug Mill Conveyor Hood
Date: 5-9-1995

Page 2 of 2

INTERNATIONAL TECHNOLOGY CORPORATION

TEST DATA
Oxygen, Flammability and Toxic Contaminant(s)

Procedure No. HS300
Revision No. 0
Date 03/01/93
Page 21b of 21

Time	Percent Oxygen	Percent LEL	PEG	PEG	PEG	PEG	PEG	Initials	Comments
10:00	20.9	0						FMV	
10:30	20.9	0						FMV	
11:00	21.0	0						FMV	
11:30	20.9	0						FMV	
11:45	21.0	0						FMV	
12:15	21.0	0						FMV	
12:30	20.9	0						FMV	

AUTHORIZED ENTRANTS

Bill Williams

AUTHORIZED ATTENDANTS

Brian Collis

RESCUE PERSONNEL

Base Paramedics
DM 7 then
117

Diagram the confined space, indicate location of manways and ventilators. Indicate location(s) where tests conducted.

SIDE VIEW

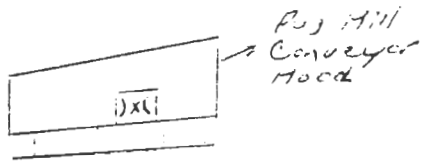

)(- Manway
▬ - Ventilator
X - Test Location

ACCEPTABLE ENTRY CONDITIONS

1) Entry Permit Completely Filled Out
2) Oxygen between 20-23.5%
3) Combustible Gases Below 10% LEL
4) Permissible Levels of Toxic Gases (List)

FMV

5) Other

PRCS SAFE FOR ENTRY

DATE/TIME 5-9-1995 / 10:00 NAME ENTRY SUPERVISOR Frank M. Vish Jr. SIGNATURE Frank M. Vish Jr.

CURRENT ENTRY SUPERVISOR (IF DIFFERENT)

ENTRY PERMIT EXPIRES DATE/TIME 5-9-1995 / 7:30 (No longer than 1 shift)

ENTRY PERMIT CANCELLED

DATE/TIME 5-9-1995 / 12:30 SIGNATURE Frank M. Vish Jr.

REASON (✓) ✓ Work Complete ____ Authorized Conditions not met ____ Incident

DESCRIBE PROBLEMS DURING ENTRY AND RESOLUTION

RECLASSIFICATION TO NON-PERMIT-REQUIRED CONFINED SPACE
Describe hazard removal methods, without use of ventilation.

TESTING VERIFICATION SHOWN AT TIME 10:00 ON TEST DATA CHART ABOVE.

DATE/TIME 5-9-1995 / 10:00 ENTRY SUPERVISOR SIGNATURE Frank M. Vish Jr.

REVIEWED BY ____ DATE ____

2-32

CORPORATION

Operating Area LTTD unit Good for this date only 5-9 1995

Specific vessel or equipment Screen

Work to be done Weld By Pass Chute Door up

TESTS

STATE EXACT LOCATION OF TEST	TIME	PERCENT LOWER EXPLOSION LIMIT	PERCENT OXYGEN	OTHERS		INITI
	13:30	2	20.9			
	14:00	0	21.0			
	14:30	0	20.9			

CHECK LIST

	Initial Yes	Initial Does Not Apply
Operations/plant personnel have been informed of work to be performed	✓	
All tanks/lines/valves are disconnected, blinded, or locked out.	✓	
uipment and all attached piping has been cleaned and purged with: eck blank) Water____ Steam____ Inert gas____ Air	None	
Electrical service has been locked out and tagged.	✓	
All grounding/bonding wire in place.	✓	
Surrounding equipment and operations are safe for hot work.	✓	
No open vessels or lines within 35 feet of hot work area.	✓	
No combustible items within 35 feet of hot work area or covered with wetted tarpaulins.	✓	
Fire Watch has been provided by Contractor.	✓	
No flammable gases greater than 10% LEL in hot work area.	✓	
All requirements of ITCPRO 9531 for Confined Space Entry have been met and ITC Form 9531-1 has been completed and posted.	✓	
If vessel contains leaded product, all requirements of ITCPRO 9531.3 have been met.	None	

PERSONNEL PROTECTIVE EQUIPMEN

EYES
- ☐ Chemical Goggles
- ☐ Face Shield
- ☐ Safety Glasses
- ☑ Welders Mask

BODY
- ☑ Environmental Suit: ☐ PVC ☐ Bu
- ☐ Heavy Suit: ☐ PVC ☐ Neoprene
- ☐ Light PVC Suit
- ☑ Yellow Tyvek Suit
- ☐ White Tyvek Suit

EXTREMITIES
- ☑ Hard Hat
- ☑ Gloves
- ☑ Boots ☐ PVC ☐ Neoprene
- ☐ Hoods ☐ PVC ☐ Neoprene
- ☑ Foot Coverings, Disposable

RESPIRATORY
- ☐ Self-Contained Respirator
- ☐ Hose Line Respirator
- ☐ Hose Line W/Egress
- ☐ Cartridge Respirator

Cartridge Type ____
- ☐ Dust Respirator

EQUIPMENT REQUIRED
- ☑ Fire Extinguisher
- ☐ Fire Blanket
- ☐ Charged Water Hose
- ☐ Combustible Gas Indicator

Special Instructions:

Co[illegible]leted by: [signature] Name Printed [signature] Signature 5-9-95 Date

Manager

ITC FORM 9571-1
CS/103-5-85

5-9-1995

ATTACHMENT 5

LOCKOUT/TAGOUT FOR COMPRESSED AIR AND GASES

Job: 519200

Device: Screen-Hammer-Mill

Location: L.T.T.D.

Authorized Person: Tim Cook

PREPARATION FOR SHUTDOWN

1. Determine types and shutoff location
2. Determine if there is more than one energy source
3. Determine magnitude of compressed air, gas, steam, water, or fluids.
4. Notify affected employees in the area that equipment will be locked out for maintenance.
5. Shutoff main supply to machine.

LOCKOUT/TAGOUT

6. Lock and tag main supply in the OFF position.
7. Bleed line and verify that no air or gases remain in the equipment.
8. Repair equipment.

RETURN TO SERVICE

9. Be sure all connections are made and any unused tools and equipment are removed.
10. Remove lock if necessary to verify proper operation.
12. Remove tag.
13. Notify employees in the area that the equipment is available.

Authorized Person:

Tim Cook

Site Supervisor:

Tim Cook

IT Corporation is a wholly owned subsidiary of International Technology Corporation

Date: 5-10-1995

Page 1 of 2

INTERNATIONAL TECHNOLOGY CORPORATION

ENTRY PERMIT
PERMIT-REQUIRED CONFINED SPACE (PRCS)

Procedure No. HS300
Revision No. 0
Date 03/01/93
Page 21a of 21

ATTACHMENT 3

Division/Location C and R Pittsburgh PA Job No. 519260
Customer U.S. Army Corps of Engineers Address Omaha Nebraska
Location of Job Seneca Army Depot Identity of PRCS Frac Tank # 239262
Describe Hazards of PRCS (Chemical, Physical) slippery surfaces, pinch points, low overhead clearances, heavy equipment operating
Chemical Introduced into Space none
Purpose This Permit Authorized eliminate retained sediment via water (through a fire hose)

CHECKLIST	YES	DOES NOT APPLY
All lines leading to and from confined space have been blinded or disconnected		FMV
Electrical service disconnected or locked out		FMV
All grounding and bonding cables in place		FMV
All lighting, fittings, power equipment, and extension cords are explosion-proof		FMV
Ground Fault Circuit Indicator (GFCI) checked and functioning		FMV
All ignition sources have been isolate		FMV
All respiratory equipment and alarms checked and functional		FMV
All safety harnesses and life lines checked		FMV
All required PPE checked and in use	FMV	
All entrants are confined space trained	FMV.	
All entrants are trained in the use, care, and limitations of respirators and PPE	FMV.	
Attendant trained in emergency procedures	FMV	
Attendant(s) trained in rescue procedures		FMV.
Outside rescue service will be used and they have been notified of this entry		FMV.
Appropriate rescue equipment available and checked	FMV.	
Ventilation system in use and effective		FMV.
Entrant(s) can achieve a gas-tight seal with respirator		FMV.
Entrant(s) are not wearing contact lenses		FMV.
All tests have been completed and indicate that entrance requirements have been met	FMV.	
Appropriate warning signs have been posted and unauthorized personnel have been excluded from the PRCS and area	FMV.	

PERSONAL PROTECTIVE EQUIPMENT (Circle)

EYE/FACE
Chemical Goggles
Face Shield
Safety Glasses

EXTREMITIES
Hard Hat
Gloves (Material ____)
Hoods
Boots (Material ____)
Bootees

BODY
Suit (Level ____, Material ____)

RESPIRATORY
SCBA
Air Line
Egress System
Air Purifying (Cartridge ____)
Powered Air Purifying (Cartridge ____)

OTHER
Hearing Protection
Harness & Lifeline
Chest or Parachute

RESCUE EQUIPMENT
Mechanical Extraction Device
First Aid Kit
SCBA
Other (Specify) Emergency Stretcher

NON-IT RESCUE TEAM
Instructions to Supervisor Rescue: Base Paramedics Call 911 then call ...

COMMUNICATION
Lifeline "Tug" Signals (See HASP)
Air Powered Horn Signals (See HASP)
Other ____

Seneca Army Depot
Romulus, New York
1995

IF THE ANSWER TO ANY OF THE ABOVE QUESTIONS IS NO, ENTRY IS NOT PERMITTED.

OTHER PERMITS ISSUED FOR WORK IN PRCS: ____

OTHER HAZARD CONTROL PROCEDURES OR INSTRUCTIONS: ____

2-0

Date: 5-10-1995

Frac Tank # 239263

Page 2 of 2

Procedure No. HS300
Revision No. 0
Date 03/01/93
Page 21b of 21

INTERNATIONAL TECHNOLOGY CORPORATION

TEST DATA
Oxygen, Flammability and Toxic Contaminant(s)

Time	Percent Oxygen	Percent LEL	PEG	PEG	PEG	PEG	PEG	Initials	HNU P.D	Comments
08:30	20.8							FMV	0.5 ppm	
08:45	20.8							FMV	0.2 ppm	
09:00	20.8							FMV	0.0 ppm	
09:15	20.8							FMV	0.0 ppm	
09:30	20.8							FMV	0.5 ppm	
09:45	20.8							FMV	0.1 ppm	
10:00	20.8							FMV	0.3 ppm	

AUTHORIZED ENTRANTS

Patricia Wright

AUTHORIZED ATTENDANTS

Frank M Vish Jr

RESCUE PERSONNEL

Seneca Army Depot Paramedics Div 7 117

Diagram the confined space, indicate location of manways and ventilators. Indicate location(s) where tests conducted.

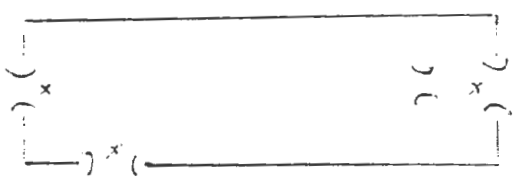

Top View

) (- Manway

▬ - Ventilator

X - Test Location

ACCEPTABLE ENTRY CONDITIONS

1) Entry Permit Completely Filled Out
2) Oxygen between 20-23.5%
3) Combustible Gases Below 10% LEL
4) Permissible Levels of Toxic Gases (List)

FMV

5) Other

PRCS SAFE FOR ENTRY

DATE/TIME 5-10-1995 / 08:30 NAME ENTRY SUPERVISOR Frank M. Vish Jr SIGNATURE Frank M. Vish Jr

CURRENT ENTRY SUPERVISOR (IF DIFFERENT)

ENTRY PERMIT EXPIRES DATE/TIME 5-10-1995 / 11:30 (No longer than 1 shift)

ENTRY PERMIT CANCELLED

DATE/TIME 5-10-1995 / 10:10 SIGNATURE Frank M. Vish Jr

REASON (✓) ✓ Work Complete ____ Authorized Conditions not met ____ Incident

DESCRIBE PROBLEMS DURING ENTRY AND RESOLUTION

RECLASSIFICATION TO NON-PERMIT-REQUIRED CONFINED SPACE
Describe hazard removal methods, without use of ventilation.

TESTING VERIFICATION SHOWN AT TIME 08:30 ON TEST DATA CHART ABOVE.

DATE/TIME 5-10-1995 / 08:30 ENTRY SUPERVISOR SIGNATURE Frank M Vish Jr

REVIEWED BY ____ DATE ____

2-32

Date: 5-10-1995

Page 1 of 2

INTERNATIONAL TECHNOLOGY CORPORATION

ENTRY PERMIT
PERMIT-REQUIRED CONFINED SPACE (PRCS)

Procedure No. HS300
Revision No. 0
Date 03/01/93
Page 21a of 21

ATTACHMENT 3

Division/Location C and R. Pittsburgh PA Job No. 519200
Customer U.S. Army Corps of Engineers Address Omaha, Nebraska
Location of Job Seneca Army Depot Identity of PRCS Frac Tank # 239463
Describe Hazards of PRCS (Chemical, Physical) Slippery surfaces pinch points low overhead clearances, heavy equip. operating
Chemical Introduced Into Space none

Purpose This Permit Authorized eliminate residual sediment via water (through a fire hose)

Ash Landfill
Seneca Army Depot
Romulus, N.Y.
14541

CHECKLIST	YES	DOES NOT APPLY
All lines leading to and from confined space have been blinded or disconnected		FMV
Electrical service disconnected or locked out		FMV
All grounding and bonding cables in place		FMV
All lighting, fittings, power equipment, and extension cords are explosion-proof		FMV
Ground Fault Circuit Indicator (GFCI) checked and functioning		FMV
All ignition sources have been isolated		FMV
All respiratory equipment and alarms checked and functional		FMV
All safety harnesses and life lines checked		FMV
All required PPE checked and in use	FMV	
All entrants are confined space trained	FMV	
All entrants are trained in the use, care, and limitations of respirators and PPE	FMV	
Attendant trained in emergency procedures	FMV	
Attendant(s) trained in rescue procedures		FMV
Outside rescue service will be used and they have been notified of this entry		FMV
Appropriate rescue equipment available and checked	FMV	
Ventilation system in use and effective		FMV
Entrant(s) can achieve a gas-tight seal with respirator		FMV
Entrant(s) are not wearing contact lenses		FMV
All tests have been completed and indicate that entrance requirements have been met	FMV	
Appropriate warning signs have been posted and unauthorized personnel have been excluded from the PRCS and area	FMV	

PERSONAL PROTECTIVE EQUIPMENT (Circle)

EYE/FACE
Chemical Goggles
Face Shield
Safety Glasses

EXTREMITIES
Hard Hat
Gloves (Material nitrile
Hoods
Boots (Material neoprene
Booties

BODY Modified D
Suit (Level ____, Material Saranax

RESPIRATORY
SCBA
Air Line
Egress System
Air Purifying (Cartridge ____)
Powered Air Purifying (Cartridge ____)

OTHER
Hearing Protection
Harness & Lifeline
Chest or Parachute

RESCUE EQUIPMENT
Mechanical Extraction Device
First Aid Kit
SCBA
Other (Specify) emergency stretcher

NON-IT RESCUE TEAM
Instructions to Summon Rescue
Base Paramedics
Dial 9 then 1 ft

COMMUNICATION
Lifeline "Tug" Signals (See HASP)
Air Powered Horn Signals (See HASP)
Other ____

IF THE ANSWER TO ANY OF THE ABOVE QUESTIONS IS NO, ENTRY IS NOT PERMITTED.

OTHER PERMITS ISSUED FOR WORK IN PRCS: ____

OTHER HAZARD CONTROL PROCEDURES OR INSTRUCTIONS: ____

2-01

Date: 5-10-1995

Frac Tank # 239468

Page 2 of 2

INTERNATIONAL TECHNOLOGY CORPORATION

TEST DATA
Oxygen, Flammability and Toxic Contaminant(s)

Procedure No. HS300
Revision No. 0
Date 03/01/93
Page 21b of 21

Time	Percent Oxygen	Percent LEL	PEG	PEG	PEG	PEG	PEG	Initials	HNU PID	Comments
10:30	20.8	0							0.3 ppm	
10:45	20.9	0							0.3 ppm	
11:00	20.8	0							0.6 ppm	
11:15	20.9	0							0.4 ppm	
11:30	21.0	0							0.5 ppm	
11:45	21.0	0							0.5 ppm	
12:00	20.8	0							0.5 ppm	
12:15	20.9	0							0.5 ppm	

AUTHORIZED ENTRANTS

Patricia Wright

AUTHORIZED ATTENDANTS

Frank M. Vish Jr.

RESCUE PERSONNEL

Diagram the confined space. Indicate location of manways and ventilators. Indicate location(s) where tests conducted.

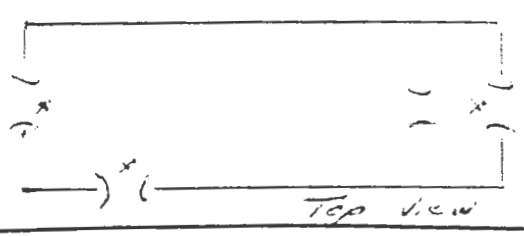

( ) - Manway
● - Ventilator
X - Test Location

ACCEPTABLE ENTRY CONDITIONS

1) Entry Permit Completely Filled Out
2) Oxygen between 20-23.5%
3) Combustible Gases Below 10% LEL
4) Permissible Levels of Toxic Gases (List)

FMV

5) Other

PRCS SAFE FOR ENTRY

DATE/TIME 5/10/1995 10:30 NAME ENTRY SUPERVISOR Frank M. Vish Jr. SIGNATURE Frank M. Vish Jr.

CURRENT ENTRY SUPERVISOR (IF DIFFERENT)

ENTRY PERMIT EXPIRES DATE/TIME 5-10-1995 11:30 (No longer than 1 shift)

ENTRY PERMIT CANCELLED

DATE/TIME 5-10-1995 12:25 SIGNATURE Frank M. Vish Jr.

REASON (✓) _____ Work Complete _____ Authorized Conditions not met _____ Incident

DESCRIBE PROBLEMS DURING ENTRY AND RESOLUTION

RECLASSIFICATION TO NON-PERMIT-REQUIRED CONFINED SPACE
Describe hazard removal methods, without use of ventilation.

TESTING VERIFICATION SHOWN AT TIME 10:30 ON TEST DATA CHART ABOVE.

DATE/TIME 5-10-1995 10:30 ENTRY SUPERVISOR SIGNATURE Frank M. Vish Jr.

REVIEWED BY _____ DATE _____

2-3

IT Corporation is a wholly owned ...

ATTACHMENT 8

LOCKOUT/TAGOUT PROCEDURE FOR SPECIFIC EQUIPMENT

EQUIPMENT Screen & Pugmill

CAT. NUMBER AND LOCATION _____

SERIAL NUMBER (IF AVAILABLE) _____

ELECTRICAL ✓ VOLTAGE 460 LOCATION LTU

DESCRIBE _____

AIR (TYPE) _____ LOCATION _____

DESCRIBE _____

GASES (TYPE) _____ LOCATION _____

DESCRIBE _____

STEAM (TYPE) _____ LOCATION _____

DESCRIBE _____

WATER _____ LOCATION _____

DESCRIBE _____

FLUIDS _____ LOCATION _____

DESCRIBE _____

HYDRAULIC _____ LOCATION _____

DESCRIBE _____

STORED ENERGY - CAPACITORS, SPRINGS, ETC. _____

DESCRIBE _____

LOG DATA AND RETURN TO SITE-SUPERVISOR

2-82

Date: 5-11-1995

Page 1 of 2

INTERNATIONAL TECHNOLOGY CORPORATION

ENTRY PERMIT
PERMIT-REQUIRED CONFINED SPACE (PRCS)

Procedure No. HS300
Revision No. 0
Date 03/01/93
Page 21a of 21

ATTACHMENT 3

Division/Location C and R Pittsburgh Job No. 519200
Customer U.S Army Corps of Engineers Address Omaha, Nebraska
Location of Job Seneca Army Depot Identity of PRCS Frac Tank #237149
Describe Hazards of PRCS (Chemical, Physical) Slippery Surfaces, pinch points, heavy equipment operating, low overhead electric
Chemical Introduced into Space none

Purpose This Permit Authorized To eliminate residual sediment via water (through a fine hose)

Ash Landfill
Seneca Army Depot
Romulus, NY
14541

CHECKLIST	YES	DOES NOT APPLY
All lines leading to and from confined space have been blinded or disconnected		FMV
Electrical service disconnected or locked out		FMV
All grounding and bonding cables in place		FMV
All lighting, fittings, power equipment, and extension cords are explosion-proof		FMV
Ground Fault Circuit Indicator (GFCI) checked and functioning		FMV
All ignition sources have been isolated		FMV
All respiratory equipment and alarms checked and functional		FMV
All safety harnesses and life lines checked		FMV
All required PPE checked and in use	FMV	
All entrants are confined space trained	FMV	
All entrants are trained in the use, care, and limitations of respirators and PPE	FMV	
Attendant trained in emergency procedures	FMV	
Attendant(s) trained in rescue procedures		FMV
Outside rescue service will be used and they have been notified of this entry		FMV
Appropriate rescue equipment available and checked	FMV	
Ventilation system in use and effective		FMV
Entrant(s) can achieve a gas-tight seal with respirator	error ~~FMV~~	FMV
Entrant(s) are not wearing contact lenses		FMV
All tests have been completed and indicate that entrance requirements have been met	FMV	
Appropriate warning signs have been posted and unauthorized personnel have been excluded from the PRCS and area	FMV	

PERSONAL PROTECTIVE EQUIPMENT (Circle)

EYE/FACE
Chemical Goggles
Face Shield
Safety Glasses

EXTREMITIES
Hard Hat
Gloves (Material Nitrile)
Hoods
Boots (Material Neoprene)
Booties

BODY
Suit (Level ___, Material Tyvek)

RESPIRATORY
SCBA
Air Line
Egress System
Air Purifying (Cartridge ___)
Powered Air Purifying (Cartridge ___)

OTHER
Hearing Protection
Harness & Lifeline
Chest or Parachute

RESCUE EQUIPMENT
Mechanical Extraction Device
First Aid Kit
SCBA
Other (Specify) emergency stretcher

NON-IT RESCUE TEAM
Instructions to Summon Rescue
Base Paramedics Dial 7 then 119

COMMUNICATION
Lifeline "Tug" Signals (See HASP)
Air Powered Horn Signals (See HASP)
Other

IF THE ANSWER TO ANY OF THE ABOVE QUESTIONS IS NO, ENTRY IS NOT PERMITTED.

OTHER PERMITS ISSUED FOR WORK IN PRCS:

OTHER HAZARD CONTROL PROCEDURES OR INSTRUCTIONS:

2-21

Date : 5-11-1995

Page 2 of 2

INTERNATIONAL TECHNOLOGY CORPORATION

TEST DATA
Oxygen, Flammability and Toxic Contaminants

Procedure No. HS300
Revision No. 0
Date 03/01/93
Page 21b of 21

Ash Landfill
Seneca Army Depot
Romulus, N.Y.
14541

Time	Percent Oxygen	Percent LEL	XEG	XEG	XEG	XEG	XEG	Initials	HNU PID DL/01	Comments
08:30	20.7	0							0.0 ppm	
08:50	20.8	0							0.5	
09:15	20.8	0							0.5	
09:30	21.0	0							0.7	
09:45	20.7	0							0.7	
10:00	20.8	0							0.7	
10:15	20.9	0							0.2	
10:30	20.8	0							0.1	

AUTHORIZED ENTRANTS
Patricia Wright

AUTHORIZED ATTENDANTS
Frank M. Visi Jr

RESCUE PERSONNEL
Dale Fromenchio
Sid Thompson

Diagram the confined space, indicate location of manways and ventilators, indicate location(s) where tests conducted.

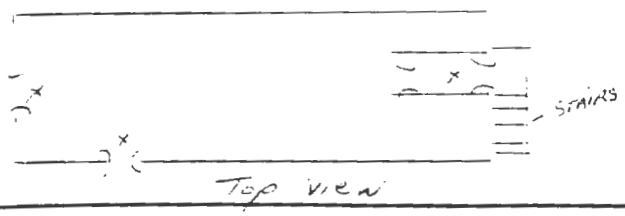

( ) - Manway
■ - Ventilator
X - Test Location

ACCEPTABLE ENTRY CONDITIONS

1) Entry Permit Completely Filled Out
2) Oxygen between 20-23.5%
3) Combustible Gases Below 10% LEL
4) Permissible Levels of Toxic Gases (List)

FMV

5) Other

PRCS SAFE FOR ENTRY
DATE/TIME 5-11-1995 08:30 NAME ENTRY SUPERVISOR Frank M. Visi Jr SIGNATURE Frank M. Visi Jr.
CURRENT ENTRY SUPERVISOR (IF DIFFERENT)
ENTRY PERMIT EXPIRES DATE/TIME 5-11-1995 17:30 (No longer than 1 shift)

ENTRY PERMIT CANCELLED
DATE/TIME 5-11-1995 10:45 SIGNATURE Frank M. Visi Jr.
REASON (✓) ✓ Work Complete ____ Authorized Conditions not met ____ Incident

DESCRIBE PROBLEMS DURING ENTRY AND RESOLUTION

RECLASSIFICATION TO NON-PERMIT-REQUIRED CONFINED SPACE
Describe hazard removal methods, without use of ventilation.

TESTING VERIFICATION SHOWN AT TIME 08:30 ON TEST DATA CHART ABOVE.
DATE/TIME 5-11-1995 08:30 ENTRY SUPERVISOR SIGNATURE Frank M. Visi Jr.

REVIEWED BY ____ DATE ____

2-32

CORPORATION

Operating Area LTTD Unit Good for this date only 5-12-95 19

pecific vessel or equipment Drier

Work to be done Cutting torch

TESTS

STATE EXACT LOCATION OF TEST	TIME	PERCENT LOWER EXPLOSION LIMIT	PERCENT OXYGEN	OTHERS		INITIA
Outside of Drier	1400	0	21.0			

CHECK LIST

	Initial Yes	Initial Does Not Apply
Operations/plant personnel have been informed of work to be performed	✓	
All tanks/lines/valves are disconnected, blinded, or locked out.	✓	
ipment and all attached piping has been cleaned and purged with: eck blank) Water ____ Steam ____ Inert gas ____ Air ✓	✓	
Electrical service has been locked out and tagged.	✓	
All grounding/bonding wire in place.	✓	
Surrounding equipment and operations are safe for hot work.	✓	
No open vessels or lines within 35 feet of hot work area.	✓	
No combustible items within 35 feet of hot work area or covered with wetted tarpaulins.	✓	
Fire Watch has been provided by Contractor.	✓	
No flammable gases greater than 10% LEL in hot work area.	✓	
All requirements of ITCPRO 9531 for Confined Space Entry have been met and ITC Form 9531-1 has been completed and posted.	✓	
If vessel contains leaded product, all requirements of ITCPRO 9531.3 have been met.	✓	

PERSONNEL PROTECTIVE EQUIPMENT

EYES
- ☐ Chemical Goggles
- ☐ Face Shield
- ☑ Safety Glasses
- ☐ Welders Mask

BODY
- ☐ Environmental Suit: ☐ PVC ☐ But
- ☐ Heavy Suit: ☐ PVC ☐ Neoprene
- ☐ Light PVC Suit
- ☑ Yellow Tyvek Suit
- ☐ White Tyvek Suit

EXTREMITIES
- ☑ Hard Hat
- ☑ Gloves
- ☑ Boots ☑ PVC ☐ Neoprene
- ☐ Hoods ☐ PVC ☐ Neoprene
- ☐ Foot Coverings, Disposable

RESPIRATORY
- ☑ Self-Contained Respirator
- ☐ Hose Line Respirator
- ☐ Hose Line W/Egress
- ☐ Cartridge Respirator

Cartridge Type ____
- ☐ Dust Respirator

EQUIPMENT REQUIRED
- ☑ Fire Extinguisher
- ☐ Fire Blanket
- ☐ Charged Water Hose
- ☐ Combustible Gas Indicator

Special Instructions:

Co[illegible]ted by: Art Crutchfield (Name Printed) [signature] (Signature) 5-12-95 (Date)

Manager

ITC FORM 9571-1
CS/103-5-85

195-

Date: 5-12-1995

Page 1 of 2

INTERNATIONAL TECHNOLOGY CORPORATION

ENTRY PERMIT
PERMIT-REQUIRED CONFINED SPACE (PRCS)

Procedure No. HS300
Revision No. 0
Date 03/01/93
Page 21a of 21

ATTACHMENT 3

Division/Location C. and R. Pittsburgh Job No. 519200
Customer U.S. Army Corps of Engineers Address Omaha, Nebraska
Location of Job Seneca Army Depot Identity of PRCS Kiln - Dryer
Describe Hazards of PRCS (Chemical, Physical) sharp edges - low overhead clearances slippery surfaces, contaminated dust/dirt - may be airborne
Chemical Introduced Into Space None

Purpose This Permit Authorized replacing belts

Ash Landfill
Seneca Army Depo.
Romulus, N.Y
14541

CHECKLIST	YES	DOES NOT APPLY
All lines leading to and from confined space have been blinded or disconnected	FMV	
Electrical service disconnected or locked out	FMV	
All grounding and bonding cables in place	FMV	
All lighting, fittings, power equipment, and extension cords are explosion-proof	FMV	
Ground Fault Circuit Indicator (GFCI) checked and functioning	FMV	
All ignition sources have been isolated	FMV	
All respiratory equipment and alarms checked and functional	FMV	
All safety harnesses and life lines checked	FMV	
All required PPE checked and in use	FMV	
All entrants are confined space trained	FMV	
All entrants are trained in the use, care, and limitations of respirators and PPE	FMV	
Attendant trained in emergency procedures	FMV	
Attendant(s) trained in rescue procedures		FMV
Outside rescue service will be used and they have been notified of this entry		FMV
Appropriate rescue equipment available and checked	FMV	
Ventilation system in use and effective		FMV
Entrant(s) can achieve a gas-tight seal with respirator	FMV	
Entrant(s) are not wearing contact lenses	FMV	
All tests have been completed and indicate that entrance requirements have been met	FMV	
Appropriate warning signs have been posted and unauthorized personnel have been excluded from the PRCS and area	FMV	

PERSONAL PROTECTIVE EQUIPMENT (Circle)

EYE/FACE
Chemical Goggles
Face Shield
Safety Glasses

EXTREMITIES
Hard Hat
Gloves (Material nitrile)
Hoods
Boots (Material neoprene)
Booties

BODY
Suit (Level ____, Material poly-tyvek)

RESPIRATORY
SCBA
Air Line
Egress System
Air Purifying (Cartridge GMC-H)
Powered Air Purifying (Cartridge ____)

OTHER
Hearing Protection
Harness & Lifeline
Chest or Parachute

RESCUE EQUIPMENT
Mechanical Extraction Device
First Aid Kit
SCBA
Other (Specify) emergency stretcher

NON-IT RESCUE TEAM
Instructions to Summon Rescue
Base Paramedics 9 - then 117

COMMUNICATION
Lifeline "Tug" Signals (See HASP)
Air Powered Horn Signals (See HASP)
Other ____

IF THE ANSWER TO ANY OF THE ABOVE QUESTIONS IS NO, ENTRY IS NOT PERMITTED.

OTHER PERMITS ISSUED FOR WORK IN PRCS: ____

OTHER HAZARD CONTROL PROCEDURES OR INSTRUCTIONS: ____

2-2

INTERNATIONAL TECHNOLOGY CORPORATION

TEST DATA
Oxygen, Flammability and Toxic Contaminants

Page ___ of ___ Procedure No. HS300
Revision No. 0
Date 03/01/93
Page 21b of 21

Time	Percent Oxygen	Percent LEL	___ PEG	___ PEG	___ PEG	___ PEG	___ PEG	Initials	Comments
14:00	20.9	0						FMV	
14:30	20.9	0						FMV	
15:00	20.9	0						FMV	
15:30	20.9	0						FMV	

AUTHORIZED ENTRANTS

Bill Williams

AUTHORIZED ATTENDANTS

Brian Coats

RESCUE PERSONNEL

Diagram the confined space, indicate location of manways and ventilators. Indicate location(s) where tests conducted.

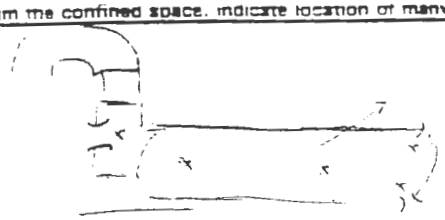

)(- Manway

= - Ventilator

X - Test Location

ACCEPTABLE ENTRY CONDITIONS

1) Entry Permit Completely Filled Out (FMV)
2) Oxygen between 20-23.5%
3) Combustible Gases Below 10% LEL
4) Permissible Levels of Toxic Gases (List)

5) Other

PROS SAFE FOR ENTRY

DATE/TIME 5-12-1995 14:00 NAME ENTRY SUPERVISOR Frank M. Vish Jr SIGNATURE Frank M Vish Jr

CURRENT ENTRY SUPERVISOR (IF DIFFERENT)

ENTRY PERMIT EXPIRES DATE/TIME 5-12-1995 17:30 (No longer than 1 shift)

ENTRY PERMIT CANCELLED

DATE/TIME 5-12-1995 15:30 SIGNATURE Frank M Vish Jr

REASON (✓) ✓ Work Completed ___ Authorized Conditions not met ___ Incident

DESCRIBE PROBLEMS DURING ENTRY AND RESOLUTION

RECLASSIFICATION TO NON-PERMIT-REQUIRED CONFINED SPACE
Describe hazard removal methods, without use of ventilation.

TESTING VERIFICATION SHOWN AT TIME 14:00 ON TEST DATA CHART ABOVE.

DATE/TIME 5-12-1995 1400 ENTRY SUPERVISOR SIGNATURE Frank M Vish Jr

REVIEWED BY ___ DATE ___

2-32

ATTACHMENT 4

LOCKOUT/TAGOUT FOR ELECTRICAL EQUIPMENT

Job: SEDA

Device: Dryer

Location: LFTD

Authorized Person: Art Crutchfield

PREPARATION FOR SHUTDOWN

1. Determine power type and shutoff location
2. Determine if there is more than one energy source
3. Determine magnitude of power (voltage)
4. Notify affected employees in the area that equipment will be under lockout for maintenance.
5. Shutoff power sources to machine.

LOCKOUT/TAGOUT

6. Lock and tag main power switch in the OFF position, [illegible] fuses.
7. Verify that no power is available to the equipment using a voltmeter, if necessary.
8. Drain devices such as capacitors, [illegible]
9. Verify that these devices have discharged energy by use of a voltmeter.
10. Repair equipment.

RETURN TO SERVICE

11. Be sure all connections are made and any unused tools and equipment are removed.
12. Remove lock if necessary to verify machine is repaired. The maintenance employee, while verifying the machine is repaired, cannot leave the immediate area.
13. Remove tag from machine.
14. Notify employees in the area that the equipment is available.

Authorized Person:

Site Supervisor:

IT Corporation is a wholly owned subsidiary of International Technology Corporation

CORPORATION

P.M. Shift

Operating Area LTTD Good for this date only 05-16-95 19

Specific vessel or equipment Drier Drive Chain Sprocket Bearing

Work to be done Cut old bearing off shaft and replace

TESTS

STATE EXACT LOCATION OF TEST	TIME	PERCENT LOWER EXPLOSION LIMIT	PERCENT OXYGEN	OTHERS		INIT
E. side at drive sprocket +	2135	0%	21%			
35' radius						

CHECK LIST

	Initial: Yes	Initial: Does Not Apply
Operations/plant personnel have been informed of work to be performed	Hyp	
All tanks/lines/valves are disconnected, blinded, or locked out.	Hyp	
uipment and all attached piping has been cleaned and purged with: (eck blank) Water ____ Steam ____ Inert gas ____ Air ✓ drier	Hyp	
Electrical service has been locked out and tagged.	Hyp	
All grounding/bonding wire in place.	Hyp	
Surrounding equipment and operations are safe for hot work.	Hyp	
No open vessels or lines within 35 feet of hot work area.	Hyp	
No combustible items within 35 feet of hot work area or covered with wetted tarpaulins.	Hyp	
Fire Watch has been provided by Contractor.	Hyp	
No flammable gases greater than 10% LEL in hot work area.	Hyp	
All requirements of ITCPRO 9531 for Confined Space Entry have been met and ITC Form 9531-1 has been completed and posted.		Hyp
If vessel contains leaded product, all requirements of ITCPRO 9531.3 have been met.		

PERSONNEL PROTECTIVE EQUIPMENT

EYES
- ☐ Chemical Goggles
- ☐ Face Shield
- ☐ Safety Glasses
- ☑ Welders Mask

BODY
- ☐ Environmental Suit: ☐ PVC ☐ E
- ☐ Heavy Suit: ☐ PVC ☐ Neoprene
- ☐ Light PVC Suit
- ☑ Yellow Tyvek Suit
- ☐ White Tyvek Suit

EXTREMITIES
- ☑ Hard Hat
- ☑ Gloves
- ☑ Boots ☑ PVC ☐ Neoprene
- ☐ Hoods ☐ PVC ☐ Neoprene
- ☐ Foot Coverings, Disposable

RESPIRATORY
- ☐ Self-Contained Respirator
- ☐ Hose Line Respirator
- ☐ Hose Line W/Egress
- ☑ Cartridge Respirator

Cartridge Type ____
- ☐ Dust Respirator

EQUIPMENT REQUIRED
- ☑ Fire Extinguisher
- ☐ Fire Blanket
- ☐ Charged Water Hose
- ☑ Combustible Gas Indicator

Special Instructions: Shut down unit, empty drier, cool + purge with the units exhaust fan. Use IT18 lights, fire extinguisher, fire watch with radio

C 'eted by: S Hopkins (Name Printed) Signature 05-16-95 Date

Manager

ITC FORM 9571-1
CS/103-5-85

ATTACHMENT 5

LOCKOUT/TAGOUT FOR COMPRESSED AIR AND GASES

Job: 519200

Device: Drier

Location: LTTD

Authorized Person: S. Hyl

PREPARATION FOR SHUTDOWN

1. Determine types and shutoff location
2. Determine if there is more than one energy source
3. Determine magnitude of compressed air, gas, steam, water, or fluids.
4. Notify affected employees in the area that equipment will be locked out for maintenance.
5. Shutoff main supply to machine.

LOCKOUT/TAGOUT

6. Lock and tag main supply in the OFF position.
7. Bleed line and verify that no air or gases remain in the equipment.
8. Repair equipment.

RETURN TO SERVICE

9. Be sure all connections are made and any unused tools and equipment are removed.
10. Remove lock if necessary to verify proper operation.
12. Remove tag.
13. Notify employees in the area that the equipment is available.

Authorized Person: S. Hyl

Site Supervisor: S. Hyl

IT Corporation is a wholly owned subsidiary of International Technology Corporation

CORPORATION

Operating Area LTTD Good for this date only 5-17 19 95

pecific vessel or equipment Pugmill

Work to be done Welding

TESTS

STATE EXACT LOCATION OF TEST	TIME	PERCENT LOWER EXPLOSION LIMIT	PERCENT OXYGEN	OTHERS		INITIA
thermal plant assembly	09 00	0	21.0			FMV
	09 30	0	20.7			FMV
	09 50	0	20.7			FMV
↓	10 15	0	20.7			FMV

CHECK LIST

	Initial: Yes	Initial: Does Not Apply
Operations/plant personnel have been informed of work to be performed	✓	
All tanks/lines/valves are disconnected, blinded, or locked out.	✓	
ipment and all attached piping has been cleaned and purged with: eck blank) Water ____ Steam ____ Inert gas ____ Air ____		✓
Electrical service has been locked out and tagged.	✓	
All grounding/bonding wire in place.	✓	
Surrounding equipment and operations are safe for hot work.	✓	
No open vessels or lines within 35 feet of hot work area.	✓	
No combustible items within 35 feet of hot work area or covered with wetted tarpaulins.	✓	
Fire Watch has been provided by Contractor.	✓	
No flammable gases greater than 10% LEL in hot work area.	✓	
All requirements of ITCPRO 9531 for Confined Space Entry have been met and ITC Form 9531-1 has been completed and posted.		✓
If vessel contains leaded product, all requirements of ITCPRO 9531.3 have been met.		✓

PERSONNEL PROTECTIVE EQUIPMENT

EYES
- ☐ Chemical Goggles
- ☐ Face Shield
- ☑ Safety Glasses
- ☑ Welders Mask

BODY
- ☐ Environmental Suit: ☐ PVC ☐ But
- ☐ Heavy Suit: ☐ PVC ☐ Neoprene
- ☐ Light PVC Suit
- ☐ Yellow Tyvek Suit
- ☑ White Tyvek Suit

EXTREMITIES
- ☑ Hard Hat
- ☑ Gloves
- ☑ Boots ☑ PVC ☐ Neoprene
- ☐ Hoods ☐ PVC ☐ Neoprene
- ☐ Foot Coverings, Disposable

RESPIRATORY
- ☐ Self-Contained Respirator
- ☐ Hose Line Respirator
- ☐ Hose Line W/Egress
- ☐ Cartridge Respirator

Cartridge Type ____
- ☐ Dust Respirator

EQUIPMENT REQUIRED
- ☑ Fire Extinguisher
- ☐ Fire Blanket
- ☐ Charged Water Hose
- ☐ Combustible Gas Indicator

Special Instructions: ____

Co ted by: Arti Crutchfield (Name Printed) [signature] (Signature) 5-17-95 (Date)

Manager

ITC FORM 9571-1
CS/103-5-85

ATTACHMENT 8

LOCKOUT/TAGOUT PROCEDURE FOR SPECIFIC EQUIPMENT

EQUIPMENT LTTD

CAT. NUMBER AND LOCATION

SERIAL NUMBER (IF AVAILABLE)

ELECTRICAL _____ VOLTAGE 460 LOCATION

DESCRIBE Pugmill + Dryer

AIR (TYPE) _____ LOCATION

DESCRIBE

GASES (TYPE) _____ LOCATION

DESCRIBE

STEAM (TYPE) _____ LOCATION

DESCRIBE

WATER _____ LOCATION

DESCRIBE

FLUIDS _____ LOCATION

DESCRIBE

HYDRAULIC _____ LOCATION

DESCRIBE

STORED ENERGY - CAPACITORS, SPRINGS, ETC.

DESCRIBE

LOG DATA AND RETURN TO SITE-SUPERVISOR

2-82

INTERNATIONAL TECHNOLOGY CORPORATION

HOT WORK PERMIT

O, ating Area LTTD Good for this date only 05-27- 19 95

Specific vessel or equipment 12" pug mill vent line

Work to be done clear 12" vent

TESTS

STATE EXACT LOCATION OF TEST	TIME	PERCENT LOWER EXPLOSION LIMIT	PERCENT OXYGEN	OTHERS		INITIAL
12" pug mill vent line 1st elb[illegible] and 35' radius	1200	0	21			

CHECK LIST

	Initial: Yes	Initial: Does Not Apply
Operations/plant personnel have been informed of work to be performed	14 yr	
Al ks/lines/valves are disconnected, blinded, or locked out.	14 yr	
Equipment and all attached piping has been cleaned and purged with: (check blank) Water____ Steam____ Inert gas____ Air ✓	14 yr	
Electrical service has been locked out and tagged.	14 yr	
All grounding/bonding wire in place.	14 yr	
Surrounding equipment and operations are safe for hot work.	14 yr	
No open vessels or lines within 35 feet of hot work area.	14 yr	
No combustible items within 35 feet of hot work area or covered with wetted tarpaulins.	14 yr	
Fire Watch has been provided by Contractor.	14 yr	
No flammable gases greater than 10% LEL in hot work area.	14 yr	
All requirements of ITCPRO 9531 for Confined Space Entry have been met and ITC Form 9531-1 has been completed and posted.		14 yr
If vessel contains leaded product, all requirements of ITCPRO 9531.3 have been met.		

PERSONNEL PROTECTIVE EQUIPMENT

EYES
- ☐ Chemical Goggles
- ☐ Face Shield
- ☐ Safety Glasses
- ☑ Welders Mask

BODY
- ☐ Environmental Suit: [illegible]
- ☐ Heavy Suit: ☐ PVC ☐ [illegible]
- ☐ Light PVC Suit
- ☐ Yellow Tyvek Suit
- ☑ White Tyvek Suit (Weld. Apron)

EXTREMITIES
- ☑ Hard Hat
- ☑ Gloves Welders
- ☑ Boots ☐ PVC ☑ Neoprene
- ☐ Hoods ☐ PVC ☐ Neoprene
- ☐ Foot Coverings, Disposable

RESPIRATORY
- ☐ Self-Contained Respir[illegible]
- ☐ Hose Line Respirator
- ☐ Hose Line W/Egress
- ☑ Cartridge Respirator

Cartridge Type yellow
- ☐ Dust Respirator

EQUIPMENT REQUIRE[illegible]
- ☑ Fire Extinguisher
- ☐ Fire Blanket
- ☐ Charged Water Hose
- ☑ Combustible Gas In[illegible]

Special Instructions:

Completed by: D. S. Hopkins
Name Printed

[signature]
Signature

Manager

ITC FORM 9571-1
CS/103-5-85

ATTACHMENT 7

LOCKOUT/TAGOUT FOR HYDRAULIC EQUIPMENT
Electrical

Job: SEAD 519200

Device: Pug Mill

Location: LTTD

Authorized Person: Hopkins D.S.

PREPARATION FOR SHUTDOWN

1. Determine types and shutoff location
2. Determine if there is more than one energy source
3. Determine magnitude of energy (pressure).
4. Notify affected employees in the area that equipment will be under lockout for maintenance.
5. Shutoff main hydraulic to equipment.

LOCKOUT/TAGOUT

6. Lock and tag main supply in the OFF position.
7. Drain fluids from shutoff valves to equipment.
8. Verify that the hydraulic fluid is disconnected.
9. Block ram or items controlled by the hydraulic system using the appropriate blocking.
10. Repair equipment.

RETURN TO SERVICE

11. Be sure all connections are made and any unused tools and equipment are removed.
12. Remove lock if necessary to verify machine is repaired. Maintenance employee cannot leave the immediate area, while verifying the machine is repaired.
13. Remove tag from machine.
14. Notify employees in the area that the equipment is available.

Authorized Person: D.S. Hopkins

Site Supervisor: D.S. Hopkins

IT Corporation is a wholly owned subsidiary of International Technology Corporation

ATTACHMENT 6

LOCKOUT/TAGOUT FOR ~~STEAM, WATER, AND FLUID LINES~~ Electric

Job: SEAD 519200

Device: Pig mill conveyor

Location: LTTD

Authorized Person: [illegible]

PREPARATION FOR SHUTDOWN

1. Determine types and shutoff location
2. Determine if there is more than one energy source
3. Determine magnitude of compressed air or gas.
4. Notify affected employees in the area that equipment will be under lockout for maintenance.
5. Disconnect/shutoff main steam, water or fluid lines to equipment.

LOCKOUT/TAGOUT

6. Lock and tag main supply (i.e. chaining through valve handle with lock) in the OFF position with a bleeder open on the load side.
7. Drain fluids from shutoff valves to equipment.
8. Repair equipment.

RETURN TO SERVICE

9. Be sure all connections are made and any unused tools and equipment are removed.
10. Remove lock if necessary to verify machine is repaired. The maintenance employee cannot leave the immediate area, while verifying the machine is repaired.
11. Remove tag from machine.
12. Notify employees in the area that the equipment is available.

Authorized Person: [illegible], D.S.

Site Supervisor: [illegible], D.S.

IT Corporation is a wholly owned subsidiary of International Technology Corporation

Date: 6-4-1995

INTERNATIONAL TECHNOLOGY CORPORATION

ENTRY PERMIT
PERMIT-REQUIRED CONFINED SPACE (PRCS)

Procedure No. HS300
Revision No. 0
Date 03/01/93
Page 21a of 21

Division/Location C. and R. Pittsburgh Job No. 519200
Customer U.S. Army Corps. of Engineers Address Omaha, Nebraska
Location of Job Seneca Army Depot Identity of PRCS Frac Tank # 239444
Describe Hazards of PRCS (Chemical, Physical) Slippery surfaces, pinch points equipment operating, low overhead clearance - contaminated soil
Chemical Introduced Into Space degreaser (cleaning solvent)

ATTACHMENT 3

Purpose This Permit Authorized to eliminate sediment and grease via water and cleaning solution

CHECKLIST	YES	DOES NOT APPLY
All lines leading to and from confined space have been blanked or disconnected		FMV.
Electrical service disconnected or locked out		FMV.
All grounding and bonding cables in place		FMV.
All lighting, fittings, power equipment, and extension cords are explosion-proof	FMV.	
Ground Fault Circuit Indicator (GFCI) checked and functioning	FMV.	
All ignition sources have been isolated	FMV.	
All respiratory equipment and alarms checked and functional	FMV.	
All safety harnesses and life lines checked Side entry only made		FMV.
All required PPE checked and in use	FMV	
All entrants are confined space trained	FMV.	
All entrants are trained in the use, care, and limitations of respirators and PPE	FMV.	
Attendant trained in emergency procedures	FMV	
Attendant(s) trained in rescue procedures		FMV
Outside rescue service will be used and they have been notified of this entry		FMV
Appropriate rescue equipment available and checked	FMV.	
Ventilation system in use and effective		FMV.
Entrant(s) can achieve a gas-tight seal with respirator		FMV.
Entrant(s) are not wearing contact lenses		FMV.
All tests have been completed and indicate that entrance requirements have been met	FMV.	
Appropriate warning signs have been posted and unauthorized personnel have been excluded from the PRCS and area	FMV.	

PERSONAL PROTECTIVE EQUIPMENT (Circle)

EYE/FACE
Chemical Goggles
Face Shield
Safety Glasses

EXTREMITIES
Hard Hat
Gloves (Material) nitrile
Hoods
Boots (Material) neoprene
Kneepads

BODY
Suit (Level) Modified D Material Saranex

RESPIRATORY
SCBA
Air Line
Egress System
Air Purifying (Cartridge _____)
Powered Air Purifying (Cartridge _____)

OTHER
Hearing Protection
Harness & Lifeline
Chest or Parachute

RESCUE EQUIPMENT
Mechanical Extraction Device
First Aid Kit
SCBA
Other (Specify) emergency stretcher

NON-IT RESCUE TEAM
Instructions to Surgeon Rescue Base Paramedics Dial 7 then 117

COMMUNICATION
Lifeline "Tug" Signals (See HASP)
Air Powered Horn Signals (See HASP)
Other

ASH Landfill
Seneca Army Depot
Romulus, N.Y.
14541

IF THE ANSWER TO ANY OF THE ABOVE QUESTIONS IS NO, ENTRY IS NOT PERMITTED.

OTHER PERMITS ISSUED FOR WORK IN PRCS:

OTHER HAZARD CONTROL PROCEDURES OR INSTRUCTIONS:

2-21

Date: 6-4-1995
Frac. Tank #239444 Page 2 of 2

INTERNATIONAL TECHNOLOGY CORPORATION

TEST DATA
Oxygen, Flammability and Toxic Contaminant(s)

Procedure No. HS300
Revision No. 0
Date 03/01/93
Page 21b of 21

Time	Percent Oxygen	Percent LEL	~~PEG~~	~~PEG~~	~~PEG~~	~~PEG~~	~~PEG~~	Initials	HNU PI101	Comments
1400	20.9	0						FMV.	0.0 ppm.	
14:30	20.8	0						FMV.	0.2 ppm	
14:45	20.9	0						FMV	0.1 ppm	
15:00	21.0	0						FMV.	0.0 ppm	
15:15	20.9	0						FMV	0.0 ppm	
15:30	20.9	0						FMV	0.2 ppm	
15:45	20.9	0						FMV	0.0 ppm	
16:15	20.9	0						FMV	0.0 ppm	

AUTHORIZED ENTRANTS
Patricia Wright
Brian Collis

AUTHORIZED ATTENDANTS
Brian Collis
Patricia Wright

RESCUE PERSONNEL
Dial 7 then, 117 Base Paramedics

Diagram the confined space, indicate location of manways and ventilators. Indicate location(s) where tests conducted.

Ash Landfill
Seneca Army Depot
Romulus, N.Y. 14541

TOP VIEW

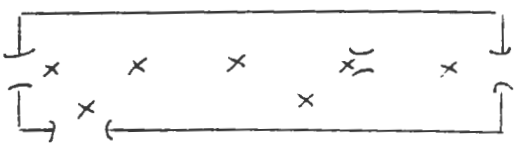

)(- Manway
= - Ventilator
X - Test Location

ACCEPTABLE ENTRY CONDITIONS

1) Entry Permit Completely Filled Out
2) Oxygen between 20-23.5%
3) Combustible Gases Below 10% LEL
4) Permissible Levels of Toxic Gases (List)

FMV.

5) Other

PRCS SAFE FOR ENTRY

DATE/TIME 6-4-1995 / 14:00 NAME ENTRY SUPERVISOR Frank M. Vish Jr. SIGNATURE Frank M. Vish Jr.

CURRENT ENTRY SUPERVISOR (IF DIFFERENT)

ENTRY PERMIT EXPIRES DATE/TIME 6-4-1995 / 17:30 (No longer than 1 shift)

ENTRY PERMIT CANCELLED

DATE/TIME 6-4-1995 / 16:30 SIGNATURE Frank M. Vish Jr.

REASON (✓) ✓ Work Complete ____ Authorized Conditions not met ____ Incident

DESCRIBE PROBLEMS DURING ENTRY AND RESOLUTION

RECLASSIFICATION TO NON-PERMIT-REQUIRED CONFINED SPACE
Describe hazard removal methods, without use of ventilation.

TESTING VERIFICATION SHOWN AT TIME 14:00 ON TEST DATA CHART ABOVE.

DATE/TIME 6-4-1995 / 14:00 ENTRY SUPERVISOR SIGNATURE Frank M. Vish Jr.

REVIEWED BY ____ DATE ____

2-32

Date: 6-5-1995

Page 1 of 2

INTERNATIONAL TECHNOLOGY CORPORATION

ENTRY PERMIT
PERMIT-REQUIRED CONFINED SPACE (PRCS)

Procedure No. HS300
Revision No. 0
Date 03/01/93
Page 21a of 21

ATTACHMENT 3

Division/Location C and R. Pittsburgh Job No. 519200
Customer U.S Army Corps of Engineers Address Omaha, Nebraska
Location of Job Seneca Army Depot Identity of PRCS Frac Tank # 239444
Describe Hazards of PRCS (Chemical, Physical) Slippery surfaces, low overhead contaminated soil residue, pinch points, equip. operating, noise
Chemical Introduced Into Space degreaser - cleaning solvent

Purpose This Permit Authorized to clean (decon) interior of the tank

CHECKLIST	YES	DOES NOT APPLY
All lines leading to and from confined space have been blinded or disconnected		FV.
Electrical service disconnected or locked out		FV.
All grounding and bonding cables in place		FV.
All lighting, fittings, power equipment, and extension cords are explosion-proof	FV.	
Ground Fault Circuit Indicator (GFCI) checked and functioning	FV.	
All ignition sources have been isolate	FV.	
All respiratory equipment and alarms checked and functional	FV.	
All safety harnesses and life lines checked		FV.
All required PPE checked and in use	FV.	
All entrants are confined space trained	FV	
All entrants are trained in the use, care, and limitations of respirators and PPE	FV	
Attendant trained in emergency procedures	FV	
Attendant(s) trained in rescue procedures		FV.
Outside rescue service will be used and they have been notified of this entry		FV
Appropriate rescue equipment available and checked	FV.	
Ventilation system in use and effective		FV.
Entrant(s) can achieve a gas-tight seal with respirator		FV
Entrant(s) are not wearing contact lenses		FV
All tests have been completed and indicate that entrance requirements have been met	FV.	
Appropriate warning signs have been posted and unauthorized personnel have been excluded from the PRCS and area	FV.	

THE ANSWER TO ANY OF THE ABOVE QUESTIONS IS NO. ENTRY IS NOT PERMITTED.

PERSONAL PROTECTIVE EQUIPMENT (Circle)

EYE/FACE
Chemical Goggles
Face Shield
Safety Glasses

EXTREMITIES
Hard Hat
Gloves (Material) nitrile
Hoods
Boots (Material) neoprene
Booties

BODY
Suit (Level) Mod. D. (Material) Saranex

RESPIRATORY
SCBA
Air Line
Egress System
Air Purifying (Cartridge ____)
Powered Air Purifying (Cartridge ____)

OTHER
Hearing Protection
Harness & Lifeline
Chest or Parachute

RESCUE EQUIPMENT
Mechanical Extraction Device
First Aid Kit eye wash
SCBA bottles
Other (Specify) stretcher

NON-IT RESCUE TEAM
Instructions to Summon Rescue Base 117

COMMUNICATION
Lifeline "Tug" Signals (See HASP)
Air Powered Horn Signals (See HASP)
Other ____

Asn Landfill
Seneca Army Depot
Romulus, NY 14541

OTHER PERMITS ISSUED FOR WORK IN PRCS: ____

OTHER HAZARD CONTROL PROCEDURES OR INSTRUCTIONS: ____

2-21

Date: 6-5-1995
Proc Tank # 239444

Page 2-2

INTERNATIONAL TECHNOLOGY CORPORATION

TEST DATA
Oxygen, Flammability and Toxic Contaminants

Procedure No. HS300
Revision No. 0
Date 03/01/93
Page 21b of 21

Time	Percent Oxygen	Percent LEL	___	___	___	___	___	Initials	HNU PI 101	Comments
08:45	21.0	0						FV	0.0 ppm	
09:15	21.0	0						FV	0.2	
10:00	21.0	0						FV	0.0	
10:25	21.0	0						FV	0.0	
11:00	20.9	0						FV	0.0	
11:30	21.0	0						FV	0.0	
12:00	20.9	0						FV	0.0	
12:30	21.0	0						FV	0.0	

	HNU PI 101 ppm	% O_2	% LEL
15:30	0.0	20.9	0
15:45	0.1	20.9	0
16:25	0.0	20.8	0
17:00	0.0	20.9	0

AUTHORIZED ENTRANTS
Brian Collis
Patricia Wright

AUTHORIZED ATTENDANTS
Patricia Wright
Brian Collis

RESCUE PERSONNEL

Diagram the confined space, indicate location of manways and ventilators, indicate location(s) where tests conducted.

Top View

(- Manway
= - Ventilator
X - Test Location

Ash Landfill
Seneca Army Depot
Romulus, N.Y. 14541

ACCEPTABLE ENTRY CONDITIONS

1) Entry Permit Completely Filled Out
2) Oxygen between 20-23.5%
3) Combustible Gases Below 10% LEL
4) Permissible Levels of Toxic Gases (List)
5) Other

FMV

PRCS SAFE FOR ENTRY
DATE/TIME 6-5-1995 / 08:45 NAME ENTRY SUPERVISOR Frank M. Vish SIGNATURE Frank M. Vish Jr.
CURRENT ENTRY SUPERVISOR (IF DIFFERENT)
ENTRY PERMIT EXPIRES DATE/TIME 6-5-1995 / 17:30 (No longer than 1 shift)

ENTRY PERMIT CANCELLED
DATE/TIME 6-5-1995 / 17:00 SIGNATURE Frank M. Vish Jr.
REASON (✓) ✓ Work Complete ___ Authorized Conditions not met ___ Incident

DESCRIBE PROBLEMS DURING ENTRY AND RESOLUTION

RECLASSIFICATION TO NON-PERMIT-REQUIRED CONFINED SPACE
Describe hazard removal methods, without use of ventilation.

TESTING VERIFICATION SHOWN AT TIME 08:45 ON TEST DATA CHART ABOVE.
DATE/TIME 6-5-1995 / 08:45 ENTRY SUPERVISOR SIGNATURE Frank M. Vish Jr.

REVIEWED BY ___ DATE ___

2-3

Date: 6-6-1995

Page 1 of 2

INTERNATIONAL TECHNOLOGY CORPORATION

ENTRY PERMIT
PERMIT-REQUIRED CONFINED SPACE (PRCS)

Procedure No. HS300
Revision No. 0
Date 03/01/93
Page 21a of 21

Division/Location C. and R., Pittsburgh Job No. 519200
Customer U.S. Army Corps of Engineers Address Omaha, Nebraska
Location of Job Seneca Army Depot Identity of PRCS Frac Tank #239444
Describe Hazards of PRCS (Chemical, Physical) slippery surfaces, low overhead clearance contaminated soil residue, pinch point, equipment operating
Chemical Introduced into Space de-greaser (cleaning solvent)

ATTACHMENT 3

Purpose This Permit Authorized To decon interior of the frac tank

Ash Landfill
Seneca Army Depot
Romulus, NY
14541

CHECKLIST	YES	DOES NOT APPLY
All lines leading to and from confined space have been blanked or disconnected		FV
Electrical service disconnected or locked out		FV
All grounding and bonding cables in place		FV
All lighting, fittings, power equipment, and extension cords are explosion-proof	FV	
Ground Fault Circuit Indicator (GFCI) checked and functioning	FV	
All ignition sources have been isolate	FV	
All respiratory equipment and alarms checked and functional	FV	
All safety harnesses and life lines checked		FV
All required PPE checked and in use	FV	
All entrants are confined space trained	FV	
All entrants are trained in the use, care, and limitations of respirators and PPE	FV	
Attendant trained in emergency procedures	FV	
Attendant(s) trained in rescue procedures		FV
Outside rescue service will be used and they have been notified of this entry		FV
Appropriate rescue equipment available and checked	FV	
Ventilation system in use and effective		FV
Entrant(s) can achieve a gas-tight seal with respirator		FV
Entrant(s) are not wearing contact lenses		FV
All tests have been completed and indicate that entrance requirements have been met	FV	
Appropriate warning signs have been posted and unauthorized personnel have been excluded from the PRCS and area	FV	

PERSONAL PROTECTIVE EQUIPMENT (Circle)

EYE/FACE
Chemical Goggles
Face Shield
Safety Glasses

EXTREMITIES
Hard Hat
Gloves (Material) nitrile
Hoods
Boots (Material) neoprene
Booties

BODY
Suit (Level ___, Material Saranex

RESPIRATORY
SCBA
Air Line
Egress System
Air Purifying (Cartridge ___)
Powered Air Purifying (Cartridge ___)

OTHER
Hearing Protection
Harness & Lifeline
Chest or Parachute

RESCUE EQUIPMENT
Mechanical Extraction Device
First Aid Kit eye wash bottles
SCBA
Other (Specify) emergency shower

NON-IT RESCUE TEAM
Instructions to Summon Rescue
Base 117

COMMUNICATION
Lifeline "Tug" Signals (See HASP)
Air Powered Horn Signals (See HASP)
Other ___

IF THE ANSWER TO ANY OF THE ABOVE QUESTIONS IS NO, ENTRY IS NOT PERMITTED.

OTHER PERMITS ISSUED FOR WORK IN PRCS: ___

OTHER HAZARD CONTROL PROCEDURES OR INSTRUCTIONS: ___

2-21

Date 6-6-1995
Frac Tank # 239444

Page 2 of 2

INTERNATIONAL TECHNOLOGY CORPORATION

TEST DATA
Oxygen, Flammability and Toxic Contaminants

Procedure No. HS300
Revision No. 0
Date 03/01/93
Page 21b of 21

Time	Percent Oxygen	Percent LEL	XG	XG	XG	XG	XG	Initials	Comments
09:30	20.9	0						FV	
09:55	21.0	0						FV	
10:15	21.0	0						FV	
10:30	21.0	0						FV	
11:00	20.9	0						FV	
11:15	20.8	0						FV	
11:30	20.8	0						FV	
12:00	21.0	0						FV	

AUTHORIZED ENTRANTS
Brian Collis
Mike Stricklin

AUTHORIZED ATTENDANTS
Mike Stricklin
Brian Collis

RESCUE PERSONNEL
Base Paramedics
117

Diagram the confined space, indicate location of manways and ventilators, indicate location(s) where tests conducted.

Top View

[ ] - Manway
= - Ventilator
X - Test Location

ACCEPTABLE ENTRY CONDITIONS

1) Entry Permit Completely Filled Out
2) Oxygen between 20-23.5%
3) Combustible Gases Below 10% LEL
4) Permissible Levels of Toxic Gases (List)

F.M.V.

5) Other

PRCS SAFE FOR ENTRY
DATE/TIME 6-6-1995 / 09:30 NAME ENTRY SUPERVISOR Frank M. Vish SIGNATURE Frank Vish
CURRENT ENTRY SUPERVISOR (IF DIFFERENT) ✓
ENTRY PERMIT EXPIRES DATE/TIME 6-6-1995 / 17:30 (No longer than 1 shift)

ENTRY PERMIT CANCELLED
DATE/TIME 6-6-1995 / 12:10 SIGNATURE Frank M. Vish Jr.
REASON (✓) ✓ Work Complete ____ Authorized Conditions not met ____ Incident

DESCRIBE PROBLEMS DURING ENTRY AND RESOLUTION

RECLASSIFICATION TO NON-PERMIT-REQUIRED CONFINED SPACE
Describe hazard removal methods, without use of ventilation.

TESTING VERIFICATION SHOWN AT TIME 09:30 ON TEST DATA CHART ABOVE.
DATE/TIME 6-6-1995 / 09:30 ENTRY SUPERVISOR SIGNATURE Frank M. Vish Jr.

REVIEWED BY ____ DATE ____

2-32

Appendix L

Excavation Debris Waste Profile

INTERNATIONAL TECHNOLOGY CORPORATION

May 18, 1995

Brian Burns
BFI of New York
2321 Kenmore Avenue
Kenmore, New York 14217

Dear Mr. Burns:

Please find enclosed the waste profile package prepared by IT Corporation for disposal of debris generated during excavation activities of Seneca Army Depot Activity Ash Landfill VOC Removal Action Project. The waste profile package included is for your review for acceptance of the debris into Niagara Recycling Subtitle D secure landfill. Upon receiving BFI approval, IT can begin the debris transportation and disposal process.

Please process the waste profile package at your earliest convenience as IT is ready to begin debris shipment as soon as possible. If you have any questions or would like to discuss the debris characterization and waste profile package please call at (716) 271-6430.

Sincerely,

IT Corporation

Sandra S. Tersegno
Project Scientist

Jeffery D. Korb
Project Engineer

Enclosure: Debris waste profile and associated paperwork.

BFI Waste Systems™
BROWNING-FERRIS INDUSTRIES

WCD No. AB 10915

/ / /
BFI WASTE CODE

WASTE APPROVAL REQUEST

BFI to complete this area.

BFI Initiator: _____
Location: _____
Company Number: _____
Telephone: ( ) _____
Fax: ( ) _____
Date: _____

Action Requested: ☐ New Waste Approval
☐ Up-Date Approval - Previous Number: _____
Disposal Site Requested: _____
Company Number: _____
Management Method Requested: ☐ Landfill ☐ Hauling
☐ Other _____

WASTE CHARACTERIZATION DATA
SPECIAL WASTE

IMPORTANT: THIS FORM IS TO BE COMPLETED BY A REPRESENTATIVE OF THE WASTE GENERATOR. PLEASE READ THE INSTRUCTIONS BEFORE COMPLETING THIS FORM. THIS FORM IS TO BE USED ONLY ONE TIME, AND MUST BE TYPEWRITTEN OR LEGIBLY PRINTED IN INK, AND SIGNED.

1. GENERATOR INFORMATION

a) Generator's Name: Seneca Army Depot Activity
b) Generating Facility's Address: 5786 State Route 96
City: Romulus State: NY Zip: 14541
c) Generator's Representative: Tom Grasek
Title: Environmental Protection Specialist
Telephone: (607) 869-1450
Fax: (607) 869-1316
d) Emergency/Information Contact: Fire Department
Title: Fire Department
Telephone: (607) 869-1316

e) State/Provincial/Local Registration No.: NA
Generator's EPA Id. No.: NY0213820830
Industry Description/SIC Code: Department of Defense
f) Customer's Name: IT Corporation
g) Customer's Mailing Address: 11499 Chester Rd
City: Cincinnati State: OH Zip: 45246
h) Representative: Doug Wehner
Telephone: (513) 782-4505
Fax: (513) 782-4510

2. GENERAL WASTE STREAM INFORMATION

a) Name/Description of The Waste: Non-hazardous Debris from landfill remediation activities
b) Process Generating Waste: Volatile Organic Compound Removal Action - Ash Landfill

c) Is this a treatment residue of a waste which was previously a restricted hazardous waste? ☐ Yes ☑ No
If yes, describe the waste and the process generating the waste prior to treatment. _____
d) Is this a "Hazardous Waste" as defined by State, Provincial, or local Regulations? ☐ Yes ☑ No
If yes, enter the Waste Identification Number if one has been assigned: _____
e) Is this a "Special Waste", an "Industrial Process Waste", or a "Pollution Control Waste" as defined by State, Provincial, or local Regulations?
☑ Yes ☐ No If yes, enter Waste Identification Number: _____
f) Recommended personal protection equipment and special handling procedures: None

g) Anticipated Volume: 150 ☐ Cubic Yards ☑ Tons ☐ Gallons ☐ Cubic Meters ☐ Tonnes(metric)
Other _____ Per: ☐ Year ☐ Month ☐ Week ☐ Day ☑ One Time ☐ Other _____
To be transported in: ☑ Bulk ☐ Drums (type/size) _____ ☐ Other _____
h) Is a representative sample included? ☐ Yes ☑ No

3. WASTE PROPERTIES AT 72°F

a) Physical State:
☑ Solid ☐ Semi-solid
☐ Powder ☐ Liquid
☐ Combination
b) Layers:
☑ Single-layered ☐ Bi-layered ☐ Multi-layered
c) Colors(s):
Describe various - white, beige, silver, green
d) Odor:
Describe _____
☑ None ☐ Mild ☐ Strong

e) Density Range: NA to _____
☐ N/D ☐ lbs/gal. ☐ g./cc.
☐ lbs./yd.^{3} ☐ Kg/m^3 ☐ Other

f) Flash Point, °F:
☐ ≤ 72 ☐ 73-100 ☐ 101-140
☐ 141-200 ☑ ≥ 201 ☐ N/A ☐ N/D

g) pH:
☐ ≤ 2 ☐ 2.1 - 5.0 ☐ 5.1 - 9.0
☐ 9.1 - 12.4 ☐ ≥ 12.5 ☑ N/A ☐ N/D

/ / /

BFI WASTE CODE

4. REACTIVITY	5. THIS WASTE CONTAINS	6. SPECIAL WASTE COMPOSITION
Note if the waste exhibits any of the following reactive properties: ☐ Water Reactive ☐ Acid Reactive ☐ Alkaline Reactive ☐ Oxidizer ☐ Autopolymerizable ☐ Pyrophoric ☐ Explosive ☐ Thermally Sensitive ☐ Shock Sensitive ☑ None of the above	Note if the waste contains any of the following: If any are checked "Yes", specify type (if applicable) and include its concentration as part of the waste composition, Section 6. ☐ Free Liquids ☐ Free Cyanide ☐ Free Sulfide ☐ Free Ammonia ☐ Dioxins ☐ Organic Solvents ☐ Virgin Oils ☐ Used Oils ☐ OSHA Substances ☐ Etiological Agents ☐ Pathogens ☐ Biological Materials ☐ Radioactive Materials ☐ PCBs not regulated by TSCA 40 CFR 761 ☑ None of the Above	Concentration ranges are suggested and units must be identified in percentages (%) and/or parts per million (ppm). Attach additional pages if necessary. Components — Range Min. / Max. Personal Protective Equip — 60-70% Wood — 1-2.5% Plastic — 1-25% Concrete — 5-10% Paper filters — 5-10% Glass-broken — 1-2.5% Metal — 1-2.5%

7. TRANSPORTATION INFORMATION

If the waste is a DOT Hazardous Material, complete the following:

Proper USDOT Shipping Name: not applicable

USDOT Hazard Class: _____ UN or NA Number: _____ CERCLA Reportable Quantity: _____

8. SUPPLEMENTAL INFORMATION

☐ None ☐ MSD Sheets ☑ Analytical Data ☑ Chain of Custody ☑ Memo/Letter ☐ Waste Composition

☑ Other - describe: Debris Characterization Evaluation, Project Site History Description No. of Pages: 20

9. GENERATOR'S CERTIFICATION

I hereby certify that the above and attached description is complete and accurate to the best of my knowledge and ability to determine, that no deliberate or willful omissions of composition or properties exist, that all known or suspected hazards have been disclosed, and that the waste is not a regulated hazardous waste by the USEPA, by an applicable State or Provincial authority, or by any applicable local authority, and does not contain PCBs regulated by TSCA (i.e., 40 CFR 761) or any Provincial authority.

GENERATOR'S AUTHORIZED SIGNATORY as identified in Section 1 (c):

DATE	PRINT NAME	SIGNATURE	TITLE
5-15-95	THOMAS GRASEK	Thomas Grasek	ENVIR. PROT. SPEC

REPRESENTATIVE SAMPLE CERTIFICATION

This Section is to be completed by the person obtaining the sample of the above described waste.

I certify that the sample for which analytical data was provided on the waste described above is representative of that waste and was collected and preserved in a manner consistent with accepted technical standards.

Lab sample assigned to: Recra Environmental, Inc. (peel off label)

Collector's Name: Don Harrington / Eric Williams

Signature: Don Harrington / Eric E. Williams

Company: IT Corporation

Title: Proj Eng Scientist / Project Engineer

Telephone Number: (716) 271-6430

Date Collected: 1-26-95 and

Generator's Name: _____

Waste Description: _____

Date Collected: _____

WCD No. AB 10[illegible]5

47-19-7 (10/85)—Text 12

NEW YORK STATE DEPARTMENT OF ENVIRONMENTAL CONSERVATION
DIVISION OF SOLID AND HAZARDOUS WASTE • BUREAU OF HAZARDOUS WASTE OPERATIONS
50 WOLF ROAD, ALBANY, NEW YORK 12233-001

FOR STATE USE ONLY		
SITE NO.	APPLICATION NO.	DATE RECEIVED
DEPARTMENT ACTION ☐ Approved ☐ Disapproved		DATE

APPLICATION FOR TREATMENT OR DISPOSAL OF AN INDUSTRIAL WASTE STREAM

SEE APPLICATION INSTRUCTIONS ON REVERSE SIDE

1. NAME OF PROJECT/FACILITY	2. COUNTY	3. SITE NUMBER
NIAGARA LANDFILL, INC.	Erie	15S04
4. NAME OF OWNER	**5. ADDRESS (Street, City, State, Zip Code)**	**6. TELEPHONE NO.**
Seaway Industrial Park Dev. Corp.	756 Sheridan Dr., Tonawanda, NY 14140	716-873-5221
7. NAME OF OPERATOR	**8. ADDRESS (Street, City, State, Zip Code)**	**9. TELEPHONE NO.**
Niagara Landfill, Inc.	P.O. Box 344 LPO, Niagara Falls, NY 14304-0344	716-285-3344

10. METHOD OF TREATMENT OR DISPOSAL

SANITARY LANDFILL
DISPOSAL CODE D90

11. COMPANY GENERATING WASTE	12. ADDRESS OF FACILITY GENERATING WASTE (Street, City, State, Zip Code)
Seneca Army Depot Activity	5786 State Route 96 Romulus, NY 14541

13. REPRESENTATIVE OF WASTE GENERATOR	14. MAILING ADDRESS OF REPRESENTATIVE	15. TELEPHONE NO.
Tom Grasek	5786 State Route 96 Romulus, NY, 14541	607-869-1450

16. DESCRIPTION OF PROCESS PRODUCING WASTE

Non-hazardous debris from landfill remediation activities

17. EXPECTED ANNUAL WASTE PRODUCTION: 150 Tons/Year — Gallons/Year

18. WASTE HAULED IN: ☐ Drums ☐ Bulk Tank ☒ Roll-off Container ☐ Other

19. WASTE COMPOSITION — 19a. Average Percent Solids 100%

19b Physical State: ☐ Liquid ☐ Slurry ☐ Sludge ☒ Solid ☐ Contained Gas

19c pH Range: NA to

19d COMPONENTS	CONCENTRATION (Dry Weight) Upper	Lower	Typical	UNIT (Check one) WL%	PPM
1) Personal Protective Equipment	60	70	—	☒	☐
2) Concrete	5	10	—	☒	☐
3) Paper Filters	5	10	—	☒	☐
4) Plastic, Wood, Metal, Glass	4	10	—	☒	☐

20. IS AN ANALYSIS OF WASTE ATTACHED? ☒ Yes ☐ No

21. WAS AN EP TOXICITY TEST CONDUCTED ON THE WASTE? ☐ Yes ☒ No If "Yes", attach results

22. MATERIAL IS: ☐ Hazardous ☒ Non-Hazardous

23. DETAIL ALL HAZARD AND NUISANCE PROBLEMS ASSOCIATED WITH THE WASTES. List necessary safety, handling, treatment and disposal precautions.

NONE

24. WHERE WAS MATERIAL DISPOSED OF PREVIOUSLY?

On-site at Seneca Army Depot Ash Landfill

25. NAME OF WASTE TRANSPORTER	26. ADDRESS (Street, City, State, Zip Code)	27. NYSDEC PERMIT No.	28. TELEPHONE NO.
BFI of New York Inc.	54 Doran Ave. Geneva, NY 14456		315-789-6735

29. CERTIFICATION

I hereby affirm under penalty of perjury that information provided on this form and attached statements and exhibits is true to the best of my knowledge and belief. False statements made herein are punishable as a Class A misdemeanor pursuant to Section 210.45 of the Penal Law.

a. SIGNATURE AND TITLE OF REPRESENTATIVE OF WASTE GENERATOR	DATE
X Thomas Grasek ENVIR. PROT. SPEC	5-15-95
b. SIGNATURE AND TITLE OF REPRESENTATIVE OF TREATMENT OR DISPOSAL FACILITY	DATE
X	

SENECA ARMY DEPOT
ASH LANDFILL DEBRIS CHARACTERIZATION
TECHNICAL EVALUATION

Introduction

The Seneca Army Depot, Ash Landfill remediation effort has generated approximately 150 cubic yards of mixed debris for disposal. The debris consists of waste personal protective equipment (PPE), plastic, wood, concrete, metal, and rubber. One representative composite sample was collected and sent to a certified laboratory for analysis. The sample was analyzed for total volatiles, semivolatiles, pesticides, PCBs, metals various classical chemistry parameters, and TCLP Trichloroethene. The analytical data was received and reviewed in order to properly characterize the Ash landfill debris for disposal. The following discusses the decision process that was followed in order to properly characterize the debris for disposal.

Evaluation

The analytical results are summarized as follows:

Volatiles (mg/kg): Trichloroethene = 11 D, Toluene = 0.690, Total Xylenes = 0.055 J

TCLP Trichloroethene: = Not detected at 0.008 mg/l

Semivolatiles: ND

PCBs: ND

Pesticides: ND

Metals (mg/kg): As = 1.6, Ba = 35.5, Be = 0.28, Cr = 11.3, Cu = 13.5, Pb = 24.3, Ni = 12.1, Vn = 8.7, Zn = 11.9

Classical Chemistry: Ash Content = 9.5 %, Dry weight = 89.5 %, Flashpoint = >200 °F, Heat of Combustion = 7770 BTU, Leachable TOC = 2120 mg/kg, Leachable TON = 18.3 mg/kg, Leachable Total Recoverable Phenolics = 0.64 mg/kg, Total Moisture Content = 10.5 %, TOX = 4.8 mg/kg

The initial step in the characterization process was to determine if the detected volatiles and metals could have come from a known RCRA listed hazardous waste. After evaluation of Ash Landfill site history it was determined that no known listed hazardous wastes are/were present in the Ash Landfill. Therefore the debris could not be characterized as a RCRA F, P, K, or U listed hazardous waste.

Next it was determined that the debris did not fit the criteria for an ignitable, corrosive, or reactive waste based on site history, process knowledge, nature of the generated debris, and the debris analytical data. Therefore, the debris could not be classified as a D001 through D003 characteristic hazardous waste.

The only remaining potential hazardous classification is toxicity characteristic for D004 through D043 wastes. All detected constituents were compared to the toxicity characteristic values as listed in 40 CFR 261. The only constituent concentration that exceeds toxicity characteristic values is Trichloroethene (TCE) at 11 mg/kg. The toxicity characteristic value is 0.5 mg/l. Since the debris analytical results are

based on total concentrations or mg/kg and the toxicity characteristic value is based on leachable concentrations or mg/l, the "20X rule" needed to be applied for a direct comparison of analytical results.

The 20X rule is a conservative approach that assumes 100% leachability of a detected compound based on the toxicity characteristic leaching procedure (TCLP) that adds 20 ml of extraction fluid to one gram of sample. Utilizing the 20X rule the resulting TCE concentration would have been estimated at 0.55 mg/l. A decision was made to pursue testing the debris by TCLP analysis for TCE in order to determine the true leachable concentration of TCE. Since the resulting TCLP TCE concentration of non-detect at 0.008 mg/l is less than the TCE toxicity characteristic concentration of 0.5 mg/l, the Ash Landfill debris can not be a classified as a D040 hazardous waste.

Recommendation

After review of all analytical data and Federal and State regulations it is recommended that the Ash Landfill Debris be characterized and disposed as a non hazardous waste in a secure Subtitle D landfill.

IT Corporation
Sandra S. Tersegno
Project Scientist

SEDA Ash Landfill VOC Removal Action

Introduction

Seneca Army Depot Activity (SEDA) was listed on the NPL in July of 1989 based on threats posed by contaminated soils and debris that form the source of the groundwater contamination problem at the Ash Landfill site. Contaminated soils cover approximately 78,000 square feet (2 acres). At an average depth of 8 feet, there are approximately 23,000 cubic yards of soil to be treated using Low Temperature Thermal Desorption. Soil will be excavated, treated, tested and then placed back as backfill.

Site History

SEDA was constructed in 1941 and has been owned and operated by the Department of the Army since that time. Prior to construction of the depot, the site was used for farming. From 1941 to 1974, uncontaminated trash was burned in a series of burn pits east of the abandoned incinerator building. During approximately the time period of 1941 until the late 1950's or early 1960's the ash from the refuse burning pits was buried in the landfill. The landfill likely received other depot wastes. The incinerator was built in 1974 and took the place of the open burning pits. Between 1974 and 1979, materials intended for disposal were transported to the incinerator. Nearly all of the approximately 18 tons of refuse generated per week on the depot were incinerated. The source for the refuse was domestic waste from depot activities and family housing. Large items which could not be burned were disposed of at the non-combustible fill landfill.

Location

SEDA is located in Romulus, New York, in Seneca County. The installation is bounded by State Route 96A (to the west) and State Route 96 (to the east). The cities of Geneva and Rochester are located to the northwest; Syracuse is to the northeast and Ithaca is located to the south. The subject of this source removal is the "Bend-in-the-Road" area of the Ash Landfill site. The Ash Landfill is located near the western boundary of SEDA.

RECRA ENVIRONMENTAL INC.

Chemical and Environmental Analysis Services

February 13, 1995

Ms. Sandra Tersegno
IT Corporation
14 Allen's Creek Road
Rochester, New York 14618

RE: Analytical Results

Dear Ms. Tersegno:

Please find enclosed results concerning the analyses of the samples recently submitted by your firm. The Pertinent Information regarding these analyses is listed below:

Quote #:	NY95-144
Project Name:	SENECA ARMY DEPOT - DEBRIS ANALYSIS
Case:	2428
Matrix:	Debris
Date of Receipt:	1/26/95
Sample Date:	1/25,26/95

If you have any questions concerning this data, please contact Ms. Julie Calvert, Program Manager at (716) 691-2600 and refer to the I.D. number listed below. It has been our pleasure to provide IT Corporation with Environmental Testing Services. We look forward to serving you in the future.

Sincerely,
RECRA ENVIRONMENTAL, INC.

Julianne M. Calvert
Program Manager

Kenneth E. Kasperek
Laboratory Director

JMC/KEK/jpz

I.D.#95-0505 & D95-0140
#NY5A5282

RECRA ENVIRONMENTAL, INC. / I.T. Corp.

CHAIN OF CUSTODY RECORD

PROJECT NO: 519200

SITE NAME: SEDA Ash Landfill Phase II

SAMPLERS (SIGNATURE): Eric G. Wilkins

STATION NO	DATE	TIME	COMP	GRAB	STATION LOCATION	NO OF CONTAINERS	40 ml VOA Vial	4oz. glass jar Volatiles	8oz. glass jar Metals	32oz. glass: total Semi-Vols, Metals, WQ	32oz. glass: TCLP Herb + Pest.	Total: VOA's	Total: Alcohols	REMARKS
TB	1-25-95	2000		✓	Trip Blanks	2	2							HCl: ph < 2
T-Al-34	1-25-95	2000		✓	T-Al-34	4		4						Composite in lab as sample
T-Al-35	1-26-95	0520		✓	T-Al-35	4		4						Composite in lab as sample.
T-Al-36	1-26-95	1650		✓	T-Al-36	4		4						Composite in lab as sample
T-Al-M20	1-26-95	1700	✓		T-Al-M20	1			1					Composite of: T-Al-34, T-Al-35, T-Al-36
Debris-1	1-26-95	1505		✓	Debris-1	4				1	1	1	1	

Date: 1-26-95

Signature: EGW

RELINQUISHED BY (SIGNATURE)	DATE/TIME	RECEIVED BY (SIGNATURE)	RELINQUISHED BY (SIGNATURE)	DATE/TIME	RECEIVED BY (SIGNATURE)
Eric G. Wilkins	1/26/95 1745				
RELINQUISHED BY (SIGNATURE)	DATE/TIME	RECEIVED BY (SIGNATURE)	RELINQUISHED BY (SIGNATURE)	DATE/TIME	RECEIVED BY (SIGNATURE)
RELINQUISHED BY (SIGNATURE)	DATE/TIME	RECEIVED FOR LABORATORY BY (SIGNATURE)	DATE/TIME	REMARKS	
		Duane Ship	1-26-95	COOLER TEMP = 6°C	

Distribution: Original accompanies shipment copy to coordinator field files

00005

METHOD 8240 - VOLATILE ORGANICS
ANALYSIS DATA SHEET

00017
Client No.

DEBRIS-1

Lab Name: Recra Environmental Contract: _____

Lab Code: RECNY Case No.: _____ SAS No.: _____ SDG No.: 2428

Matrix: (soil/water) SOIL Lab Sample ID: A5050501

Sample wt/vol: 5.02 (g/mL) G Lab File ID: K6261.MSQ

Level: (low/med) MED Date Samp/Recv: 01/26/95 01/26/95

% Moisture: not dec. 0.0 Heated Purge: N Date Analyzed: 01/30/95

GC Column: DB-624 ID: 0.53 (mm) Dilution Factor: 1.00

Soil Extract Volume: 5000 (uL) Soil Aliquot Volume: 100.00 (uL)

CAS NO.	COMPOUND	CONCENTRATION UNITS: (ug/L or ug/Kg) UG/KG	Q
67-64-1	Acetone	500	U
71-43-2	Benzene	250	U
75-15-0	Carbon Disulfide	250	U
56-23-5	Carbon Tetrachloride	250	U
108-90-7	Chlorobenzene	250	U
141-78-6	Ethyl acetate	1000	U
100-41-4	Ethyl benzene	250	U
60-29-7	Ethyl ether	250	U
75-09-2	Methylene chloride	250	U
78-93-3	2-Butanone	500	U
108-10-1	4-Methyl-2-pentanone	500	U
127-18-4	Tetrachloroethene	250	U
71-55-6	1,1,1-Trichloroethane	250	U
79-00-5	1,1,2-Trichloroethane	250	U
79-01-6	Trichloroethene	10000	E
75-69-4	Trichlorofluoromethane	250	U
76-13-1	1,1,2-Trichloro-1,2,2-trifluoroethane	250	U
108-88-3	Toluene	690	
1330-20-7	Total Xylenes	55	J
67-66-3	Chloroform	250	U
106-46-7	1,4-Dichlorobenzene	250	U
107-06-2	1,2-Dichloroethane	250	U
75-35-4	1,1-Dichloroethene	250	U
75-01-4	Vinyl chloride	500	U
108-94-1	Cyclohexanone	250	U

METHOD 8240 - VOLATILE ORGANICS
ANALYSIS DATA SHEET

00018
Client No.

DEBRIS-1 DL

Lab Name: Recra Environmental Contract: _____

Lab Code: RECNY Case No.: _____ SAS No.: _____ SDG No.: 2428

Matrix: (soil/water) SOIL Lab Sample ID: A5050501DL

Sample wt/vol: 5.02 (g/mL) G Lab File ID: K6263.MSQ

Level: (low/med) MED Date Samp/Recv: 01/26/95 01/26/95

% Moisture: not dec. 0.0 Heated Purge: N Date Analyzed: 01/30/95

GC Column: DB-624 ID: 0.53 (mm) Dilution Factor: 2.00

Soil Extract Volume: 5000 (uL) Soil Aliquot Volume: 100.00 (uL)

CAS NO.	COMPOUND	CONCENTRATION UNITS: (ug/L or ug/Kg) UG/KG	Q
67-64-1	Acetone	1000	U
71-43-2	Benzene	500	U
75-15-0	Carbon Disulfide	500	U
56-23-5	Carbon Tetrachloride	500	U
108-90-7	Chlorobenzene	500	U
141-78-6	Ethyl acetate	2000	U
100-41-4	Ethyl benzene	500	U
60-29-7	Ethyl ether	500	U
75-09-2	Methylene chloride	500	U
78-93-3	2-Butanone	1000	U
108-10-1	4-Methyl-2-pentanone	1000	U
127-18-4	Tetrachloroethene	500	U
71-55-6	1,1,1-Trichloroethane	500	U
79-00-5	1,1,2-Trichloroethane	500	U
79-01-6	Trichloroethene	11000	D
75-69-4	Trichlorofluoromethane	500	U
76-13-1	1,1,2-Trichloro-1,2,2-trifluoroethane	500	U
108-88-3	Toluene	760	D
1330-20-7	Total Xylenes	500	U
67-66-3	Chloroform	500	U
106-46-7	1,4-Dichlorobenzene	500	U
107-06-2	1,2-Dichloroethane	500	U
75-35-4	1,1-Dichloroethene	500	U
75-01-4	Vinyl chloride	1000	U
108-94-1	Cyclohexanone	500	U

METHOD 8270 - SEMI-VOLATILE ORGANICS
ANALYSIS DATA SHEET

00041
Client No.

DEBRIS-1

Lab Name: Recra Environmental Contract: _____

Lab Code: RECNY Case No.: _____ SAS No.: _____ SDG No.: 2428

Matrix: (soil/water) SOIL Lab Sample ID: A5050501

Sample wt/vol: 30.07 (g/mL) G Lab File ID: 21114Y.MSQ

Level: (low/med) LOW Date Samp/Recv: 01/26/95 01/26/95

% Moisture: 0.0 decanted: (Y/N) N Date Extracted: 01/30/95

Concentrated Extract Volume: 1000 (uL) Date Analyzed: 01/31/95

Injection Volume: 1.00 (uL) Dilution Factor: 1.00

GPC Cleanup: (Y/N) N pH: 0.0

CAS NO.	COMPOUND	CONCENTRATION UNITS: (ug/L or ug/Kg) UG/KG	Q
95-48-7	2-Methylphenol	330	U
108-39-4	3-Methylphenol	330	U
106-44-5	4-Methylphenol	330	U
21-14-2	2,4-Dinitrotoluene	330	U
118-74-1	Hexachlorobenzene	330	U
87-68-3	Hexachlorobutadiene	330	U
67-72-1	Hexachloroethane	330	U
98-95-3	Nitrobenzene	330	U
87-86-5	Pentachlorophenol	1600	U
110-86-1	Pyridine	330	U
95-95-4	2,4,5-Trichlorophenol	330	U
88-06-2	2,4,6-Trichlorophenol	330	U

METHOD 8080 - POLYCHLORINATED BIPHENYLS
ANALYSIS DATA SHEET

00062
Client No.

DEBRIS-1

Lab Name: Recra Environmental Contract: _____

Lab Code: RECNY Case No.: _____ SAS No.: _____ SDG No.: 2428

Matrix: (soil/water) SOIL Lab Sample ID: A5050501

Sample wt/vol: 30.15 (g/mL) G Lab File ID: _____

% Moisture: 0.0 decanted: (Y/N) N Date Samp/Recv: 01/26/95 01/26/95

Extraction: (SepF/Cont/Sonc/Soxh): SONC Date Extracted: 01/30/95

Concentrated Extract Volume: 10000(uL) Date Analyzed: 01/30/95

Injection Volume: 1.00(uL) Dilution Factor: 1.00

GPC Cleanup: (Y/N) N pH: 0.00 Sulfur Cleanup: (Y/N) Y

CAS NO.	COMPOUND	CONCENTRATION UNITS: (ug/L or ug/Kg) UG/KG	Q
12674-11-2	Aroclor 1016	40	U
11104-28-2	Aroclor 1221	80	U
11141-16-5	Aroclor 1232	40	U
53469-21-9	Aroclor 1242	40	U
12672-29-6	Aroclor 1248	40	U
11097-69-1	Aroclor 1254	40	U
11096-82-5	Aroclor 1260	40	U

METHOD 8080 - TCLP PESTICIDES
ANALYSIS DATA SHEET

00063

Client No.

DEBRIS-1

Lab Name: Recra Environmental Contract: _____

Lab Code: RECNY Case No.: _____ SAS No.: _____ SDG No.: 2428

Matrix: (soil/water) SOIL Lab Sample ID: A5050501

Sample wt/vol: 1000.00 (g/mL) ML Lab File ID: _____

% Moisture: 100.0 decanted: (Y/N) N Date Samp/Recv: 01/26/95 01/26/95

Extraction: (SepF/Cont/Sonc/Soxh): SEPF Date Extracted: 02/01/95

Concentrated Extract Volume: 10000 (uL) Date Analyzed: 02/02/95

Injection Volume: 1.00 (uL) Dilution Factor: 20.00

GPC Cleanup: (Y/N) N pH: 0.00 Sulfur Cleanup: (Y/N) N

CAS NO.	COMPOUND	CONCENTRATION UNITS: (ug/L or ug/Kg) MG/L	Q
58-89-9	gamma-BHC (Lindane)	0.0020	U
57-74-9	Chlordane	0.010	U
72-20-8	Endrin	0.0020	U
5-44-8	Heptachlor	0.0020	U
1024-57-3	Heptachlor epoxide	0.0020	U
72-43-5	Methoxychlor	0.010	U
8001-35-2	Toxaphene	0.020	U

METHOD 8015 NON HALOGENATED ORGANIC COMPOUNDS
ANALYSIS DATA SHEET

00105 Client No.

DEBRIS-1

Lab Name: Recra Environmental Contract: _____

Lab Code: RECNY Case No.: _____ SAS No.: _____ SDG No.: 2428

Matrix: (soil/water) SOIL Lab Sample ID: A5050501

Sample wt/vol: 9.28 (g/mL) G Lab File ID: 2A25258.TX0

Level: (low/med) Med Date Samp/Recv: 01/26/95 01/26/95

% Moisture: not dec. 0.0 Date Analyzed: 02/01/95

GC Column: NUKOL Dia: 0.53 (mm) Dilution Factor: 1.00

Soil Extract Volume: 8000(uL) Soil Aliquot Volume: 1.00(uL)

CAS NO.	COMPOUND	CONCENTRATION UNITS: (ug/L or ug/Kg) UG/KG	Q
71-36-3	n-Butyl alcohol	860	U
78-83-1	Isobutanol	860	U
67-56-1	Methanol	860	U

METHOD 8150 - TCLP HERBICIDES
ANALYSIS DATA SHEET

Client No. 00121

DEBRIS-1

Lab Name: Recra Environmental Contract: _____

Lab Code: RECNY Case No.: _____ SAS No.: _____ SDG No.: 2428

Matrix: (soil/water) SOIL Lab Sample ID: A5050501

Sample wt/vol: 500.00 (g/mL) ML Lab File ID: _____

% Moisture: 100.0 decanted: (Y/N) N Date Samp/Recv: 01/26/95 01/26/95

Extraction: (SepF/Cont/Sonc/Soxh): SEPF Date Extracted: 02/01/95

Concentrated Extract Volume: 10000 (uL) Date Analyzed: 02/06/95

Injection Volume: 1.00 (uL) Dilution Factor: 10.00

GPC Cleanup: (Y/N) N pH: 0.00 Sulfur Cleanup: (Y/N) N

CAS NO.	COMPOUND	CONCENTRATION UNITS: (ug/L or ug/Kg) MG/L	Q
94-75-7	2,4-D	0.0020	U
93-72-1	2,4,5-TP (Silvex)	0.0020	U

Total Metals Analysis

oratory: Recra Environmental, Inc. - RECNY
Job No: A95-0505
Sample ID: A5050501
ient Sample ID: DEBRIS-1
G No: 2428

Matrix: Solid, oth
Sample Date: 01/26/95
% Dry Weight: 100.00
Dilution Factor: 1

Parameter	Units	Method	Digestion Date	Analysis Date	Result	Q
ntimony - Total	MG/KG	6010	02/02/95	02/03/95	0.47	U
rsenic - Total	MG/KG	6010	02/02/95	02/03/95	1.4	
arium - Total	MG/KG	6010	02/02/95	02/03/95	30.4	
eryllium - Total	MG/KG	6010	02/02/95	02/03/95	0.24	
admium - Total	MG/KG	6010	02/02/95	02/03/95	0.24	U
hromium - Total	MG/KG	7190	02/02/95	02/07/95	9.7	
opper - Total	MG/KG	7210	02/02/95	02/07/95	11.6	
ead - Total	MG/KG	6010	02/02/95	02/03/95	20.8	
ercury - Total	MG/KG	7471	02/03/95	02/03/95	0.090	U
ickel - Total	MG/KG	7520	02/02/95	02/07/95	10.4	
elenium - Total	MG/KG	7740	02/02/95	02/03/95	0.14	U
ilver - Total	MG/KG	6010	02/02/95	02/03/95	0.47	U
hallium - Total	MG/KG	7841	02/02/95	02/06/95	0.19	U
anadium - Total	MG/KG	6010	02/02/95	02/03/95	7.4	
inc - Total	MG/KG	7950	02/02/95	02/07/95	10200	

Wet Chemistry Analysis

00149

Client Sample No.

DEBRIS-1

I Name: Recra Environmental, Inc. Contract: _____

Lab Code: RECNY Case No.: _____ SAS No.: _____ SDG No.: 2428

Matrix (soil/water): SOIL Lab Sample ID: A5050501

% Solids: 85.7 Date Samp/Recv: 01/26/95 01/26/95

Parameter Name	Units of Measure	Result	C	Q	M	Method Number	Analyzed Date
Amenable Cyanide	UG/G	10	U			9010	02/01/95
Ash Content	%	9.5				D-482-80	02/06/95
Dry Weight	%	89.5				D2216-19	02/02/95
Flashpoint	°F	>200				1010	02/01/95
H2S Released From Waste	MG/KG	10	U			SECT7.3	02/02/95
HCN Released From Waste	MG/KG	10	U			SECT7.3	02/02/95
Heat of Combustion	BTU/LB	7770				D-240-76	02/02/95
Leachable Amenable Cyanide	UG/G	10	U			9010	02/01/95
Leachable pH	S.U.	9.69				9045	01/31/95
Leachable Sulfide	UG/G	2.0	U			9030	02/02/95
Leachable Total Organic Carbon	UG/G	2120				9060	01/31/95
Leachable Total Organic Nitrogen	UG/G	18.3				TKN-NH3	02/03/95
Leachable Total Recoverable Phenolics	UG/G	0.64				9066	01/31/95
Total Moisture Content	%	10.5				D2216-90	02/02/95

Comments:

Wet Chemistry Analysis

Client Samp 09150

DEBRIS-1

Lab Name: Recra Environmental, Inc. Contract: _____

Lab Code: RECNY Case No.: _____ SAS No.: _____ SDG No.: 2428

Matrix (soil/water): SOIL Lab Sample ID: A5050501MD

% Solids: 0.0 Date Samp/Recv: 01/26/95 01/26/95

Parameter Name	Units of Measure	Result	C	Q	M	Method Number	Analyzed Date
Ash Content	%	21.7				D-482-80	02/06/95
Dry Weight	%	85.9				D2216-19	02/02/95
Heat of Combustion	BTU/LB	11200				D-240-76	02/02/95
Total Moisture Content	%	14.1				D2216-90	02/02/95

Comments:

Wet Chemistry Analysis

Client Sample No. 00151

DEBRIS-1

Lab Name: Recra Environmental, Inc. Contract: _____

Lab Code: RECMI Case No.: _____ SAS No.: _____ SDG No.: 2428

Matrix (soil/water): SOIL Lab Sample ID: A5050501

% Solids: 100.0 Date Samp/Recv: 01/26/95 01/26/95

Parameter Name	Units of Measure	Result	C	Q	M	Method Number	Analyzed Date
Extractable Organic Halides	UG/G	4.8				9020	01/30/95

Comments:

RECRA ENVIRONMENTAL INC.

Chemical and Environmental Analysis Services

March 30, 1995

Ms. Sandra Tersegno
IT Corporation
140 Allen's Creek Road
Rochester, New York 14618

RE: Analytical Results

Dear Ms. Tersegno:

Please find enclosed results concerning the analyses of the samples recently submitted by your firm. The pertinent information regarding these analyses is listed below:

Quote #:	NY95-144
Project Name:	SENECA ARMY DEPOT
Case:	5282
SDG:	DEBR2
Matrix:	DEBRIS
Sample Received:	03/17/95
Sample Date:	03/17/95

If you have any questions concerning this data, please contact Ms. Candace L. Steady, Program Manager, at (716) 691-2600 and refer to the I.D. number listed below. It has been our pleasure to provide IT Corporation with environmental testing services. We look forward to serving you in the future.

Sincerely,

RECRA ENVIRONMENTAL, INC.

Candace L. Steady

Candace L. Steady
Program Manager

Kenneth E. Kasperek
Laboratory Director

CLS/KEK/dms
Enclosure: Diskette

I.D. #A95-1501
#NY5A5282

METHOD 8240 - TCLP TRICHLOROETHENE
ANALYSIS DATA SHEET

000025

Client No.

DEBRIS-2

Lab Name: Recra Environmental Contract: _____

Lab Code: RECNY Case No.: 5282 SAS No.: _____ SDG No.: DEBR2

Matrix: (soil/water) SOIL Lab Sample ID: A5150101

Sample wt/vol: 5.00 (g/mL) ML Lab File ID: K7137.MSO

Level: (low/med) LOW Date Samp/Recv: 03/17/95 03/17/95

% Moisture: not dec. 100.0 Heated Purge: N Date Analyzed: 03/24/95

GC Column: DB-624 ID: 0.53 (mm) Dilution Factor: 10.00

Soil Extract Volume: _____ (uL) Soil Aliquot Volume: _____ (uL)

CAS NO.	COMPOUND	CONCENTRATION UNITS: (ug/L or ug/Kg) MG/L	Q
79-01-6	Trichloroethene	0.0080	U

RECRA ENVIRONMENTAL, INC. IT CORP

CHAIN OF CUSTODY RECORD

PROJECT NO: 519200

SITE NAME: SEOA - Ash Landfill Phase II

SAMPLERS (SIGNATURE): Don Harrington

STATION NO	DATE	TIME	COMP	GRAB	STATION LOCATION	NO OF CONTAINERS	40ml glass Vials VOA	4oz glass Volatiles	~~8oz glass~~ 1 litre plastic METALS	8 oz glass Metals	8oz glass - TCLP	TCLP TCE ONLY	REMARKS
													3 day TAT
TB	3/17/95	0045		✓	Trip Blank	2	2						HCL, pH<2
FB-A1-71	3/17/95	0125		✓	FB-A1-71	2	2						HCL, PH<2
EB-A1-71	3/17/95	0130	✓		EB-A1-71	4	2		2				
T-A1-71	3/17/95	0125		✓	T-A1-71	4		4					Composite in lab as one sample, MS/MSD
T-A1-72	3/17/95	0540		✓	T-A1-72	4		4					Composite in lab as one sample
T-A1-73	3/17/95	1630		✓	T-A1-73	4		4					Composite in lab as one sample
T-A1-M33	3/17-95	1630	✓		T-A1-M33	1				1			
T-A1-M33DUP	3/17/95	1630	✓		T-A1-M33 DUP	1				1			
Debris-2	3/17/95	1645	✓		Debris-2	1					1		TCLP TCE only, 5 Day TAT

SEAL Date: 3/17/95 Signature: Don Harrington

RELINQUISHED BY (SIGNATURE)	DATE/TIME	RECEIVED BY (SIGNATURE)	RELINQUISHED BY (SIGNATURE)	DATE/TIME	RECEIVED BY (SIGNATURE)
Sandra Teresegna	3-17-95 1730				
RELINQUISHED BY (SIGNATURE)	DATE/TIME	RECEIVED BY (SIGNATURE)	RELINQUISHED BY (SIGNATURE)	DATE/TIME	RECEIVED BY (SIGNATURE)
RELINQUISHED BY (SIGNATURE)	DATE/TIME	RECEIVED FOR LABORATORY BY (SIGNATURE)	DATE/TIME	REMARKS	
		Scott Carl	3/17/95 2020		

Distribution: Original accompanies shipment; copy to coordinator field files

C00015

INTERNATIONAL TECHNOLOGY CORPORATION

Sent to USACE
5-10-95 SST

May 9, 1995

Ed Bave
USACE
Omaha District
Attn: CEMRO-ED-EH
215 North 17th Street
Omaha, Nebraska 68102-4978

Dear Mr. Bave:

Please find enclosed the revised waste profile information prepared by IT Corporation for disposal of the debris generated during excavation activities of SEDA Ash Landfill VOC Removal Action Project. The waste profile has been changed from the previously approved hazardous characterization to the new non-hazardous characterization. The change has occurred based on the USACE recommendation to analyze a composite debris sample by TCLP trichloroethene. The TCE TCLP analysis resulted in the debris being characterized as non-hazardous.

The revised waste profile information is for your review. Upon receiving approval and proper signatures, IT can begin the debris transportation and disposal process.

If you have any questions or would like to discuss the debris characterization and waste profile package please call at (716) 271-6430.

Sincerely,

IT Corporation

Sandra S. Tersegno

Sandra S. Tersegno
Project Scientist

Michael J. Capacci
Senior Project Scientist

Enclosure: Debris waste profile and associated paperwork.

INTERNATIONAL TECHNOLOGY CORPORATION

May 31, 1995

Mr. Brian Burns
BFI
PO Box 571
Kenmore, New York 14217

Paul Micciche
IT Corporation
140 Allen's Creek Road
Rochester, New York 14618

Mr. Burns:

As per the request of the New York State Department of Environmental Conservation (NYSDEC), IT Corporation is pleased to provide a description of the procedure which was used by Mr. Donald Harrington of IT, to collect a sample of debris (designated as DEBRIS-2) at the Seneca Army Depot - Ash Landfill site on March 17, 1995. This letter also presents a narrative describing the procedure followed for acquisition of the first debris sample (designated as DEBRIS-1) on January 26, 1995.

Sample DEBRIS-1 was collected by Mr. Eric Williams on January 26, 1995, in order to allow for characterization of the debris for transportation and off-site disposal. Mr. Williams visually inspected the debris pile and estimated the piles composition of pieces of wood, plastic, metal, brick, tires, concrete, glass, and used personal protective clothing on a percentage basis. Based on this approximation Mr. Williams then collected pieces of personal protective clothing and filled each of the sample jars (two 32-ounce jars and two 4-ounce jars) one-half full. He then collected pieces of water filters and representative samples of the remaining materials and filled the sample jars with same. The samples were submitted to the laboratory for the following analyses:

- Volatiles by method 8240
- Semi-volatiles by method 8270

- Pesticides/PCBs by method 8080
- Herbicides by meted 8150
- Non-halogenated organics (alcohols) by method 8015
- Metals by method 6000 - 7000 series
- Extractable organic halides by method 9020
- Leachable total recoverable phenolics by method 9066
- Leachable total organic carbon by method 9060
- Cyanide (amenable and leachable) by method 9010
- Leachable sulfide by method 9030
- Hydrogen sulfide and hydrogen cyanide following Section 7.3 of SW-846 (third ed.)
- Leachable total organic nitrogen / TKN-NH_3
- Leachable sulfide by method 9030
- Ash content / D-482-80
- Dry weight / D-2216-19
- Heat of combustion / D-240-76
- Total moisture content / D-2216-90

Laboratory results from analysis of DEBRIS-1 indicated that trichloroethylene (TCE) was detected. Based on this result it was decided that a second sample of the debris would be acquired and analyzed only for TCE by TCLP extraction 1311 (method 8240 for TCE).

On March 17, 1995, Mr. Harrington collected the debris composite sample (DEBRIS-2) by gathering pieces of each of the constituent types of debris in the pile, based on a visual estimate of the percentage composition of the pile, from several locations on the perimeter of the pile. The debris pile consisted of pieces of wood, plastic, metal, brick, tires, concrete, glass, and used personal protective clothing. Prior to placing the pieces into a 4-

Use or disclosure of the proposal data on this page is subject to the restriction on the cover page of this proposal

concrete, glass, and used personal protective clothing. Prior to placing the pieces into a 4-ounce sample jar, Mr. Harrington either cut the debris samples into smaller fragments using a pair of scissors, or hammered them into smaller fragments through use of a sledgehammer. Mr. Harrington then placed the pieces into the sample jar by hand (using clean nitrile gloves) for shipment to the laboratory for analysis for TCLP for TCE only. Based on the results for DEBRIS-2 the debris was characterized as non-hazardous.

If you have any questions regarding the debris sampling method please contact me.

Paul J. Micciche

Paul J. Micciche

Project Quality Assurance Officer

PJM/pjm

cc: David Buzzelli (IT)

Pete Coutts (IT)

Sandra Tersegno (IT)

Use or disclosure of the proposal data on this page is subject to the restriction on the cover page of this proposal

INTERNATIONAL TECHNOLOGY CORPORATION

May 26, 1995

Brian Burns
BFI of New York
2321 Kenmore Avenue
Kenmore, New York 14217

Dear Mr. Burns:

As per your request regarding the Seneca Army Depot (SEDA) Ash Landfill debris waste profile package, IT Corporation is providing additional information regarding sources utilized in debris characterization process.

As specified in the SEDA Ash Landfill debris characterization technical evaluation included as part of the debris waste profile package, the debris can not be characterized as containing RCRA listed hazardous wastes based on SEDA Ash Landfill site history and process knowledge. Numerous remedial investigations were conducted at the SEDA Ash Landfill from approximately 1989 to 1994. The "Remedial Investigation Report, Seneca Army Depot Ash Landfill Site" prepared by Engineering-Sciences, Inc for the United States Army Corp of Engineers and the "Action Memorandum, Seneca Army Depot, Ash Landfill Removal Action," May 1994 prepared by Engineering-Sciences, Inc for the Untied States Army Corp of Engineers are two such documents utilized for the debris characterization. In addition interviews were conducted with Seneca Army Depot Activity environmental representatives as to the historical usage of the Ash Landfill and surrounding area.

Based on the outcome of these characterization activities, IT Corporation determined that the detected constituents could not be sourced to RCRA listed hazardous wastes and prepared the non-hazardous debris waste profile for BFI-Niagara Recycling Landfill. If you have any additional questions or would like to further discuss the debris characterization and waste profile package please call at (716) 271-6430.

Sincerely,

IT Corporation

Sandra S. Tersegno
Project Scientist

Michael J. Capacci
Senior Project Scientist

Regional Office
140 Allen's Creek Road • Suite 150 • Rochester, New York 14618 • 716-271-6430

IT Corporation is a wholly owned subsidiary of International Technology Corporation

C:\sandra\seneca\ph2\sp2dblb2.doc

INTERNATIONAL TECHNOLOGY CORPORATION

June 2, 1995

Project No. 519200

Mr. Brian Burns
BFI of New York
2321 Kenmore Avenue
Kenmore, New York 14217

Pool Liner Disposal
Seneca Army Depot Ash Landfill project

Dear Mr. Burns:

With this letter, IT Corporation (IT) is requesting approval to dispose of two pool liners and one geotextile membrane which was previously used to containerize water generated from excavation dewatering and minor equipment decontamination activities at the Seneca Army Depot Ash Landfill VOC Removal project site. Our intent is to dispose of this material under our existing debris waste profile with BFI.

The two pool liners and geotextile membrane served primarily as containment vessels for excavation dewatering activities located in the clean area of the project site. Decontamination of on-site equipment in the pool liner area prior to removal of the equipment from the site was only a minor activity. During the pool containment area dismantlement, the liners and membrane were ripped and shredded. Because of the condition of the liners and membrane, we were unable to perform any additional decontamination, such as triple rinsing, of the material. The material has been picked up and shaken with an excavator to ensure that only residual soil/silt remains on the liners.

The characterization of the liners and membrane material was undertaken to determine if this material could have come into contact with a known RCRA listed hazardous waste. After evaluation of Ash Landfill site history, it was determined that no known listed hazardous waste are/were present in the Ash Landfill. Therefore, the liner/membrane debris could not be characterized as a RCRA F, P, K, or U listed hazardous waste.

C:\JDK\SEDA\BFI ltr.602

Regional Office
140 Allen's Creek Road • Suite 150 • Rochester, New York 14618 • 716-271-6430

IT Corporation is a wholly owned subsidiary of International Technology Corporation

Analytical data from the containerized wastewater generated from excavation dewatering and equipment decontamination activities are attached for review. Upon receiving approval, IT will begin transportation of the debris material. If you have any questions, please feel free to cal at (716) 271-6430.

Sincerely,

IT CORPORATION

Jeffrey D. Korb
Project Engineer

Michael J. Capacci
Sr. Project Scientist

JDK:MJC:jdk
Attachment

Table 3-2
U.S. Army Corps of Engineers Omaha District
Seneca Army Depot Ash Landfill Phase II
Preliminary Water Data Summary

Site Specific Compounds	Sample Identification and Constituent Concentration (ppb)	
	D-12-1	D-34-1
Soluble Metals		
Antimony	<2.5	<2.5
Arsenic	<1.5	<1.5
Barium	83.2 B	83 B
Beryllium	<1.5	<1.5
Cadmium	<2.5	<2.5
Chromium	11.4	9.9
Cobalt	<5.0	<5.0
Copper	7.2 B	6.0 B
Iron	5300	5110
Lead	16	16.0
Magnesium	5940	6600
Manganese	72	77
Mercury	<0.20	0.22
Nickel	<10.0	<10.0
Selenium	<1.5	<1.5
Silver	<5.0	<5.0
Sodium	11200	16200
Vanadium	14.4 B	12.8 B
Zinc	215	244
Classical Chemistry		
Chloride	35.6 ppm	25.5 ppm
Nitrate	0.15 ppm	0.13 ppm
pH	7.62	7.60
Specific Conductivity	246	240
Sulfate	5.2 ppm	33.6 ppm
Total Phosphorous	0.34 ppm	0.23 ppm
Turbidity	400 NTU	315 NTU

Notes:

B - Inorganics. Indicates constituent concentration detected above the instrument detection limit but below the practical quantitation limit

D - Influent water sample ("Dirty" water)

12 or 34 Indicates composite sample of water contained in frac tank numbers 1 and 2 or frac tank numbers 3 and 4.

ppb- Parts per billion.

ppm- Parts per million.

NTU- Nephelometric Turbidity Unit.

Table 3-2
U.S. Army Corps of Engineers Omaha District
Seneca Army Depot Ash Landfill Phase II
Preliminary Water Data Summary

Site Specific Compounds	Sample Identification and Constituent Concentration (ppb)	
	D-12-1	D-34-1
Volatiles		
Trichloroethene	2.6	2.7
1,2-Dichloroethene	7.1	5.7
Vinyl Chloride	<1.0	<1.0
Chloroform	1.4	<0.20
1,1-Dichloroethene	<0.20	<0.20
1,1-Dichloroethane	<0.20	<0.20
1,1,1-Trichloroethane	<0.20	<0.20
Tetrachloroethene	<0.20	<0.20
Benzene	0.25	<0.20
Toluene	0.28	<0.18
Ethyl benzene	<0.20	3.9
Total Xylenes	1.81	30
Semivolatiles		
Napthalene	<10	<10
Pentachlorophenol	<25	<25
Phenol	<10	<10
4-Methylphenol	<10	<10
2-Methylnapthalene	<10	<10
Diethyl phthalate	<10	<10
Di-n-butylphthalate	<10	<10
Total Metals		
Antimony	<2.5	<2.5
Arsenic	<1.5	<1.5
Barium	212	70.3 B
Beryllium	<1.5	<1.5
Cadmium	<2.5	<2.5
Chromium	41.5	9.3
Cobalt	10.6 B	<5.0
Copper	<5.0	14.2
Iron	19600	5850
Lead	70.0	19.0
Magnesium	9980	5860
Manganese	333	102
Mercury	<0.20	0.20
Nickel	29.8	<10.0
Selenium	<15.0	<1.5
Silver	<5.0	<5.0
Sodium	11900	9450
Vanadium	54.1	10.7 B
Zinc	712	226

See notes at end of table

Appendix M

Equipment Inspection Sheets

INTERNATIONAL TECHNOLOGY CORPORATION

DAILY LOG			
DATE			
NO.			
SHEET		OF	

FIELD ACTIVITY DAILY LOG

ROJECT NAME | PROJECT NO.

FIELD ACTIVITY SUBJECT:

DESCRIPTION OF DAILY ACTIVITIES AND EVENTS:

Seneca Army Depot

Vehicle Type: IT 28F CAT Loader

Hours 29.6

Brakes ok

Glass ok

Mirrors ok

Defroster ok

Steering ok

Elec. ok

Tires 2 4 2ow

Fire Exting. ok

Exhaust ok

Fluid Levels ok

Visible Dam. ok

9-29-94 [illegible]

VISITORS ON SITE:

CHANGES FROM PLANS AND SPECIFICATIONS, AND OTHER SPECIAL ORDERS AND IMPORTANT DECISIONS.

WEATHER CONDITIONS:

IMPORTANT TELEPHONE CALLS:

IT PERSONNEL ON SITE:

SIGNATURE | DATE:

327A-7-86

INTERNATIONAL TECHNOLOGY CORPORATION

DAILY LOG	DATE			
	NO.			
	SHEET		OF	

FIELD ACTIVITY DAILY LOG

ROJECT NAME | PROJECT NO.

FIELD ACTIVITY SUBJECT:

DESCRIPTION OF DAILY ACTIVITIES AND EVENTS:

Seneca Army Depot

Vehicle D3C CAT Dozer

Hours 32

Brakes ok

Glass ok

mirrors ok

steering ok

Elec ok

Tracks ok

Fire Exting NO

Exhaust ok

Fluid Levels ok

Visible Dam. ok

9-29-94

Ed [illegible]

VISITORS ON SITE:

CHANGES FROM PLANS AND SPECIFICATIONS, AND OTHER SPECIAL ORDERS AND IMPORTANT DECISIONS.

WEATHER CONDITIONS:

IMPORTANT TELEPHONE CALLS:

IT PERSONNEL ON SITE:

SIGNATURE

DATE:

327A-7-86

SSHP ACKNOWLEDGEMENT FORM

I have been informed of, and will abide by the procedures set forth in this SSHP for the Ash Landfill Removal Action taking place at the Seneca Army Depot in Romulus, New York.

Printed Name	Signature	Representing	Date
Richard Folsum	Richard Folsum	IT Corp	9/26/94
Tammy Fleming	Tammy Fleming	I.T Corp	9/26-94
Eddie Fleming	Eddie Fleming	IT Corp	9.26.94
Tim Meade	Tim Meade	IT Corp	9-26-94
MARTIN FREEDMAN	Martin Freedman	IT CORP	9-26-94.
Perry Copeland	Perry Copeland	IT Corp	9/26/94
Thomas Billy	Thomas Billy	IT CORP	9.26-94
GREG McELROY	Greg McElroy	IT CORP	9-26/94
MARK WILCOVE	Mark Wilcove	IT Corp	9-27/94
Jay Stockholm	Jay Stockholm	Nothingle Drilling	9-27/94
Steve Lorenty	Steve Lorenty	Nothingle Drilling	9-27-94
Don Hamilton	Don Hamilton	IT	9-27-94
Sandra Tversen	Sandra Tversen	IT	9-27-94
Al Berman	Al Berman	IT	9-27-94
PETE Lutts	Peter W. Lutts	IT	9/27/94
Todd J Jawoski	Todd J Jawoski	Myriad Const.	9/27/94
Mark S. Sweet	Mark S. Sweet	" "	9/27/94
Joseph a Megill	Joseph Megill	Myriad Const.	9/27/94
JEFFREY KORB	Jeffrey Korb	IT CORP.	9/27/94
GREGORY HOOVER	Gregory Hoover	CORPS OF ENGRS	9/27/94

SSHP ACKNOWLEDGEMENT FORM

I have been informed of, and will abide by the procedures set forth in this SSHP for the Ash Landfill Removal Action taking place at the Seneca Army Depot in Romulus, New York.

Printed Name	Signature	Representing	Date
David Burcelli	David J Burcelli	IT Corp	9/29/94
FRANK MOORE	Frank Moore	IT CORP	9-29-94
Kamal Gupta	Kamal Gupta	NYSDEC	9/29/94

Equipment Checklist for Inspections

Equipment Checklist

This is a guide indicating the numbered items on the inspection sheet that pertain to various units of construction equipment.

Mechanical Truck Crane	Lower Unit 1 through 39, 43 through 48; Upper Unit 50 through 69, 71 through 87; Boom 91 through 105
Crawler Crane	Lower Unit 1, 23, 40, 41, 42; Upper Unit 50 through 87; Boom 91 through 105
Hydraulic Truck Crane	Lower Unit 1 through 39, 43 through 48; Upper Unit 50 through 69, 71 through 78, 81 through 87; Boom 88 through 90, 93 through 99, 101 through 106
Hydraulic Cherry Picker	Lower Unit 1, 3 through 39, 43 through 48, 62 through 71, 81, 82, 84 through 87; Boom 88 through 90, 93 through 99, 101 through 105
Backhoe Mechanical	Lower Unit 1, 31, 40 through 42; Upper Unit 50 through 61, 64 through 87; Boom 89, 93 through 97, 101 through 103, 106
Backhoe Hydraulic Rubber Tire	Lower Unit 1, 31, 34, 39, 49; Upper Unit 50 through 61, 64, 65, 68 through 70, 72 through 78, 81 through 87; Boom 88, 89, 93 through 97, 106
Backhoe Hydraulic Crawler	Lower Unit 1, 31, 40 through 42; Upper Unit 50 through 61, 64, 65, 68 through 70, 72 through 78, 81 through 87; Boom 88, 89, 93 through 97, 106
Loader-Dozer Crawler	1, 3 through 8, 10 through 16, 19, 22 through 25, 27 through 32, 34, 38, 40 through 49, 106
Loader-Dozer Rubber Tire	1, 3 through 8, 10 through 32, 34 through 39, 43 through 49, 106
Air Compressor	1, 3 through 8, 12, 22 through 24, 27 through 33, 38, 39, 43 through 46
Forklift Truck	1, 3 through 7, 10 through 20, 22 through 32, 38, 39, 43 through 49
Manlift Boom Type (JLG)	1, 3 through 14, 22 through 32, 34 through 39, 43 through 47, 49, 68 through 70, 81, 86
Welding Machine Pump Generators Mixers (Gas & Diesel)	1, 3 through 7, 12, 22 through 25, 27 through 32, 38, 39, 44 through 46
Trailers	1, 10, 17, 18, 20, 21, 39, 44, 45, 48

Equipment Checklist for Inspections

Equipment Checklist

This is a guide indicating the numbered items on the inspection sheet that pertain to various units of construction equipment.

Mechanical Truck Crane	Lower Unit 1 through 39, 43 through 48; Upper Unit 50 through 69, 71 through 87; Boom 91 through 105
Crawler Crane	Lower Unit 1, 23, 40, 41, 42; Upper Unit 50 through 87; Boom 91 through 105
Hydraulic Truck Crane	Lower Unit 1 through 39, 43 through 48; Upper Unit 50 through 69, 71 through 78, 81 through 87; Boom 88 through 90, 93 through 99, 101 through 106
Hydraulic Cherry Picker	Lower Unit 1, 3 through 39, 43 through 48, 62 through 71, 81, 82, 84 through 87; Boom 88 through 90, 93 through 99, 101 through 105
Backhoe Mechanical	Lower Unit 1, 31, 40 through 42; Upper Unit 50 through 61, 64 through 87; Boom 89, 93 through 97, 101 through 103, 106
Backhoe Hydraulic Rubber Tire	Lower Unit 1, 31, 34, 39, 49; Upper Unit 50 through 61, 64, 65, 68 through 70, 72 through 78, 81 through 87; Boom 88, 89, 93 through 97, 106
Backhoe Hydraulic Crawler	Lower Unit 1, 31, 40 through 42; Upper Unit 50 through 61, 64, 65, 68 through 70, 72 through 78, 81 through 87; Boom 88, 89, 93 through 97, 106
Loader-Dozer Crawler	1, 3 through 8, 10 through 16, 19, 22 through 25, 27 through 32, 34, 38, 40 through 49, 106
Loader-Dozer Rubber Tire	1, 3 through 8, 10 through 32, 34 through 39, 43 through 49, 106
Air Compressor	1, 3 through 8, 12, 22 through 24, 27 through 33, 38, 39, 43 through 46
Forklift Truck	1, 3 through 7, 10 through 20, 22 through 32, 38, 39, 43 through 49
Manlift Boom Type (JLG)	1, 3 through 14, 22 through 32, 34 through 39, 43 through 47, 49, 68 through 70, 81, 86
Welding Machine Pump Generators Mixers (Gas & Diesel)	1, 3 through 7, 12, 22 through 25, 27 through 32, 38, 39, 44 through 46
Trailers	1, 10, 17, 18, 20, 21, 39, 44, 45, 48

CONTRACT	UNIT #	IT EQUIPMENT INSPECTION	DATE 9-26-94
EQUIPMENT D3 Dozer		(Initial & Final)	INSP. BY Tim Meade
OTHER		☒ Initial ☐ Final	APPROVED

Item No.	Lower Unit	(✓)	Item No.	Lower Unit (Continued)	(✓)	Item No.	Upper Unit (Continued)	(✓)
1	General Appearance	✓	37	O'Rigger Pads		72	Oil Level	
2	~~Mileage~~ hr 292		38	Clutch, Trans., Rear	✓	73	Water Level	
3	Engine Hrs.	292	39	Tires		74	Battery Cond.	
4	Oil Pressure	✓	40	Drive Sprockets	✓	75	Battery Level	
5	Water Temp.	✓	41	Track Rollers	✓	76	Battery Cables	
6	Amp. Meter	N/A	42	Tracks	✓	77	Starting Ability	
7	Fuel Level	3/4	43	Manuals	NO	78	Air System	
8	Air Pressure	N/A	44	Fire Extinguisher		79	Clutches	
9	Lo Air Warning	N/A	45	Electrical System	✓	80	Linings	
10	Brakes	✓	46	Exhaust System	✓	81	House rollers	
11	Parking Brake	✓	47	Steering	✓	82	Lubrication Cond.	
12	Throttle	✓	48	Cab Heater or Air Cond.	NA	83	Manuals	
13	Back Up Alarm	✓	49	Lift & Tilt Mech.	✓	84	Electrical System	
14	Horn	✓		**Upper Unit**		85	Exhaust System	
15	Wiper	N/A	50	General Appearance		86	Guards	
16	Mirrors	✓	51	Engine Hours		87	Cab Heater or Air Cond.	
17	Stop Lights	~~N/A~~	52	Inst. Panel Appearance			**Boom**	
18	Clearance Lights	~~N/A~~	53	Oil Pressure		88	Hyd. System	
19	Headlights	✓	54	Water Temperature		89	Boom Sections	
20	Turn Signals		55	Fuel Level		90	Wear Pads	
21	4-Way Flashers		56	Air Pressure		91	Main Cords	
22	General Engine Cond.	✓	57	Lo Air Warning		92	Lattice	
23	Oil Level	✓	58	Parking Brake		93	Pin Holes	
24	Water Level	✓	59	Horn		94	Pins	
25	Transmission Level	✓	60	Wipers		95	Cotter Pins	
26	Power Steering Level		61	Lights		96	Shackles & Sockets	
27	Battery Condition	✓	62	Load Indicator		97	Sheaves (All)	
28	Battery Level	✓	63	Capacity Chart		98	Load Hook Block	
29	Battery Cables	✓	64	Throttles (Hand & Foot)		99	Overhaul Ball	
30	Fan Belts	✓	65	House Lock		100	Boom Cable	
31	Lubrication Cond.	✓	66	Main Hoist Mech.		101	Pendent Cables	
32	Starting Ability	✓	67	Aux. Hoist Mech.		102	Main Load Cable	
33	Air System		68	Swing Mech.		103	Aux. Load Cable	
34	Hyd. System	✓	69	Boom Mech.		104	Boom Angle Indicator	
35	O'Rigger Boxes		70	Travel Mech.		105	Jib	
36	O'Rigger Beams		71	Boom Dog		106	Bucket	

NOTE: Use reverse side for comments.
Enter by Item No.

Are rated load capacities, recommended operating speeds, special hazard warnings or instructions, hand signals posted and visible to the operator?
☐ Yes ☐ No

CONTRACT	UNIT #	IT EQUIPMENT INSPECTION	DATE 9/26/94
EQUIPMENT LOADER-DOZER #T26		(Initial & Final)	INSP. BY [illegible]
OTHER		☒ Initial ☐ Final	APPROVED

Item No.	Lower Unit	(✓)	Item No.	Lower Unit (Continued)	(✓)	Item No.	Upper Unit (Continued)	(✓)
1	General Appearance	✓	37	O'Rigger Pads	N/A	72	Oil Level	
2	Mileage		38	Clutch, Trans., Rear	✓	73	Water Level	
3	Engine Hrs.	22	39	Tires	✓	74	Battery Cond.	
4	Oil Pressure	✓	40	Drive Sprockets		75	Battery Level	
5	Water Temp.	✓	41	Track Rollers		76	Battery Cables	
6	Amp. Meter	N/A	42	Tracks		77	Starting Ability	
7	Fuel Level	N/A	43	Manuals	NO	78	Air System	
8	Air Pressure	✓	44	Fire Extinguisher	✓	79	Clutches	
9	Lo Air Warning	N/A	45	Electrical System	✓	80	Linings	
10	Brakes	✓	46	Exhaust System	✓	81	House rollers	
11	Parking Brake	✓	47	Steering	✓	82	Lubrication Cond.	
12	Throttle	✓	48	Cab Heater or Air Cond.	N/A	83	Manuals	
13	Back Up Alarm	✓	49	Lift & Tilt Mech.	✓	84	Electrical System	
14	Horn	✓		**Upper Unit**		85	Exhaust System	
15	Wiper	✓	50	General Appearance		86	Guards	
16	Mirrors	✓	51	Engine Hours		87	Cab Heater or Air Cond.	
17	Stop Lights	N/A	52	Inst. Panel Appearance			**Boom**	
18	Clearance Lights	N/A	53	Oil Pressure		88	Hyd. System	
19	Headlights	N/A	54	Water Temperature		89	Boom Sections	
20	Turn Signals	N/A	55	Fuel Level		90	Wear Pads	
21	4-Way Flashers	N/A	56	Air Pressure		91	Main Cords	
22	General Engine Cond.	✓	57	Lo Air Warning		92	Lattice	
23	Oil Level	✓	58	Parking Brake		93	Pin Holes	
24	Water Level	✓	59	Horn		94	Pins	
25	Transmission Level	✓	60	Wipers		95	Cotter Pins	
26	Power Steering Level	N/A	61	Lights		96	Shackles & Sockets	
27	Battery Condition	✓	62	Load Indicator		97	Sheaves (All)	
28	Battery Level	✓	63	Capacity Chart		98	Load Hook Block	
29	Battery Cables	✓	64	Throttles (Hand & Foot)		99	Overhaul Ball	
30	Fan Belts	✓	65	House Lock		100	Boom Cable	
31	Lubrication Cond.	✓	66	Main Hoist Mech.		101	Pendent Cables	
32	Starting Ability	✓	67	Aux. Hoist Mech.		102	Main Load Cable	
33	Air System	✓	68	Swing Mech.		103	Aux. Load Cable	
34	Hyd. System Leak on lift hose		69	Boom Mech.		104	Boom Angle Indicator	
35	O'Rigger Boxes	N/A	70	Travel Mech.		105	Jib	
36	O'Rigger Beams	N/A	71	Boom Dog		106	Bucket	✓

NOTE: Use reverse side for comments. Enter by Item No.

Are rated load capacities, recommended operating speeds, special hazard warnings or instructions, hand signals posted and visible to the operator?
☐ Yes ☐ No

IT CORPORATION

DAILY VEHICLE INSPECTION

Project Name/Number: SEDA
Vehicle Type: D3C CAT
License Plate #: X651002914
Mileage: Hours 299.7

BRAKES	✓	HOSPITAL LOCATION MAP	NA
SEAT BELTS	✓	PROOF OF INSURANCE	NA
TIRES Tracks	✓	LIGHTS/REFLECTORS	✓
HORN	✓	WINDSHIELD WIPERS	NA
GLASS	NA	BACKUP ALARM	✓
MIRRORS	✓	FIRE EXTINGUISHER ?	X
DEFROSTER	NA	EXHAUST SYSTEM	✓
STEERING SYSTEM	✓	FLUID LEVELS	✓
ELECTRICAL SYSTEM	✓	VISIBLE DAMAGE	✓

✓ = OK
N/A = Not applicable
X = Defective

These items are to be checked each shift before operating this piece of equipment.
Report ALL items requiring repair to Supervisor.

NOTES:

OPERATOR/INSPECTOR: Eddie [illegible] 9-28-94
DATE

PT/08-93/REM_D:forms*inspect.tmp

IT CORPORATION

DAILY VEHICLE INSPECTION

Project Name/Number: SENA
Vehicle Type: IT 28F CAT London
License Plate #: 3C L00713
Mileage: Hours 23.0

BRAKES	✓	HOSPITAL LOCATION MAP	NA
SEAT BELTS	✓	PROOF OF INSURANCE	NA
TIRES	✓	LIGHTS/REFLECTORS	✓
HORN	✓	WINDSHIELD WIPERS	✓
GLASS	✓	BACKUP ALARM	✓
MIRRORS	✓	FIRE EXTINGUISHER	✓
DEFROSTER	✓	EXHAUST SYSTEM	✓
STEERING SYSTEM	✓	FLUID LEVELS	✓
ELECTRICAL SYSTEM	✓	VISIBLE DAMAGE	✓

✓ = OK
N/A = Not applicable
X = Defective

These items are to be checked each shift before operating this piece of equipment.
Report ALL items requiring repair to Supervisor.

NOTES: Low LR Tire

OPERATOR/INSPECTOR: [illegible] 9-28-94
DATE

PT/08-93/REM_D:forms*inspect.tmp

IT CORPORATION

PROJECT

EQUIPMENT INSPECTION LOG

Equipment Type: Seneca Army Depo D3C Dozer
Equipment Supplier: Syracuse Supply
I.D. #: 6SC 00291 Hours 309
Date: 9-30-94

BRAKES ✓	COOLING WATER ✓
AIR SYSTEM ✓	OPERATING CONTROLS ✓
TIRES/TRACKS ✓	LIGHTS/REFLECTORS ✓
HORN ✓	WINDSHEILD WIPERS ✓
SAFETY DEVICES ✓	FIRE EXTINGUISHER NO
GLASS ✓	BACKUP ALARM ✓
MIRRORS ✓	ENGINE OIL Add/Check
DEFROSTER ✓	EXHAUST SYSTEM ✓
STEERING SYSTEM ✓	FLUID LEVELS ✓
WIRE ROPE NA	MAINTAINENCE MANUALS ✓
APPEARANCE ✓	OPERATING MANUALS ✓
ELECTRICAL SYSTEM ✓	LOAD CHARTS ✓
INSPECTOR: [signature]	DATE: [signature]
APPROVED: (Health & Safety)	DATE:
PHOTOGRAPHS TAKEN	

sjk/123/eqlog1

IT CORPORATION

PROJECT

EQUIPMENT INSPECTION LOG

Equipment Type: SENICA ARMY DEPT IT28F LOADER
Equipment Supplier: Syracuse Supply
I.D. #: 3CL00 713
Date: 9-30-94

BRAKES	COOLING WATER ✓
AIR SYSTEM ✓	OPERATING CONTROLS ✓
TIRES/TRACKS ✓	LIGHTS/REFLECTORS ✓
HORN ✓	WINDSHEILD WIPERS ✓
SAFETY DEVICES ✓	FIRE EXTINGUISHER ✓
\SS ✓	BACKUP ALARM ✓
MIRRORS ✓	ENGINE OIL Add/Check
DEFROSTER ✓	EXHAUST SYSTEM ✓
STEERING SYSTEM ✓	FLUID LEVELS ✓
WIRE ROPE NA	MAINTAINENCE MANUALS ✓
APPEARANCE ✓	OPERATING MANUALS ✓
ELECTRICAL SYSTEM ✓	LOAD CHARTS ✓
INSPECTOR: Ed [illegible]	DATE: 9-30-94
APPROVED: (Health & Safety)	DATE:
PHOTOGRAPHS TAKEN	

sjk/123/eqlog1

IT CORPORATION

DAILY ~~VEHICLE~~ Equipment INSPECTION

Project Name/Number: Senica A. Depo
Vehicle Type: D3C Dozer
License Plate #: X65L 00291
Mileage: 312 hours

BRAKES ✓		HOSPITAL LOCATION MAP	NA
SEAT BELTS ✓		PROOF OF INSURANCE	NA
TIRES ✓		LIGHTS/REFLECTORS	✓
HORN ✓		WINDSHIELD WIPERS	NA
GLASS ✓		BACKUP ALARM	✓
MIRRORS ✓		FIRE EXTINGUISHER	NO
DEFROSTER NA		EXHAUST SYSTEM	✓
STEERING SYSTEM ✓		FLUID LEVELS	✓
ELECTRICAL SYSTEM ✓		VISIBLE DAMAGE	✓

✓ = OK
N/A = Not applicable
X = Defective

These items are to be checked each shift before operating this piece of equipment.
Report ALL items requiring repair to Supervisor.

NOTES:
OPERATOR/INSPECTOR: [illegible] 10-2-94 DATE

PT/08-93/REM_D:forms*inspect.tmp

IT CORPORATION

PROJECT

EQUIPMENT INSPECTION LOG

Equipment Type: PAYLOADER
Equipment Supplier:
I.D. #:
Date: 10-3-94

BRAKES	OK	COOLING WATER	OK
AIR SYSTEM	OK	OPERATING CONTROLS	OK
TIRES/TRACKS	OK	LIGHTS/REFLECTORS	OK
HORN	OK	WINDSHEILD WIPERS	OK
SAFETY DEVICES	OK	FIRE EXTINGUISHER	✓
ASS	OK	BACKUP ALARM	OK
MIRRORS	OK	ENGINE OIL ✓	Add/Check / NO
DEFROSTER	OK	EXHAUST SYSTEM	OK
STEERING SYSTEM	OK	FLUID LEVELS	OK
WIRE ROPE	NA	MAINTAINENCE MANUALS	✓
APPEARANCE	OK	OPERATING MANUALS	✓
ELECTRICAL SYSTEM	OK	LOAD CHARTS	✓
INSPECTOR: Grant Moore		DATE: 10-3-94	
APPROVED: (Health & Safety)		DATE:	
PHOTOGRAPHS TAKEN			

sjk/123/eqlog1

IT CORPORATION

PROJECT

EQUIPMENT INSPECTION LOG

Equipment Type: D3C CAT
Equipment Supplier: Syracuse S...
I.D. #: X6SL00291
Date: 10-4-94

BRAKES	✓	COOLING WATER	✓
AIR SYSTEM	✓	OPERATING CONTROLS	✓
TIRES/TRACKS	✓	LIGHTS/REFLECTORS	✓
HORN	✓	WINDSHEILD WIPERS	NA
SAFETY DEVICES	✓	FIRE EXTINGUISHER	NONE
GLASS	✓	BACKUP ALARM	✓
MIRRORS	✓	ENGINE OIL	Add/Check
DEFROSTER	NA	EXHAUST SYSTEM	✓
STEERING SYSTEM	✓	FLUID LEVELS	✓
WIRE ROPE	NA	MAINTAINENCE MANUALS	✓
APPEARANCE	✓	OPERATING MANUALS	✓
ELECTRICAL SYSTEM		LOAD CHARTS	✓
INSPECTOR: Ed Lo		DATE: 10-4-94	
APPROVED: (Health & Safety)		DATE:	
PHOTOGRAPHS TAKEN			

sjk/123/eqlog1

IT CORPORATION

PROJECT

EQUIPMENT INSPECTION LOG

Equipment Type: PayLoader IT28F CAT
Equipment Supplier: Syracuse Supply Comp
I.D. #: X3CL00713
Date: 10-4-94

BRAKES ✓	COOLING WATER ✓
AIR SYSTEM ✓	OPERATING CONTROLS ✓
TIRES/TRACKS ✓	LIGHTS/REFLECTORS ✓
HORN ✓	WINDSHEILD WIPERS ✓
SAFETY DEVICES ✓	FIRE EXTINGUISHER ✓
SS ✓	BACKUP ALARM ✓
MIRRORS ✓	ENGINE OIL OK Add/Check None
DEFROSTER ✓	EXHAUST SYSTEM ✓
STEERING SYSTEM ✓	FLUID LEVELS ✓
WIRE ROPE N/A	MAINTAINENCE MANUALS ✓
APPEARANCE OK	OPERATING MANUALS ✓
ELECTRICAL SYSTEM ✓	LOAD CHARTS N/A
INSPECTOR: F. Moore	DATE: 10-4-94
APPROVED: (Health & Safety)	DATE:
PHOTOGRAPHS TAKEN	

sjk/123/eqlog1

IT CORPORATION

PROJECT

EQUIPMENT INSPECTION LOG

Equipment Type: IT 28F

Equipment Supplier: Syracuse Supply

I.D. #: X3C R00713

Date: 10-15-94

BRAKES	✓	COOLING WATER	✓
AIR SYSTEM	✓	OPERATING CONTROLS	✓
TIRES/TRACKS	✓	LIGHTS/REFLECTORS	✓
HORN	✓	WINDSHIELD WIPERS	✓
SAFETY DEVICES	✓	FIRE EXTINGUISHER	✓
GLASS	✓	BACKUP ALARM	✓
MIRRORS	✓	ENGINE OIL ✓	Add/Check
DEFROSTER	✓	EXHAUST SYSTEM	✓
STEERING SYSTEM	✓	FLUID LEVELS	✓
WIRE ROPE	✓	MAINTAINENCE MANUALS	✓
APPEARANCE	✓	OPERATING MANUALS	✓
ELECTRICAL SYSTEM	✓	LOAD CHARTS	✓
INSPECTOR: Ed Fl		DATE: 10-15-94	
APPROVED: (HEALTH &SAFETY)		DATE: 15OCT94	
PHOTOGRAPHS TAKEN			

IT CORPORATION

PROJECT

EQUIPMENT INSPECTION LOG

Equipment Type: D3C Dozer

Equipment Supplier: Syracuse Supply

I.D. #: X6SL00291

Date: 10-15-94

BRAKES	✓	COOLING WATER	✓
AIR SYSTEM	✓	OPERATING CONTROLS	✓
TIRES/TRACKS	✓	LIGHTS/REFLECTORS	✓
HORN	✓	WINDSHIELD WIPERS	NA
SAFETY DEVICES	✓	FIRE EXTINGUISHER	✓
GLASS	✓	BACKUP ALARM	✓
MIRRORS	✓	ENGINE OIL	Add/Check
DEFROSTER	NA	EXHAUST SYSTEM	✓
STEERING SYSTEM	✓	FLUID LEVELS	✓
WIRE ROPE	NA	MAINTAINENCE MANUALS	✓
APPEARANCE	✓	OPERATING MANUALS	✓
ELECTRICAL SYSTEM	✓	LOAD CHARTS	✓
INSPECTOR:	E L Fleming	DATE:	10-15 94
APPROVED:	(HEALTH & SAFETY)	DATE:	15OCT94
PHOTOGRAPHS TAKEN			

IT CORPORATION

PROJECT

EQUIPMENT INSPECTION LOG

Equipment Type: CAT E120B

Equipment Supplier: Syracuse Supply

I.D. #: 65F01147

Date: 10-17-94

BRAKES	✓	COOLING WATER	✓
AIR SYSTEM	✓	OPERATING CONTROLS	✓
TIRES/TRACKS	✓	LIGHTS/REFLECTORS	✓
HORN	✓	WINDSHIELD WIPERS	✓
SAFETY DEVICES	✓	FIRE EXTINGUISHER	✓
GLASS	✓	BACKUP ALARM	✓
MIRRORS	✓	ENGINE OIL	Add/Check
DEFROSTER	✓	EXHAUST SYSTEM	✓
STEERING SYSTEM	✓	FLUID LEVELS	✓
WIRE ROPE	NA	MAINTAINENCE MANUALS	✓
APPEARANCE	✓	OPERATING MANUALS	✓
ELECTRICAL SYSTEM	✓	LOAD CHARTS	✓
INSPECTOR:	[illegible]	DATE:	10-17-94
APPROVED: (HEALTH & SAFETY)	[illegible]	DATE:	17OCT94
PHOTOGRAPHS TAKEN			

IT CORPORATION PROJECT

EQUIPMENT INSPECTION LOG

Equipment Type: CAT Loader IT 28F

Equipment Supplier: S.S.F.

I.D. #: IT 28F X3CR00713

Date: 10-17-94

BRAKES	✓	COOLING WATER	✓
AIR SYSTEM	✓	OPERATING CONTROLS	✓
TIRES/TRACKS	✓	LIGHTS/REFLECTORS	✓
HORN	✓	WINDSHIELD WIPERS	✓
SAFETY DEVICES	✓	FIRE EXTINGUISHER	✓
GLASS	✓	BACKUP ALARM	✓
MIRRORS	✓	ENGINE OIL ✓ Add/Check	check
DEFROSTER	✓	EXHAUST SYSTEM	✓
STEERING SYSTEM	✓	FLUID LEVELS	✓
WIRE ROPE	N/A	MAINTAINENCE MANUALS	✓
APPEARANCE	✓	OPERATING MANUALS	✓
ELECTRICAL SYSTEM	✓	LOAD CHARTS	✓
INSPECTOR: Hopkins		DATE: 10-17-94	
APPROVED: Andrew Kahn (HEALTH & SAFETY)		DATE: 17OCT94	
PHOTOGRAPHS TAKEN			

IT CORPORATION

PROJECT

EQUIPMENT INSPECTION LOG

Equipment Type: CAT 966 F

Equipment Supplier: SYRACUSE

I.D. #: ISL00585

Date: 10-17-94

BRAKES	✓	COOLING WATER	
AIR SYSTEM	✓	OPERATING CONTROLS	✓
TIRES/TRACKS	✓	LIGHTS/REFLECTORS	✓
HORN	✓	WINDSHIELD WIPERS	✓
SAFETY DEVICES	✓	FIRE EXTINGUISHER	✓
GLASS	✓	BACKUP ALARM	✓
MIRRORS	✓	ENGINE OIL ✓	Add/Check ✓
DEFROSTER	✓	EXHAUST SYSTEM	✓
STEERING SYSTEM	✓	FLUID LEVELS	✓
WIRE ROPE	NA	MAINTAINENCE MANUALS	✓
APPEARANCE	Good	OPERATING MANUALS	✓
ELECTRICAL SYSTEM	✓	LOAD CHARTS	NA
INSPECTOR: Frank Moore		DATE: 10-17-94	
APPROVED: Andrew Johnson (HEALTH & SAFETY)		DATE: 17OCT94	
PHOTOGRAPHS TAKEN			

IT CORPORATION

PROJECT

EQUIPMENT INSPECTION LOG

Equipment Type: IT 18 F CCAT

Equipment Supplier: SYRACUSE SUPPLY SERVICE

I.D. #: 6ZF00389

Date: 10-17-94

BRAKES	✓	COOLING WATER	✓
AIR SYSTEM	✓	OPERATING CONTROLS	✓
TIRES/TRACKS	✓	LIGHTS/REFLECTORS	✓
HORN	✓	WINDSHIELD WIPERS	✓
SAFETY DEVICES	✓	FIRE EXTINGUISHER	✓
GLASS	✓	BACKUP ALARM	
MIRRORS	✓	ENGINE OIL ✓	Add/Check ✓
DEFROSTER	✓	EXHAUST SYSTEM	✓
STEERING SYSTEM	✓	FLUID LEVELS	✓
WIRE ROPE	NA	MAINTAINENCE MANUALS	NA
APPEARANCE	GOOD	OPERATING MANUALS	✓
ELECTRICAL SYSTEM	✓	LOAD CHARTS	NA
INSPECTOR:	Frank Marce	DATE:	
APPROVED:	Andrew Johnson (HEALTH & SAFETY)	DATE:	17OCT94
PHOTOGRAPHS TAKEN			

IT CORPORATION

PROJECT

EQUIPMENT INSPECTION LOG

Equipment Type: D3C DOZER

Equipment Supplier: Syracuse Supply

I.D. #: X6SL00291

Date: 10-17-94

BRAKES	✓	COOLING WATER	✓
AIR SYSTEM	✓	OPERATING CONTROLS	✓
TIRES/TRACKS	✓	LIGHTS/REFLECTORS	✓
HORN	✓	WINDSHIELD WIPERS	NA
SAFETY DEVICES	✓	FIRE EXTINGUISHER	✓
GLASS	✓	BACKUP ALARM	✓
MIRRORS	✓	ENGINE OIL	Add/Check
DEFROSTER	NA	EXHAUST SYSTEM	✓
STEERING SYSTEM	✓	FLUID LEVELS	✓
WIRE ROPE	NA	MAINTAINENCE MANUALS	✓
APPEARANCE	✓	OPERATING MANUALS	✓
ELECTRICAL SYSTEM	✓	LOAD CHARTS	✓
INSPECTOR: [signature]		DATE: 10-17-94	
APPROVED: [signature] (HEALTH & SAFETY)		DATE: 17 OCT 94	
PHOTOGRAPHS TAKEN			

IT CORPORATION

PROJECT

EQUIPMENT INSPECTION LOG

Equipment Type: TRACK HOE

Equipment Supplier:

I.D. #:

Date:

BRAKES	GOOD	COOLING WATER	
AIR SYSTEM		OPERATING CONTROLS	
TIRES/TRACKS		LIGHTS/REFLECTORS	
HORN		WINDSHIELD WIPERS	
SAFETY DEVICES		FIRE EXTINGUISHER	
GLASS		BACKUP ALARM	
MIRRORS		ENGINE OIL	Add/Check
DEFROSTER		EXHAUST SYSTEM	
STEERING SYSTEM		FLUID LEVELS	
WIRE ROPE		MAINTAINENCE MANUALS	
APPEARANCE		OPERATING MANUALS	
ELECTRICAL SYSTEM		LOAD CHARTS	
INSPECTOR:		DATE:	
APPROVED: (HEALTH & SAFETY)		DATE:	18 OCT 94
PHOTOGRAPHS TAKEN			

IT CORPORATION

PROJECT

EQUIPMENT INSPECTION LOG

Equipment Type: [illegible]

Equipment Supplier: [illegible]

I.D. #: [illegible]

Date: [illegible]

BRAKES	✓	COOLING WATER	
AIR SYSTEM	✓	OPERATING CONTROLS	✓
TIRES/TRACKS	✓	LIGHTS/REFLECTORS	✓
HORN	✓	WINDSHIELD WIPERS	✓
SAFETY DEVICES	✓	FIRE EXTINGUISHER	✓
GLASS	✓	BACKUP ALARM	✓
MIRRORS	✓	ENGINE OIL	✓ Add/Check
DEFROSTER	✓	EXHAUST SYSTEM	✓
STEERING SYSTEM	✓	FLUID LEVELS	✓
WIRE ROPE	[illegible]	MAINTAINENCE MANUALS	✓
APPEARANCE	[illegible]	OPERATING MANUALS	✓
ELECTRICAL SYSTEM	✓	LOAD CHARTS	
INSPECTOR: [illegible]		DATE: [illegible]	
APPROVED: [illegible] (HEALTH &SAFETY)		DATE: 18OCT94	
PHOTOGRAPHS TAKEN			

IT CORPORATION

PROJECT

EQUIPMENT INSPECTION LOG

Equipment Type: [illegible]

Equipment Supplier: [illegible]

I.D. #: [illegible]

Date: [illegible]

BRAKES	✓	COOLING WATER	✓
AIR SYSTEM	✓	OPERATING CONTROLS	✓
TIRES/TRACKS	✓	LIGHTS/REFLECTORS	✓
HORN	✓	WINDSHIELD WIPERS	✓
SAFETY DEVICES	✓	FIRE EXTINGUISHER	✓
GLASS	✓	BACKUP ALARM	✓
MIRRORS	✓	ENGINE OIL ✓	Add/Check
DEFROSTER	✓	EXHAUST SYSTEM	✓
STEERING SYSTEM	✓	FLUID LEVELS	✓
WIRE ROPE	N/A	MAINTAINENCE MANUALS	✓
APPEARANCE	✓	OPERATING MANUALS	✓
ELECTRICAL SYSTEM	✓	LOAD CHARTS	✓
INSPECTOR: [illegible]		DATE: [illegible]	
APPROVED: [signature] (HEALTH &SAFETY)		DATE: 18 OCT 94	
PHOTOGRAPHS TAKEN			

IT CORPORATION

PROJECT

EQUIPMENT INSPECTION LOG

Equipment Type: CAT 966

Equipment Supplier: Sparrow Service Supply

I.D. #: X3CR00713

Date: 10-19-94

BRAKES	✓	COOLING WATER	✓
AIR SYSTEM	✓	OPERATING CONTROLS	✓
TIRES/TRACKS	✓	LIGHTS/REFLECTORS	✓
HORN	✓	WINDSHIELD WIPERS	✓
SAFETY DEVICES	✓	FIRE EXTINGUISHER	✓
GLASS	✓	BACKUP ALARM	✓
MIRRORS	✓	ENGINE OIL ✓	Add/Check ✓
DEFROSTER	✓	EXHAUST SYSTEM	✓
STEERING SYSTEM	✓	FLUID LEVELS	✓
WIRE ROPE	N/A	MAINTAINENCE MANUALS	✓
APPEARANCE	Good	OPERATING MANUALS	✓
ELECTRICAL SYSTEM	✓	LOAD CHARTS	N/A
INSPECTOR:	J. Moore	DATE:	10-[illegible]-94
APPROVED:	Andrew Johnson (HEALTH & SAFETY)	DATE:	19OCT94
PHOTOGRAPHS TAKEN			

IT CORPORATION

PROJECT

EQUIPMENT INSPECTION LOG

Equipment Type: Loader

Equipment Supplier: SSC

I.D. #: IT 28F

Date: 10-19-94

BRAKES	✓	COOLING WATER	✓
AIR SYSTEM	✓	OPERATING CONTROLS	✓
TIRES/TRACKS	✓	LIGHTS/REFLECTORS	✓
HORN	✓	WINDSHIELD WIPERS	✓
SAFETY DEVICES	✓	FIRE EXTINGUISHER	✓
GLASS	✓	BACKUP ALARM	✓
MIRRORS	✓	ENGINE OIL ✓ Add/Check	check
DEFROSTER	✓	EXHAUST SYSTEM	✓
STEERING SYSTEM	✓	FLUID LEVELS	✓
WIRE ROPE	N/A	MAINTAINENCE MANUALS	✓
APPEARANCE	✓	OPERATING MANUALS	✓
ELECTRICAL SYSTEM	✓	LOAD CHARTS	✓
INSPECTOR: Hopkins		DATE: 10-19-94	
APPROVED: (HEALTH & SAFETY)		DATE: 19 OCT 94	
PHOTOGRAPHS TAKEN			

IT CORPORATION

PROJECT

EQUIPMENT INSPECTION LOG

Equipment Type: [illegible]

Equipment Supplier: [illegible]

I.D. #: 2Z-0611

Date: [illegible]

BRAKES	✓	COOLING WATER	✓
AIR SYSTEM	✓	OPERATING CONTROLS	✓
TIRES/TRACKS	✓	LIGHTS/REFLECTORS	✓
HORN	✓	WINDSHIELD WIPERS	✓
SAFETY DEVICES	✓	FIRE EXTINGUISHER	✓
GLASS	✓	BACKUP ALARM	✓
MIRRORS	✓	ENGINE OIL	Add/Check
DEFROSTER	✓	EXHAUST SYSTEM	✓
STEERING SYSTEM	✓	FLUID LEVELS	✓
WIRE ROPE	N/A	MAINTAINENCE MANUALS	✓
APPEARANCE	✓	OPERATING MANUALS	✓
ELECTRICAL SYSTEM	✓	LOAD CHARTS	✓
INSPECTOR: [illegible]		DATE: [illegible]	
APPROVED: Andrew Johnson (HEALTH & SAFETY)		DATE: 19OCT94	
PHOTOGRAPHS TAKEN			

PROJECT NAME: Seneca Army Depot Ash Landfill

PROJECT NO. 579200

DELIVERY ORDER NO. C1

HEAVY EQUIPMENT
SAFETY INSPECTION CHECKLIST

For Cranes, Shovels, Derricks, Draglines, Cranes equipped with Pile Drivers, Pavers, Scrapers, Graders, Pans, Loaders, Dump Trucks, and similar heavy equipment.

INSTRUCTIONS: To be completed by contractor in accordance with contract requirement (Reference Corps of Engineers Safety and Health Requirements Manual, April 1981, Paragraphs 18.A.01 and 18.C.01).

Contractor: IT CORPORATION		Contract No.:
Type of Equipment: FRONT END LOADER	Equipment No.:	Date of Inspection:
Type of Inspection: ☑ Initial ☐ Annual ☐ Critical Lift or Operation		
Inspected By: (Signature) RICHARD FULSUM	Approved By:	

ITEM	YES (X)	NO (X)	N/A (X)
1. Is a notice of minimum required clearance for high-voltage lines posted at operator's position when operations are adjacent to overhead lines?	X		
2. Are belts, gears, shafts, pulleys, sprockets, drums, flywheels, chains, or other reciprocating or rotating parts adequately guarded?	X		
3. Are fuel tanks located so that spills or overflows will not come in contact with engine, exhaust, or electrical equipment?	X		
4. Are all hot surfaces exposed to accidental contact suitable guarded or insulated to prevent injury or fire?	X		
5. Are exhausts and discharges so directed as not to endanger workmen or obstruct view of operator?	X		
6. Are platforms, catwalks, steps, handholds, and guardrails provided to ensure safe footing and accessways?	X		
7. Is adequate protection for operator provided against the elements, falling or flying objects, swinging loads, backlash of winch cables, and similar hazards?	X		
8. For those pieces of equipment which require rollover protection (ROP), is there a certificate or permanently affixed information from either the (1) manufacturer of the piece of equipment, (2) the manufacturer of the ROP, or (3) a registered professional engineer attesting to the adequacy of the ROP?	X		
9. If equipment is to be operated on highways, is it equipped with turn signals?	X		
10. Are positive stops or limiting devices provided for equipment operated on rails?			NA

ITEM	YES (X)	NO (X)	N/A (X)
11. Is a barricade provided where there is danger to persons from the swing radius of the rotating superstructure of a crane?			NA
12. Is all heavy duty haulage equipment equipped with an operable emergency braking system which will automatically stop the equipment upon failure in the service brake system?	X		
13. Is a safe load capacity chart determined by performance test, recommended operating speeds, and special hazards posted in the cab of the crane?	X		
14. Do all points requiring lubrication during operation have such fittings located or guarded in such manner that personnel servicing the equipment are protected from injury?	X		
15. Do all modifications, extensions, replacement parts, and/or repairs to equipment maintain the same factor of safety as the originally manufactured equipment?	X		
16. Does a visual inspection reveal any structural members bent or rusted, or do they otherwise show signs of damage?	X		
17. Are all load drums on load housing equipment with dogs, paws, or other positive locking devices?	X		
18. Is there sufficient cable to allow two full wraps of cable on drums at all working positions?			NA
19. Is hoist braking equipment capable of stopping, lowering, and holding a load of at least the full test load?			NA
20. Are traveling rail mounted gantry cranes (except floor operated type) equipped with a warning device which will sound continuously when crane is traveling?			NA
21. Are all hose connections to pileriver hammers, pile ejectors, and jet pipes equipped with a safety lashing?			NA
22. Are the hanging or swinging pileriving leads equipped with a fixed ladder?			NA
23. Are fixed pileriver leads equipped with decked landings having guard rails, intermediate rails, and toeboards? Are the fixed leads provided with a fixed ladder or stairs for access to landings and head blocks?			NA
24. Are the pileriver leads equipped with a stop block to prevent the hammer from being raised against the head block?			NA
25. Are fixed ladders more than 20 feet in height on pileriver leads provided with a ladder climbing device?			NA
26. Are all wire ropes or cables in good operating condition?			NA
27. Are drums, sheaves, sheave pins, and pulleys smooth and free of defects?			NA
28. Are wire rope sockets, splices, thimbles, and clips adequate and properly applied?			NA
29. Are hooks, shackles, rings, eyes, and other fittings in good condition?			NA
30. Are running lines of hoisting equipment exposed to hazardous contact adequately guarded?			NA
31. Are fueling cans used with this equipment approved type safety cans?	X		

ITEM	YES (X)	NO (X)	N/A (X)
32. Are adequate Class B or Class C extinguishers installed on off-the-road construction equipment charged, tagged, and ready for use, suitably placed, and distinctly marked, and is accessibility to them unobstructed?	X		
33. Performance Test prior to being placed in operation the following cranes and derricks will be given a performance test to demonstrate the strength, stability, capability, and adequacy of power, brakes, clutches, and controls to safely maneuver the specified percent of the maximum anticipated load at the maximum boom radius to be used in accomplishing the current contract operations. This test will be the basis upon which the equipment is rated for the current contract. Particular attention shall be given that under the circumstances with the maximum anticipated load used for performance test load exceed the manufacturers rating. The contractor will provide the test weights. A. Crawler truck and wheel mounted cranes 125% of the maximum anticipated load. B. Portal, hammerhead, and tower cranes 125% of the maximum anticipated load. C. Pedestal mounted cranes and derricks 125% of the maximum anticipated load D. Floating cranes 150% of the maximum anticipated load Date._____ Weight of Performance Test Load: _____ tons Length of Boom: _____ feet Maximum radius at which test performed: _____ feet			NA
34. Are adequate guardrails provided around the skids of pavers, concrete mixers, and similar equipment?	X		
35. Are all motor vehicles equipped as follows:	X		
A. Directional signal lights both front and rear?	X		
B. Two headlights, one on each side, one red tail light, and one red or amber stop light for operation between sunset and sunrise when applicable?	X		
36. Is service or maintenance equipment, which will be parked or moving slower than normal traffic on haul roads and night, equipped with a flashing yellow light mounted to be visible from all directions?	X		
37. Are truck and crawler mounted cranes mounted on barges securely attached to the barge, or are control barriers provided to prevent equipment from running off barge where barge stability is such as to permit limited travel?			NA
38. Are brakes on wheeled equipment in good operating condition?	X		
39. Are windshields on equipment provided with windshield wipers in proper operating condition?	X		
40. Is all glass installed in cabs and bodies of vehicles and equipment "safety glass"?	X		
41. Are trucks and similar equipment equipped with speedometers in working condition?	X		
42. Are running boards and steps of vehicles provided with non-slip surfaces?	X		

ITEM	YES (X)	NO (X)	N/A (X)
43. Are dump bodies provided with hinged struts or other suitable devices for locking body in raised position?			N/A
44. Are tailgate dumping devices so arranged that operator will be in the clear while dumping load?			NA
45. Is engine equipped with power-operated starting device in operative condition?	X		
46. Is air-pressure gauge in operative condition on equipment with air brake?	X		
47. Is air tank equipped with drain valve in an accessible position?			NA
48. Are towing devices structurally adequate and properly mounted?	X		
49. If equipment is to operate on airfield landing areas, is it equipped with proper flags of proper size and color?			NA
50. Are cables for electrically powered equipment in good condition and are insulated hot sticks available for handling cables?	X		
51. Is all self-propelled construction equipment except light service trucks, panels, pickups, station wagons, and crawler-type cranes, power shovels, backhoes, and draglines equipped with a reverse signal alarm which will operate automatically when the vehicle moves in reverse and will give suitable audible sound alarm at certain intervals for the conditions and circumstances under which the equipment is operated?	X		
52. Construction equipment equipped with ROPS shall also have installed a safety belt for the operator.	X		
53. Are operators able to read and understand signs, notices, operating instructions, and signal code to be used? A. Does operator have any known physical or mental condition which would be detrimental to safe operation of the equipment? B. Is his vision and hearing good?	X		
54. Has all broken or cracked glass been replaced?			X
55. Remarks (Enter action taken):			

PROJECT NAME: SEDA, Ash Landfill
PROJECT NO. 519200
DELIVERY ORDER NO. 01

HEAVY EQUIPMENT SAFETY INSPECTION CHECKLIST

For Cranes, Shovels, Derricks, Draglines, Cranes equipped with Pile Drivers, Pavers, Scrapers, Graders, Pans, Loaders, Dump Trucks, and similar heavy equipment.

INSTRUCTIONS: To be completed by contractor in accordance with contract equipment (Reference Corps of Engineers Safety and Health Requirements Manual, April 1981, Paragraphs 18.A.01 and 18.C.01).

Contractor: IT CORPORATION		Contract No.: DACW45-94-D0054
Type of Equipment: D3C	Equipment No.: X65L00291	Date of Inspection: 10-20-94
Type of Inspection: ☐ Initial ☐ Annual ☐ Critical Lift or Operation		
Inspected By: (Signature) Eddie Fleming	Approved By: [illegible]	

ITEM	YES (X)	NO (X)	N/A (X)
1. Is a notice of minimum required clearance for high-voltage lines posted at operator's position when operations are adjacent to overhead lines?	X		
2. Are belts, gears, shafts, pulleys, sprockets, drums, flywheels, chains, or other reprocating or rotating parts adequately guarded?	X		
3. Are fuel tanks located so that spills or overflows will not come in contact with engine, exhaust, or electrical equipment?	X		
4. Are all hot surfaces exposed to accidental contact suitable guarded or insulated to prevent injury or fire?	X		
5. Are exhausts and discharges so directed as not to endanger workmen or obstruct view of operator?	X		
6. Are platforms, catwalks, steps, handholds, and guardrails provided to ensure safe footing and accessways?	X		
7. Is adequate protection for operator provided against the elements, falling or flying objects, swinging loads, backlash of winch cables, and similar hazards?	X		
8. For those pieces of equipment which require rollover protection (ROP), is there a certificate or permanently affixed information from either the (1) manufacturer of the piece of equipment, (2) the manufacturer of the ROP, or (3) a registered professional engineer attesting to the adequacy of the ROP?	X		
9. If equipment is to be operated on highways, is it equipped with turn signals?			X
10. Are positive stops or limiting devices provided for equipment operated on rails?	X		

ITEM	YES (X)	NO (X)	N/A (X)
11. Is a barricade provided where there is danger to persons from the swing radius of the rotating superstructure of a crane?			X
12. Is all heavy duty haulage equipment equipped with an operable emergency braking system which will automatically stop the equipment upon failure in the service brake system?	X		
13. Is a safe load capacity chart determined by performance test, recommended operating speeds, and special hazards posted in the cab of the crane?			X
14. Do all points requiring lubrication during operation have such fittings located or guarded in such manner that personnel servicing the equipment are protected from injury?	X		
15. Do all modifications, extensions, replacement parts, and/or repairs to equipment maintain the same factor of safety as the originally manufactured equipment?	X		
16. Does a visual inspection reveal any structural members bent or rusted, or do they otherwise show signs of damage?	X		
17. Are all load drums on load hoisting equipment with dogs, paws, or other positive locking devices?			X
18. Is there sufficient cable to allow two full wraps of cable on drums at all working positions?			X
19. Is hoist braking equipment capable of stopping, lowering, and holding a load of at least the full test load?			X
20. Are traveling rail mounted gantry cranes (except floor operated type) equipped with a warning device which will sound continuously when crane is traveling?	X		
21. Are all hose connections to piledriver hammers, pile ejectors, and jet pipes equipped with a safety lashing?			X
22. Are the hanging or swinging piledriving leads equipped with a fixed ladder?			X
23. Are fixed piledriver leads equipped with decked landings having guard rails, intermediate rails, and toeboards? Are the fixed leads provided with a fixed ladder or stairs for access to landings and head blocks?	X		
24. Are the piledriver leads equipped with a stop block to prevent the hammer from being raised against the head block?			X
25. Are fixed ladders more than 20 feet in height on piledriver leads provided with a ladder climbing device?			X
26. Are all wire ropes or cables in good operating condition?			X
27. Are drums, sheaves, sheave pins, and pulleys smooth and free of defects?			X
28. Are wire rope sockets, splices, thimbles, and clips adequate and properly applied?	X		
29. Are hooks, shackles, rings, eyes, and other fittings in good condition?	X		
30. Are running lines of hoisting equipment exposed to hazardous contact adequately guarded?			X
31. Are fueling cans used with this equipment approved type safety cans?	X		

ITEM	YES (X)	NO (X)	N/A (X)
32. Are adequate Class B or Class C extinguishers installed on off-the-road construction equipment charged, tagged, and ready for use, suitably placed, and distinctly marked, and is accessibility to them unobstructed?	X		
33. Performance Test prior to being placed in operation the following cranes and derricks will be given a performance test to demonstrate the strength, stability, capability, and adequacy of power, brakes, clutches, and controls to safely maneuver the specified percent of the maximum anticipated load at the maximum boom radius to be used in accomplishing the current contract operations. This test will be the basis upon which the equipment is rated for the current contract. Particular attention shall be given that under the circumstances will the maximum anticipated load used for performance test load exceed the manufacturers rating. The contractor will provide the test weights. A. Crawler truck and wheel mounted cranes 125% of the maximum anticipated load. B. Portal, hammerhead, and tower cranes 125% of the maximum anticipated load. C. Pedestal mounted cranes and derricks 125% of the maximum anticipated load. D. Floating cranes 150% of the maximum anticipated load Date:_____ Weight of Performance Test Load: _____ tons Length of Boom: _____ feet Maximum radius at which test performed: _____ feet			
34. Are adequate guardrails provided around the skips of pavers, concrete mixers, and similar equipment?			X
35. Are all motor vehicles equipped as follows: A. Directional signal lights both front and rear? B. Two headlights, one on each side, one red tail light, and one red or amber stop light for operation between sunset and sunrise when applicable?			X
36. Is service or maintenance equipment, which will be parked or moving slower than normal traffic on haul roads and night, equipped with a flashing yellow light mounted to be visible from all directions?			X
37. Are truck and crawler mounted cranes mounted on barges securely attached to the barge, or are control barriers provided to prevent equipment from running off barge where barge stability is such as to permit limited travel?			X
38. Are brakes on wheeled equipment in good operating condition?	X		
39. Are windshields on equipment provided with windshield wipers in proper operating condition?			X
40. Is all glass installed in cabs and bodies of vehicles and equipment "safety glass"?			X
41. Are trucks and similar equipment equipped with speedometers in working condition?			X
42. Are running boards and steps of vehicles provided with non-slip surfaces?			X

ITEM	YES (X)	NO (X)	N/A (X)
43. Are dump bodies provided with hinged struts or other suitable devices for locking body in raised position?			X
44. Are tailgate dumping devices so arranged that operator will be in the clear while dumping load?			X
45. Is engine equipped with power-operated starting device in operative condition?	X		
46. Is air-pressure gauge in operative condition on equipment with air brake?			X
47. Is air tank equipped with drain valve in an accessible position?			X
48. Are towing devices structurally adequate and properly mounted?	X		
49. If equipment is to operate on airfield landing areas, is it equipped with proper flags of proper size and color?			X
50. Are cables for electrically powered equipment in good condition and are insulated hot sticks available for handling cables?			X
51. Is all self-propelled construction equipment except light service trucks, panels, pickups, station wagons, and crawler-type cranes, power shovels, backhoes, and draglines equipped with a reverse signal alarm which will operate automatically when the vehicle moves in reverse and will give suitable audible sound alarm at certain intervals for the conditions and circumstances under which the equipment is operated?	X		
52. Construction equipment equipped with ROPS shall also have installed a safety belt for the operator.	X		
53. Are operators able to read and understand signs, notices, operating instructions, and signal code to be used? A. Does operator have any known physical or mental condition which would be detrimental to safe operation of the equipment? B. Is his vision and hearing good?	X		
54. Has all broken or cracked glass been replaced?			X
55. Remarks (Enter action taken):			

PROJECT NAME: SEDA, Ash Land Fill

PROJECT NO. 519200

DELIVERY ORDER NO. 01

HEAVY EQUIPMENT
SAFETY INSPECTION CHECKLIST

For Cranes, Shovels, Derricks, Draglines, Cranes equipped with Pile Drivers, Pavers, Scrapers, Graders, Pans, Loaders, Dump Trucks, and similar heavy equipment.

INSTRUCTIONS: To be completed by contractor in accordance with contract equipment (Reference Corps of Engineers Safety and Health Requirements Manual, April 1981, Paragraphs 18.A.01 and 18.C.01).

Contractor: IT CORPORATION		Contract No.: [illegible]
Type of Equipment: E 120 B	Equipment No.: 2ZF06111	Date of Inspection: 10-20-94
Type of Inspection: ☐ Initial ☐ Annual	☐ Critical Lift or Operation	
Inspected By: (Signature) Eddie Fleming	Approved By:	

ITEM	YES (X)	NO (X)	N/A (X)
1. Is a notice of minimum required clearance for high-voltage lines posted at operator's position when operations are adjacent to overhead lines?	X		
2. Are belts, gears, shafts, pulleys, sprockets, drums, flywheels, chains, or other reprocating or rotating parts adequately guarded?	X		
3. Are fuel tanks located so that spills or overflows will not come in contact with engine, exhaust, or electrical equipment?	X		
4. Are all hot surfaces exposed to accidental contact suitable guarded or insulated to prevent injury or fire?	X		
5. Are exhausts and discharges so directed as not to endanger workmen or obstruct view of operator?	X		
6. Are platforms, catwalks, steps, handholds, and guardrails provided to ensure safe footing and accessways?	X		
7. Is adequate protection for operator provided against the elements, falling or flying objects, swinging loads, backlash of winch cables, and similar hazards?	X		
8. For those pieces of equipment which require rollover protection (ROP), is there a certificate or permanently affixed information from either the (1) manufacturer of the piece of equipment, (2) the manufacturer of the ROP, or (3) a registered professional engineer attesting to the adequacy of the ROP?	X		
9. If equipment is to be operated on highways, is it equipped with turn signals?			X
10. Are positive stops or limiting devices provided for equipment operated on rails?	X		

ITEM	YES (X)	NO (X)	N/A (X)
11. Is a barricade provided where there is danger to persons from the swing radius of the rotating superstructure of a crane?	X		
12. Is all heavy duty haulage equipment equipped with an operable emergency braking system which will automatically stop the equipment upon failure in the service brake system?	X		
13. Is a safe load capacity chart determined by performance test, recommended operating speeds, and special hazards posted in the cab of the crane?	X		
14. Do all points requiring lubrication during operation have such fittings located or guarded in such manner that personnel servicing the equipment are protected from injury?	X		
15. Do all modifications, extensions, replacement parts, and/or repairs to equipment maintain the same factor of safety as the originally manufactured equipment?	X		
16. Does a visual inspection reveal any structural members bent or rusted, or do they otherwise show signs of damage?	X		
17. Are all load drums on load housing equipment with dogs, paws, or other positive locking devices?	X		
18. Is there sufficient cable to allow two full wraps of cable on drums at all working positions?			X
19. Is hoist braking equipment capable of stopping, lowering, and holding a load of at least the full test load?			X
20. Are traveling rail mounted gantry cranes (except floor operated type) equipped with a warning device which will sound continuously when crane is traveling?	X		
21. Are all hose connections to piledriver hammers, pile ejectors, and jet pipes equipped with a safety lashing?	X		
22. Are the hanging or swinging piledriving leads equipped with a fixed ladder?	X		
23. Are fixed piledriver leads equipped with decked landings having guard rails, intermediate rails, and toeboards? Are the fixed leads provided with a fixed ladder or stairs for access to landings and head blocks?	X		
24. Are the piledriver leads equipped with a stop block to prevent the hammer from being raised against the head block?			X
25. Are fixed ladders more than 20 feet in height on piledriver leads provided with a ladder climbing device?			X
26. Are all wire ropes or cables in good operating condition?			X
27. Are drums, sheaves, sheave pins, and pulleys smooth and free of defects?			X
28. Are wire rope sockets, splices, thimbles, and clips adequate and properly applied?			X
29. Are hooks, shackles, rings, eyes, and other fittings in good condition?			X
30. Are running lines of housing equipment exposed to hazardous contact adequately guarded?			X
31. Are fueling cans used with this equipment approved type safety cans?	X		

ITEM	YES (X)	NO (X)	N/A (X)
32. Are adequate Class B or Class C extinguishers installed on off-the-road construction equipment charged, tagged, and ready for use, suitably placed, and distinctly marked, and is accessibility to them unobstructed?	X		
33. Performance Test prior to being placed in operation the following cranes and derricks will be given a performance test to demonstrate the strength, stability, capability, and adequacy of power, brakes, clutches, and controls to safely maneuver the specified percent of the maximum anticipated load at the maximum boom radius to be used in accomplishing the current contract operations. This test will be the basis upon which the equipment is rated for the current contract. Particular attention shall be given that under the circumstances will the maximum anticipated load used for performance test load exceed the manufacturers rating. The contractor will provide the test weights. A. Crawler truck and wheel mounted cranes 125% of the maximum anticipated load. B. Portal, hammerhead, and tower cranes 125% of the maximum anticipated load. C. Pedestal mounted cranes and derricks 125% of the maximum anticipated load. D. Floating cranes 150% of the maximum anticipated load Date:_____ Weight of Performance Test Load: _____ tons Length of Boom: _____ feet Maximum radius at which test performed: _____ feet			X
34. Are adequate guardrails provided around the skips of pavers, concrete mixers, and similar equipment?	X		
35. Are all motor vehicles equipped as follows: A. Directional signal lights both front and rear? B. Two headlights, one on each side, one red tail light, and one red or amber stop light for operation between sunset and sunrise when applicable?	X		
36. Is service or maintenance equipment, which will be parked or moving slower than normal traffic on haul roads and night, equipped with a flashing yellow light mounted to be visible from all directions?	X		
37. Are truck and crawler mounted cranes mounted on barges securely attached to the barge, or are control barriers provided to prevent equipment from running off barge where barge stability is such as to permit limited travel?	X		
38. Are brakes on wheeled equipment in good operating condition?			X
39. Are windshields on equipment provided with windshield wipers in proper operating condition?	X		
40. Is all glass installed in cabs and bodies of vehicles and equipment "safety glass"?	X		
41. Are trucks and similar equipment equipped with speedometers in working condition?			X
42. Are running boards and steps of vehicles provided with non-slip surfaces?	X		

ITEM	YES (X)	NO (X)	N/A (X)
43. Are dump bodies provided with hinged struts or other suitable devices for locking body in raised position?			X
44. Are tailgate dumping devices so arranged that operator will be in the clear while dumping load?			X
45. Is engine equipped with power-operated starting device in operative condition?	X		
46. Is air-pressure gauge in operative condition on equipment with air brake?			X
47. Is oil tank equipped with drain valve in an accessible position?			X
48. Are towing devices structurally adequate and properly mounted?			X
49. If equipment is to operate on airfield landing areas, is it equipped with proper flags of proper size and color?			X
50. Are cables for electrically powered equipment in good condition and are insulated hot sticks available for handling cables?			X
51. Is all self-propelled construction equipment except light service trucks, panels, pickups, station wagons, and crawler-type cranes, power shovels, backhoes, and draglines equipped with a reverse signal alarm which will operate automatically when the vehicle moves in reverse and will give suitable audible sound alarm at certain intervals for the conditions and circumstances under which the equipment is operated?			X
52. Construction equipment equipped with ROPS shall also have installed a safety belt for the operator.	X		
53. Are operators able to read and understand signs, notices, operating instructions, and signal code to be used?			
A. Does operator have any known physical or mental condition which would be detrimental to safe operation of the equipment?			
B. Is his vision and hearing good?	X		
54. Has all broken or cracked glass been replaced?	X		
55. Remarks (Enter action taken):			

PROJECT NAME: SEDA, Ash LandFill

PROJECT NO. 519200

DELIVERY ORDER NO. 01

HEAVY EQUIPMENT
SAFETY INSPECTION CHECKLIST

For Cranes, Shovels, Derricks, Draglines, Cranes equipped with Pile Drivers, Pavers, Scrapers, Graders, Pans, Loaders, Dump Trucks, and similar heavy equipment.

INSTRUCTIONS: To be completed by contractor in accordance with contract equipment (Reference Corps of Engineers Safety and Health Requirements Manual, April 1981, Paragraphs 18.A.01 and 18.C.01).

Contractor: IT CORPORATION		Contract No.:
Type of Equipment: Loader 966	Equipment No.: 0-6	Date of Inspection: 10-22-94
Type of Inspection: ☑ Initial ☐ Annual	☐ Critical Lift or Operation	
Inspected By: (Signature) Frank Moore	Approved By:	

ITEM	YES (X)	NO (X)	N/A (X)
1. Is a notice of minimum required clearance for high-voltage lines posted at operator's position when operations are adjacent to overhead lines?	X		
2. Are belts, gears, shafts, pulleys, sprockets, drums, flywheels, chains, or other reprocating or rotating parts adequately guarded?	X		
3. Are fuel tanks located so that spills or overflows will not come in contact with engine, exhaust, or electrical equipment?	X		
4. Are all hot surfaces exposed to accidental contact suitable guarded or insulated to prevent injury or fire?	X		
5. Are exhausts and discharges so directed as not to endanger workmen or obstruct view of operator?	X		
6. Are platforms, catwalks, steps, handholds, and guardrails provided to ensure safe footing and accessways?	X		
7. Is adequate protection for operator provided against the elements, falling or flying objects, swinging loads, backlash of winch cables, and similar hazards?	X		
8. For those pieces of equipment which require rollover protection (ROP), is there a certificate or permanently affixed information from either the (1) manufacturer of the piece of equipment, (2) the manufacturer of the ROP, or (3) a registered professional engineer attesting to the adequacy of the ROP?	X		
9. If equipment is to be operated on highways, is it equipped with turn signals?	X		
10. Are positive stops or limiting devices provided for equipment operated on rails?			X

ITEM	YES (X)	NO (X)	N/A (X)
11. Is a barricade provided where there is danger to persons from the swing radius of the rotating superstructure of a crane?		X	X
12. Is all heavy duty haulage equipment equipped with an operable emergency braking system which will automatically stop the equipment upon failure in the service brake system?	X		
13. Is a rated load capacity chart determined by performance test, recommended operating speeds, and special hazards posted in the cab of the crane?	X		
14. Do all joints requiring lubrication during operation have such fittings located or guarded in such manner that personnel servicing the equipment are protected from injury?	X		
15. Do all modifications, extensions, replacement parts, and/or repairs to equipment maintain the same factor of safety as the originally manufactured equipment?	X		
16. Does a visual inspection reveal any structural members bent or rusted, or do they otherwise show signs of damage?	X		
17. Are all load drums on load hoisting equipment with dogs, paws, or other positive locking devices?	X		
18. Is there sufficient cable to allow two full wraps of cable on drums at all working positions?			X
19. Is hoist braking equipment capable of stopping, lowering, and holding a load of at least the full test load?			X
20. Are traveling rail mounted gantry cranes (except floor operated type) equipped with a warning device which will sound continuously when crane is traveling?	X		
21. Are all hose connections to pilediver hammers, pile ejectors, and jet pipes equipped with a safety lashing?	X		✓
22. Are the hanging or swinging pilediving leads equipped with a fixed ladder?			X
23. Are fixed pilediver leads equipped with decked landings having guard rails, intermediate rails, and toeboards? Are the fixed leads provided with a fixed ladder or stairs for access to landings and head blocks?			X
24. Are the pilediver leads equipped with a stop block to prevent the hammer from being raised against the head block?			X
25. Are fixed ladders more than 20 feet in height on pilediver leads provided with a ladder climbing device?			X
26. Are all wire ropes or cables in good operating condition?			X
27. Are drums, sheaves, sheave pins, and pulleys smooth and free of defects?	X		
28. Are wire rope sockets, splices, thimbles, and clips adequate and properly applied?	✓		X
29. Are hooks, shackles, rings, eyes, and other fittings in good condition?			X
30. Are running lines of hoisting equipment exposed to hazardous contact adequately guarded?	X		
31. Are fueling cans used with this equipment approved type safety cans?	X		

ITEM	YES (X)	NO (X)	N/A (X)
32. Are adequate Class B or Class C extinguishers installed on off-the-road construction equipment charged, tagged, and ready for use, suitably placed, and distinctly marked, and is accessibility to them unobstructed?	X		
33. Performance Test prior to being placed in operation the following cranes and derricks will be given a performance test to demonstrate the strength, stability, capability, and adequacy of power, brakes, clutches, and controls to safely maneuver the specified percent of the maximum anticipated load at the maximum boom radius to be used in accomplishing the current contract operations. This test will be the basis upon which the equipment is rated for the current contract. Particular attention shall be given that under the circumstances will the maximum anticipated load used for performance test load exceed the manufacturers rating. The contractor will provide the test weights. A. Crawler truck and wheel mounted cranes 125% of the maximum anticipated load. B. Portal, hammerhead, and tower cranes 125% of the maximum anticipated load. C. Pedestal mounted cranes and derricks 125% of the maximum anticipated load. D. Floating cranes 150% of the maximum anticipated load Date:_____ Weight of Performance Test Load: _____ tons Length of Boom: _____ feet Maximum radius at which test performed: _____ feet			X
34. Are adequate guardrails provided around the skips of pavers, concrete mixers, and similar equipment?	X		X
35. Are all motor vehicles equipped as follows: A. Directional signal lights both from and rear? B. Two headlights, one on each side, one red tail light, and one red or amber stop light for operation between sunset and sunrise when applicable?	X		
36. Is service or maintenance equipment, which will be parked or moving slower than normal traffic on haul roads and night, equipped with a flashing yellow light mounted to be visible from all directions?	X		
37. Are truck and crawler mounted cranes mounted on barges securely attached to the barge, or are control barriers provided to prevent equipment from running off barge where barge stability is such as to permit limited travel?			X
38. Are brakes on wheeled equipment in good operating condition?	X		
39. Are windshields on equipment provided with windshield wipers in proper operating condition?	X		
40. Is all glass installed in cabs and bodies of vehicles and equipment "safety glass"?	X		
41. Are trucks and similar equipment equipped with speedometers in working condition?	X		
42. Are running boards and steps of vehicles provided with non-slip surfaces?	X		

ITEM	YES (X)	NO (X)	N/A (X)
43. Are dump bodies provided with hinged struts or other suitable devices for locking body in raised position?			X
44. Are tailgate dumping devices so arranged that operator will be in the clear while dumping load?			X
45. Is engine equipped with power-operated starting device in operative condition?	X		
46. Is air-pressure gauge in operative condition on equipment with air brake?	X		
47. Is air tank equipped with drain valve in an accessible position?	X		X
48. Are towing devices structurally adequate and properly mounted?	X		
49. If equipment is to operate on airfield landing areas, is it equipped with proper flags of proper size and color?	X		X
50. Are cables for electrically powered equipment in good condition and are insulated hot sticks available for handling cables?	X		
51. Is all self-propelled construction equipment except light service trucks, panels, pickups, station wagons, and crawler-type cranes, power shovels, backhoes, and draglines equipped with a reverse signal alarm which will operate automatically when the vehicle moves in reverse and will give suitable audible sound alarm at certain intervals for the conditions and circumstances under which the equipment is operated?	X		
52. Construction equipment equipped with ROPS shall also have installed a safety belt for the operator.	X		
53. Are operators able to read and understand signs, notices, operating instructions, and signal code to be used? A. Does operator have any known physical or mental condition which would be detrimental to safe operation of the equipment? B. Is his vision and hearing good?	X		
54. Has all broken or cracked glass been replaced?			X
55. Remarks (Enter action taken):			

PROJECT NAME: SEDA, Ash Land Fill

PROJECT NO. 519200

DELIVERY ORDER NO. 01

HEAVY EQUIPMENT SAFETY INSPECTION CHECKLIST

For Cranes, Shovels, Derricks, Draglines, Cranes equipped with Pile Drivers, Pavers, Scrapers, Graders, Pans, Loaders, Dump Trucks, and similar heavy equipment.

INSTRUCTIONS: To be completed by contractor in accordance with contract requirement (Reference Corps of Engineers Safety and Health Requirements Manual, April 1981, Paragraphs 18.A.01 and 18.C.01).

Contractor: IT CORPORATION		Contract No.: [illegible]
Type of Equipment: FRONT END LOADER	Equipment No.: L 21-FOC 355	Date of Inspection: 10-20-94
Type of Inspection: ☒ Initial ☐ Annual	☐ Critical Lift or Operation	
Inspected By: (Signature) L.M. Folsom	Approved By: [illegible]	

ITEM	YES (X)	NO (X)	N/A (X)
1. Is a notice of minimum required clearance for high-voltage lines posted at operator's position when operations are adjacent to overhead lines?	X		
2. Are belts, gears, shafts, pulleys, sprockets, drums, flywheels, chains, or other reciprocating or rotating parts adequately guarded?	X		
3. Are fuel tanks located so that spills or overflows will not come in contact with engine, exhaust, or electrical equipment?	X		
4. Are all hot surfaces exposed to accidental contact suitable guarded or insulated to prevent injury or fire?	X		
5. Are exhausts and discharges so directed as not to endanger workmen or obstruct view of operator?	X		
6. Are platforms, catwalks, steps, handholds, and guardrails provided to ensure safe footing and accessways?	X		
7. Is adequate protection for operator provided against the elements, falling or flying objects, swinging loads, backlash of winch cables, and similar hazards?	X		
8. For those pieces of equipment which require rollover protection (ROP), is there a certificate or permanently affixed information from either the (1) manufacturer of the piece of equipment, (2) the manufacturer of the ROP, or (3) a registered professional engineer attesting to the adequacy of the ROP?	X		
9. If equipment is to be operated on highways, is it equipped with turn signals?	X		
10. Are positive stops or limiting devices provided for equipment operated on rails?			X

ITEM	YES (X)	NO (X)	N/A (X)
11. Is a barricade provided where there is danger to persons from the swing radius of the rotating superstructure of a crane?			N/A
12. Is all heavy duty haulage equipment equipped with an operable emergency braking system which will automatically stop the equipment upon failure in the service brake system?	X		
13. Is a rate load capacity chart determined by performance test, recommended operating speeds, and special hazards posted in the cab of the crane?	X		
14. Do all points requiring lubrication during operation have such fittings located or guarded in such manner that personnel servicing the equipment are protected from injury?	X		
15. Do all modifications, extensions, replacement parts, and/or repairs to equipment maintain the same factor of safety as the originally manufactured equipment?	X		
16. Does a visual inspection reveal any structural members bent or rusted, or do they otherwise show signs of damage?	X		
17. Are all load drums on load housing equipment with dogs, paws, or other positive locking devices?	X		
18. Is there sufficient cable to allow two full wraps of cable on drums at all working positions?			X
19. Is hoist braking equipment capable of stopping, lowering, and holding a load of at least the full test load?			X
20. Are traveling rail mounted gantry cranes (except floor operated type) equipped with a warning device which will sound continuously when crane is traveling?	X		
21. Are all hose connections to piledriver hammers, pile ejectors, and jet pipes equipped with a safety lashing?	X		X
22. Are the hanging or swinging piledriving leads equipped with a fixed ladder?			X
23. Are fixed piledriver leads equipped with decked landings having guard rails, intermediate rails, and toeboards? Are the fixed leads provided with a fixed ladder or stairs for access to landings and head blocks?			X
24. Are the piledriver leads equipped with a stop block to prevent the hammer from being raised against the head block?			X
25. Are fixed ladders more than 20 feet in height on piledriver leads provided with a ladder climbing device?			X
26. Are all wire ropes or cables in good operating condition?			X
27. Are drums, sheaves, sheave pins, and pulleys smooth and free of defects?	X		
28. Are wire rope sockets, splices, thimbles, and clips adequate and properly applied?			X
29. Are hooks, shackles, rings, eyes, and other fittings in good condition?			X
30. Are running lines of hoisting equipment exposed to hazardous contact adequately guarded?	X		
31. Are fueling cans used with this equipment approved type safety cans?	X		

ITEM	YES (X)	NO (X)	N/A (X)
32. Are adequate Class B or Class C extinguishers installed on off-the-road construction equipment charged, tagged, and ready for use, suitably placed, and distinctly marked, and is accessibility to them unobstructed?	X		
33. Performance Test prior to being placed in operation the following cranes and derricks will be given a performance test to demonstrate the strength, stability, capability, and adequacy of power, brakes, clutches, and controls to safely maneuver the specified percent of the maximum anticipated load at the maximum boom radius to be used in accomplishing the current contract operations. This test will be the basis upon which the equipment is rated for the current contract. Particular attention shall be given that under the circumstances will the maximum anticipated load used for performance test load exceed the manufacturers rating. The contractor will provide the test weights. A. Crawler truck and wheel mounted cranes 125% of the maximum anticipated load. B. Portal, hammerhead, and tower cranes 125% of the maximum anticipated load. C. Pedestal mounted cranes and derricks 125% of the maximum anticipated load. D. Floating cranes 150% of the maximum anticipated load Date_____ Weight of Performance Test Load: _____ tons Length of Boom: _____ feet Maximum radius at which test performed: _____ feet			X
34. Are adequate guardrails provided around the sides of pavers, concrete mixers, and similar equipment?	X		
35. Are all motor vehicles equipped as follows: A. Directional signal lights both front and rear? B. Two headlights, one on each side, one red tail light, and one red or amber stop light for operation between sunset and sunrise when applicable?	X		
36. Is service or maintenance equipment, which will be parked or moving slower than normal traffic on haul roads and night, equipped with a flashing yellow light mounted to be visible from all directions?	X		
37. Are truck and crawler mounted cranes mounted on barges securely attached to the barge, or are control barriers provided to prevent equipment from running off barge where barge stability is such as to permit limited travel?			X
38. Are brakes on wheeled equipment in good operating condition?	X		
39. Are windshields on equipment provided with windshield wipers in proper operating condition?	X		
40. Is all glass installed in cabs and bodies of vehicles and equipment "safety glass"?	X		
41. Are trucks and similar equipment equipped with speedometers in working condition?	X		
42. Are running boards and steps of vehicles provided with non-slip surfaces?	X		

ITEM	YES (X)	NO (X)	N/A (X)
43. Are dump bodies provided with hinged struts or other suitable devices for locking body in raised position?			X
44. Are tailgate dumping devices so arranged that operator will be in the clear while dumping load?			X
45. Is engine equipped with power-operated starting device in operative condition?	X		
46. Is air-pressure gauge in operative condition on equipment with air brake?	X		
47. Is air tank equipped with drain valve in an accessible position?			X
48. Are towing devices structurally adequate and properly mounted?	X		
49. If equipment is to operate on airfield landing areas, is it equipped with proper flags of proper size and color?			X
50. Are cables for electrically powered equipment in good condition and are insulated hot sticks available for handling cables?	X		
51. Is all self-propelled construction equipment except light service trucks, panels, pickups, station wagons, and crawler-type cranes, power shovels, backhoes, and draglines equipped with a reverse signal alarm which will operate automatically when the vehicle moves in reverse and will give suitable audible sound alarm at certain intervals for the conditions and circumstances under which the equipment is operated?	X		
52. Construction equipment equipped with ROPS shall also have installed a safety belt for the operator.	X		
53. Are operators able to read and understand signs, notices, operating instructions, and signal code to be used? A. Does operator have any known physical or mental condition which would be detrimental to safe operation of the equipment? B. Is his vision and hearing good?	X		
54. Has all broken or cracked glass been replaced?			X
55. Remarks (Enter action taken):			

SUBCONTRACTOR CERTIFICATION

I, [illegible] as an agent of [illegible], do hereby certify that the following employees comply with the medical and training provisions of 29 CFR 1926.65. Individual copies of certification of successful completion of the required training and medical examination are attached for each employee.

Signature: [illegible] Date [illegible]

Subcontractor Employee Name	Medical Clearance Expiration Date	24-Hr or 40-Hr OSHA Training	Refresher Training Expiration Date
[illegible] Gibson	3-30-95	40 hr [illegible] Supervisor [illegible]	[illegible]
Jonnathan Smith	5-22-95	40 hr [illegible]	[illegible]
Frank Jackson	7-30-95	40 hr [illegible]	[illegible]
Ernest N. Cocyin	4-14-95	40 hr [illegible]	[illegible]
Robert [illegible]	10-8-95	40 hr [illegible]	[illegible]
Tim Cook	3-16-95	40 hr [illegible]	[illegible]
Joseph Rizzuto	10-8-95	40 hr 9-16-94	N/A
Gary Greenwalt	5-5-95	40 hr. 12-15-94 Sup. 12-19-94	[illegible]
Pete Crutchfield	11-9-94	40 hr 10-24-93	
Mike Dunbar	4-30-95	40 hr 3-1-94	N/A

IT CORPORATION

PROJECT

EQUIPMENT INSPECTION LOG

Equipment Type: [illegible]

Equipment Supplier: [illegible]

I.D. #: [illegible]

Date: 10-5-94

BRAKES	✓	COOLING WATER	✓
AIR SYSTEM	✓	OPERATING CONTROLS	✓
TIRES/TRACKS	✓	LIGHTS/REFLECTORS	✓
HORN	✓	WINDSHIELD WIPERS	N/A
SAFETY DEVICES	✓	FIRE EXTINGUISHER	NO
GLASS	N/A	BACKUP ALARM	✓
MIRRORS	✓	ENGINE OIL	Add/Check
DEFROSTER	N/A	EXHAUST SYSTEM	✓
STEERING SYSTEM	✓	FLUID LEVELS	✓
WIRE ROPE	N/A	MAINTAINENCE MANUALS	✓
APPEARANCE	✓	OPERATING MANUALS	✓
ELECTRICAL SYSTEM	✓	LOAD CHARTS	✓
INSPECTOR:	[illegible]	DATE:	10-5-94
APPROVED: (HEALTH &SAFETY)		DATE:	
PHOTOGRAPHS TAKEN			

IT CORPORATION

PROJECT

EQUIPMENT INSPECTION LOG

Equipment Type: IT 28F PAYLOADER CAT

Equipment Supplier: SYRACUSE SERVICE SUPPLY

I.D. #: X3C200713

Date: 10-5-94

BRAKES	✓	COOLING WATER	✓
AIR SYSTEM	✓	OPERATING CONTROLS	✓
TIRES/TRACKS	✓	LIGHTS/REFLECTORS	✓
HORN	✓	WINDSHIELD WIPERS	✓
SAFETY DEVICES	✓	FIRE EXTINGUISHER	✓
GLASS	✓	BACKUP ALARM	✓
MIRRORS	✓	ENGINE OIL OK	Add/Check NONE ✓
DEFROSTER	✓	EXHAUST SYSTEM	✓
STEERING SYSTEM	✓	FLUID LEVELS	✓
WIRE ROPE	NA	MAINTAINENCE MANUALS	✓
APPEARANCE	GOOD	OPERATING MANUALS	✓
ELECTRICAL SYSTEM	✓	LOAD CHARTS	NA
INSPECTOR:	Floyd Moore	DATE:	10-5-94
APPROVED: (HEALTH &SAFETY)		DATE:	
PHOTOGRAPHS TAKEN			

IT CORPORATION

PROJECT

EQUIPMENT INSPECTION LOG

Equipment Type: D 3E [illegible]

Equipment Supplier: Superior [illegible]

I.D. #: [illegible]

Date: 10-6-94

[illegible]

BRAKES	✓	COOLING WATER	✓
AIR SYSTEM	✓	OPERATING CONTROLS	✓
TIRES/TRACKS	✓	LIGHTS/REFLECTORS	✓
HORN	✓	WINDSHIELD WIPERS	N/A
SAFETY DEVICES	✓	FIRE EXTINGUISHER	N/A
GLASS	N/A	BACKUP ALARM	✓
MIRRORS	✓	ENGINE OIL	Add/Check
DEFROSTER	N/A	EXHAUST SYSTEM	✓
STEERING SYSTEM	✓	FLUID LEVELS	✓
WIRE ROPE	N/A	MAINTAINENCE MANUALS	✓
APPEARANCE	✓	OPERATING MANUALS	✓
ELECTRICAL SYSTEM	✓	LOAD CHARTS	✓
INSPECTOR:	[illegible]	DATE:	10-6-94
APPROVED: (HEALTH &SAFETY)		DATE:	
PHOTOGRAPHS TAKEN			

IT CORPORATION

PROJECT

EQUIPMENT INSPECTION LOG

Equipment Type: IT 28 F PAYLOADER CAT

Equipment Supplier: SYRACUSE SERVICE SUPPLY

I.D. #: X3 CR00713

Date: 10-6-94

BRAKES	✓	COOLING WATER	✓
AIR SYSTEM	✓	OPERATING CONTROLS	✓
TIRES/TRACKS	✓	LIGHTS/REFLECTORS	✓
HORN	✓	WINDSHIELD WIPERS	✓
SAFETY DEVICES	✓	FIRE EXTINGUISHER	✓
GLASS	✓	BACKUP ALARM	
MIRRORS	✓	ENGINE OIL Add/Check	✓
DEFROSTER	✓	EXHAUST SYSTEM	✓
STEERING SYSTEM	✓	FLUID LEVELS	✓
WIRE ROPE	NA	MAINTAINENCE MANUALS	✓
APPEARANCE	GOOD	OPERATING MANUALS	✓
ELECTRICAL SYSTEM	✓	LOAD CHARTS	NA
INSPECTOR:	Frank Moore	DATE:	10-6-94
APPROVED: (HEALTH &SAFETY)		DATE:	
PHOTOGRAPHS TAKEN			

IT CORPORATION

PROJECT

EQUIPMENT INSPECTION LOG

Equipment Type: IT 29F Loader

Equipment Supplier: Syracuse Supply

I.D. #: X3LR00713

Date: 10-7-94

BRAKES	✓	COOLING WATER	✓
AIR SYSTEM	✓	OPERATING CONTROLS	✓
TIRES/TRACKS	✓	LIGHTS/REFLECTORS	✓
HORN	✓	WINDSHIELD WIPERS	✓
SAFETY DEVICES	✓	FIRE EXTINGUISHER	✓
GLASS	✓	BACKUP ALARM	✓
MIRRORS	✓	ENGINE OIL	Add/Check
DEFROSTER	✓	EXHAUST SYSTEM	✓
STEERING SYSTEM	✓	FLUID LEVELS	✓
WIRE ROPE	NA	MAINTAINENCE MANUALS	✓
APPEARANCE	✓	OPERATING MANUALS	✓
ELECTRICAL SYSTEM	✓	LOAD CHARTS	✓
INSPECTOR:	Eddie [illegible]	DATE:	10-7-94
APPROVED: (HEALTH &SAFETY)		DATE:	
PHOTOGRAPHS TAKEN			

IT CORPORATION

PROJECT

EQUIPMENT INSPECTION LOG

Equipment Type: D3C Dozer

Equipment Supplier: Syecruse Supply

I.D. #: X65L00291

Date: 10-7-94

BRAKES	✓ ok	COOLING WATER	ok
AIR SYSTEM	✓ ok	OPERATING CONTROLS	ok
TIRES/TRACKS	✓ ok	LIGHTS/REFLECTORS	ok
HORN	ok	WINDSHIELD WIPERS	NA
SAFETY DEVICES	ok	FIRE EXTINGUISHER	ok
GLASS	NA	BACKUP ALARM	ok
MIRRORS	~~NA~~ ok	ENGINE OIL	Add/Check
DEFROSTER	NA	EXHAUST SYSTEM	ok
STEERING SYSTEM	ok	FLUID LEVELS	ok
WIRE ROPE	NA	MAINTAINENCE MANUALS	ok
APPEARANCE	ok	OPERATING MANUALS	ok
ELECTRICAL SYSTEM	ok	LOAD CHARTS	ok
INSPECTOR:	[illegible]	DATE:	
APPROVED: (HEALTH &SAFETY)	Eddie [illegible]	DATE:	10-7-94
PHOTOGRAPHS TAKEN			

IT CORPORATION

PROJECT

EQUIPMENT INSPECTION LOG

Equipment Type: IT 28F Loader

Equipment Supplier: Syracuse Supply

I.D. #: X3CR 00713

Date: 10-8-94

BRAKES	✓	COOLING WATER	✓
AIR SYSTEM	✓	OPERATING CONTROLS	✓
TIRES/TRACKS	✓	LIGHTS/REFLECTORS	✓
HORN	✓	WINDSHIELD WIPERS	✓
SAFETY DEVICES	✓	FIRE EXTINGUISHER	✓
GLASS	✓	BACKUP ALARM	✓
MIRRORS	✓	ENGINE OIL	Add/Check
DEFROSTER	✓	EXHAUST SYSTEM	✓
STEERING SYSTEM	✓	FLUID LEVELS	✓
WIRE ROPE	✓	MAINTAINENCE MANUALS	✓
APPEARANCE	✓	OPERATING MANUALS	✓
ELECTRICAL SYSTEM	✓	LOAD CHARTS	
INSPECTOR: Ed [illegible]		DATE: 10-8-94	
APPROVED: (HEALTH &SAFETY)		DATE:	
PHOTOGRAPHS TAKEN			

IT CORPORATION

PROJECT

EQUIPMENT INSPECTION LOG

Equipment Type: DC 3 Dozer

Equipment Supplier: Syracuse Supply

I.D. #: X6SL00291

Date: 10-8-94

BRAKES	✓	COOLING WATER	✓
AIR SYSTEM	✓	OPERATING CONTROLS	✓
TIRES/TRACKS	✓	LIGHTS/REFLECTORS	✓
HORN	✓	WINDSHIELD WIPERS	NA
SAFETY DEVICES	✓	FIRE EXTINGUISHER	✓
GLASS	✓	BACKUP ALARM	✓
MIRRORS	✓	ENGINE OIL	Add/Check
DEFROSTER	NA	EXHAUST SYSTEM	✓
STEERING SYSTEM	✓	FLUID LEVELS	✓
WIRE ROPE	NA	MAINTAINENCE MANUALS	✓
APPEARANCE	✓	OPERATING MANUALS	✓
ELECTRICAL SYSTEM	✓	LOAD CHARTS	✓
INSPECTOR:	[illegible]	DATE:	10-8-94
APPROVED: (HEALTH &SAFETY)		DATE:	
PHOTOGRAPHS TAKEN			

IT CORPORATION

PROJECT

EQUIPMENT INSPECTION LOG

Equipment Type: IT 28F

Equipment Supplier: Syracuse Supply

I.D. #: X3CR00713

Date: 10-10-94

BRAKES	✓	COOLING WATER	✓
AIR SYSTEM	✓	OPERATING CONTROLS	✓
TIRES/TRACKS	✓	LIGHTS/REFLECTORS	✓
HORN	✓	WINDSHIELD WIPERS	✓
SAFETY DEVICES	✓	FIRE EXTINGUISHER	✓
GLASS	✓	BACKUP ALARM	✓
MIRRORS	✓	ENGINE OIL	✓ Add/Check
DEFROSTER	✓	EXHAUST SYSTEM	✓
STEERING SYSTEM	✓	FLUID LEVELS	✓
WIRE ROPE	NA	MAINTAINENCE MANUALS	✓
APPEARANCE	✓	OPERATING MANUALS	✓
ELECTRICAL SYSTEM	✓	LOAD CHARTS	✓
INSPECTOR:	Eddie Fleming	DATE:	10-10-94
APPROVED: (HEALTH & SAFETY)		DATE:	
PHOTOGRAPHS TAKEN			

IT CORPORATION

PROJECT

EQUIPMENT INSPECTION LOG

Equipment Type: D3C Dozer

Equipment Supplier: Syracuse Supply

I.D. #: X65L00291

Date: 10-10-94

BRAKES	✓	COOLING WATER	✓
AIR SYSTEM	✓	OPERATING CONTROLS	✓
TIRES/TRACKS	✓	LIGHTS/REFLECTORS	✓
HORN	✓	WINDSHIELD WIPERS	NA
SAFETY DEVICES	✓	FIRE EXTINGUISHER	✓
GLASS	NA	BACKUP ALARM	✓
MIRRORS	✓	ENGINE OIL	Add/Check
DEFROSTER	NA	EXHAUST SYSTEM	✓
STEERING SYSTEM	✓	FLUID LEVELS	✓
WIRE ROPE	NA	MAINTAINENCE MANUALS	✓
APPEARANCE	✓	OPERATING MANUALS	✓
ELECTRICAL SYSTEM	✓	LOAD CHARTS	✓
INSPECTOR:	Ed Ir	DATE:	10-10-94
APPROVED: (HEALTH &SAFETY)		DATE:	
PHOTOGRAPHS TAKEN			

IT CORPORATION

PROJECT

EQUIPMENT INSPECTION LOG

Equipment Type: IT 28F

Equipment Supplier: Syracuse Supply

I.D. #: X3LRDC713

Date: 10-11-94

BRAKES	✓	COOLING WATER	✓
AIR SYSTEM	✓	OPERATING CONTROLS	✓
TIRES/TRACKS	✓	LIGHTS/REFLECTORS	✓
HORN	✓	WINDSHIELD WIPERS	✓
SAFETY DEVICES	✓	FIRE EXTINGUISHER	✓
GLASS	✓	BACKUP ALARM	✓
MIRRORS	✓	ENGINE OIL	✓ Add/Check
DEFROSTER	✓	EXHAUST SYSTEM	✓
STEERING SYSTEM	✓	FLUID LEVELS	✓
WIRE ROPE	NA	MAINTAINENCE MANUALS	✓
APPEARANCE	✓	OPERATING MANUALS	✓
ELECTRICAL SYSTEM	✓	LOAD CHARTS	✓
INSPECTOR:	[illegible]	DATE:	10-11-94
APPROVED: (HEALTH &SAFETY)		DATE:	
PHOTOGRAPHS TAKEN			

SAFETY INSPECTION CHECK LIST FOR CONSTRUCTION EQUIPMENT	Date of Inspection 10/10/94
Contractor or Unit FER TECH	Contract Number - Job Description 519200
Type of Equipment & Boom Length	Make, Model No., Identification
Inspected by (Signature) Guy McEly	Approved by (Signature)

CRANES AND DERRICKS NOTE: Corps of Engineers General Requirements (EM 385-1-1) references are shown in parentheses.	Yes	No	Not Appl.
1. Is a list of the required clearance from overhead power lines posted? If necessary to work near power lines, boom shall have insulating cage guard and load line shall have insulating link. (15.E.08)		X	
2. Are load rating plates posted in view of the operator? (18.C.02)		X	
3. Is a list of standard hand signals posted in cab? (18.C.10)		X	
4. Are shock absorbing boom stops installed on machine? (18.C.19)			X
5. Do stops control vertical motion of boom with gradually increasing resistance from 83° or less (without impact) and limiting vertical rise to 88° above horizontal? (18.C.19)			X
6. Does the boom angle, levelness, and other indicators operate accurately? (18.D.03, 18.C.13, 18.D.04)	X		X
7. Does the unit have a suitable fire extinguisher?	X		
8. Are moving parts, gears, drums, shafts, belts adequately screened or guarded? (18.B.03)	X		
9. Is there adequate protection from hot pipes, etc? (18.B.04)	X		
10. Are steps, ladders, guard rails provided for safe footing and access? (22.A.04, 22.A.07, 22.A.18, 18.B.09)	X		
11. Can lubrication and greasing be done safely? (18.A.18)	X		
12. Is the cab equipped with unbroken safety glass? (18.C.15)		X	
13. Is the fuel tank located so that overflow and spills will not run into cab or come in contact with exhaust? (18.B.05)			
14. Is the unit shut down for fueling, servicing, etc? (18.A.25)			
15. Are slings, fastenings, fittings inspected daily by a qualified person? Is wire rope inspected by a competent person frequently?			
16. When wedge socket type fasteners are used, has the dead end been made secure against loosening? (17.C.11)			
17. Have the air tanks been tested and certified? (21.A.20)			
18. Are test and inspection records kept available as a part of the official project file? (18.A.01)			
19. Is there evidence of deformed, cracked, or corroded members in the crane structure or boom?			
20. Do the drums have proper pawls or positive locking devices? (18.C.05)			
21. Is there sufficient cable available so as to allow two full wraps on the drum at all working positions? (18.C.07)			
22. Are daily inspections being made of all control mechanisms to assure that there is no maladjustment interfering with proper operation?			
23. Are inspections being made, at least monthly, of control mechanisms for excessive wear of components, and contamination by lubricants, or other foreign matter?			
24. Are frequent (daily to monthly) inspections being made of all safety devices?			
25. Are daily inspections for deterioration, or leakage in air or hydraulic systems being made?			
26. Are crane hook inspections being made frequently (daily to monthly) to assure that there are no cracks or that the normal hook throat opening has not increased more than 15%?			
27. Is there evidence of loose bolts or rivets?			
28. Is there evidence of cracked or worn sheaves or drums? (17.C.08)			
29. Are parts such as pins, bearings, shafts, gears, rollers, and locking devices worn, cracked, or distorted?			

CRANE SENT OFF-SITE

IT CORPORATION

PROJECT

EQUIPMENT INSPECTION LOG

Equipment Type: 23C Dozer

Equipment Supplier: Syracuse Supply

I.D. #: X65-00791

Date: 10-10-94

BRAKES	✓	COOLING WATER	✓
AIR SYSTEM	✓	OPERATING CONTROLS	✓
TIRES/TRACKS	✓	LIGHTS/REFLECTORS	✓
HORN	✓	WINDSHIELD WIPERS	NA
SAFETY DEVICES	✓	FIRE EXTINGUISHER	✓
GLASS	NA	BACKUP ALARM	✓
MIRRORS	✓	ENGINE OIL	Add/Check
DEFROSTER	NA	EXHAUST SYSTEM	✓
STEERING SYSTEM	✓	FLUID LEVELS	✓
WIRE ROPE	NA	MAINTAINENCE MANUALS	✓
APPEARANCE	✓	OPERATING MANUALS	✓
ELECTRICAL SYSTEM	✓	LOAD CHARTS	✓
INSPECTOR:	[illegible]	DATE:	10-11-94
APPROVED: (HEALTH &SAFETY)		DATE:	
PHOTOGRAPHS TAKEN			

SAFETY INSPECTION CHECK LIST FOR CONSTRUCTION EQUIPMENT	Date of Inspection 10/11/94
Contractor or Unit FER TECH	Contract Number - Job Description ~~[illegible]~~ 519200
Type of Equipment & Boom Length GROVE 125C1 AT 70CB 5X8	Make, Model No., Identification
Inspected by (Signature) GREG MCELRCY	Approved by (Signature) Greg McEl[illegible]

CRANES AND DERRICKS NOTE: Corps of Engineers General Requirements (EM 385-1-1) references are shown in parentheses.	Yes	No	Not Appl.
1. Is a list of the required clearance from overhead power lines posted? If necessary to work near power lines, boom shall have insulating cage guard and load line shall have insulating link. (15.E.08)	X		
2. Are load rating plates posted in view of the operator? (18.C.02)	X		
3. Is a list of standard hand signals posted in cab? (18.C.10)	X		
4. Are shock absorbing boom stops installed on machine? (18.C.19)	X		
5. Do stops control vertical motion of boom with gradually increasing resistance from 83° or less (without impact) and limiting vertical rise to 88° above horizontal? (18.C.19)	X		
6. Does the boom angle, levelness, and other indicators operate accurately? (18.D.03, 18.C.13, 18.D.04)	X		
7. Does the unit have a suitable fire extinguisher?	X		
8. Are moving parts, gears, drums, shafts, belts adequately screened or guarded? (18.B.03)	X		
9. Is there adequate protection from hot pipes, etc? (18.B.04)	X		
10. Are steps, ladders, guard rails provided for safe footing and access? (22.A.04, 22.A.07, 22.A.18, 18.B.09)	X		
11. Can lubrication and greasing be done safely? (18.A.18)	X		
12. Is the cab equipped with unbroken safety glass? (18.C.15)	X		
13. Is the fuel tank located so that overflow and spills will not run into cab or come in contact with exhaust? (18.B.05)	X		
14. Is the unit shut down for fueling, servicing, etc? (18.A.25)			X
15. Are slings, fastenings, fittings inspected daily by a qualified person? Is wire rope inspected by a competent person frequently?	X		
16. When wedge socket type fasteners are used, has the dead end been made secure against loosening? (17.C.11)	—	—	—
17. Have the air tanks been tested and certified? (21.A.20)			X
18. Are test and inspection records kept available as a part of the official project file? (18.A.01)	X		
19. Is there evidence of deformed, cracked, or corroded members in the crane structure or boom?	X		
20. Do the drums have proper pawls or positive locking devices? (18.C.05)	X		
21. Is there sufficient cable available so as to allow two full wraps on the drum at all working positions? (18.C.07)	X		
22. Are daily inspections being made of all control mechanisms to assure that there is no maladjustment interfering with proper operation?	X		
23. Are inspections being made, at least monthly, of control mechanisms for excessive wear of components, and contamination by lubricants, or other foreign matter?	X		
24. Are frequent (daily to monthly) inspections being made of all safety devices?	X		
25. Are daily inspections for deterioration, or leakage in air or hydraulic systems being made?	X		
26. Are crane hook inspections being made frequently (daily to monthly) to assure that there are no cracks or that the normal hook throat opening has not increased more than 15%?	X		
27. Is there evidence of loose bolts or rivets?	X		
28. Is there evidence of cracked or worn sheaves or drums? (17.C.08)	X		
29. Are parts such as pins, bearings, shafts, gears, rollers, and locking devices worn, cracked, or distorted?	X		

MUST BE CARRIED WHEN OPERATING CRANE

CERTIFICATE NUMBER 94 - 0345	
EXPIRES 05 / 31 / 97	
SOCIAL SECURITY NUMBER 093-34-1625	
EYES BRO	HAIR BRO
WEIGHT 235 lbs.	HEIGHT 6 ft. 00in.

ADDRESS CORRESPONDENCE TO:
(include certificate number)
NYS Department of Labor
DOSH - License and Certificate Unit
One Main Street, Brooklyn, NY 11201

054550A

STATE OF NEW YORK
DEPARTMENT OF LABOR
DIVISION OF SAFETY AND HEALTH

CERTIFICATE OF COMPETENCE
FOR CRANE OPERATOR

GARY W POLMANTEER
P.O. BOX 84
6[illegible] BURTON RD.
M[illegible]HIS, NY 13112

MARIA L. COLAVITO, Director - For the Commissioner of Labor
DOSH-161

IT CORPORATION

PROJECT

EQUIPMENT INSPECTION LOG

Equipment Type: IT 28F

Equipment Supplier: Syracuse Supply

I.D. #: X3LR00713

Date: 10-12-94

BRAKES	✓	COOLING WATER	✓
AIR SYSTEM	✓	OPERATING CONTROLS	✓
TIRES/TRACKS	✓	LIGHTS/REFLECTORS	✓
HORN	✓	WINDSHIELD WIPERS	✓
SAFETY DEVICES	✓	FIRE EXTINGUISHER	✓
GLASS	✓	BACKUP ALARM	✓
MIRRORS	✓	ENGINE OIL	Add/Check
DEFROSTER	✓	EXHAUST SYSTEM	✓
STEERING SYSTEM	✓	FLUID LEVELS	✓
WIRE ROPE	NA	MAINTAINENCE MANUALS	✓
APPEARANCE	✓	OPERATING MANUALS	✓
ELECTRICAL SYSTEM	✓	LOAD CHARTS	✓
INSPECTOR:	[illegible]	DATE:	10-12-94
APPROVED: (HEALTH &SAFETY)		DATE:	
PHOTOGRAPHS TAKEN			

IT CORPORATION

PROJECT

EQUIPMENT INSPECTION LOG

Equipment Type: D3C DOZER

Equipment Supplier: Syracuse Supply

I.D. #: X6SL00291

Date: 10-12-94

BRAKES	✓	COOLING WATER	✓
AIR SYSTEM	✓	OPERATING CONTROLS	✓
TIRES/TRACKS	✓	LIGHTS/REFLECTORS	✓
HORN	✓	WINDSHIELD WIPERS	NA
SAFETY DEVICES	✓	FIRE EXTINGUISHER	✓
GLASS	NA	BACKUP ALARM	✓
MIRRORS	✓	ENGINE OIL	Add/Check
DEFROSTER	NA	EXHAUST SYSTEM	✓
STEERING SYSTEM	✓	FLUID LEVELS	✓
WIRE ROPE	NA	MAINTAINENCE MANUALS	✓
APPEARANCE	✓	OPERATING MANUALS	✓
ELECTRICAL SYSTEM	✓	LOAD CHARTS	✓
INSPECTOR:	Ed R	DATE:	10-12-94
APPROVED: (HEALTH &SAFETY)		DATE:	
PHOTOGRAPHS TAKEN			

CONTRACT	UNIT #	IT EQUIPMENT INSPECTION	DATE
EQUIPMENT		(Initial & Final)	INSP. BY
OTHER		☐ Initial ☐ Final	APPROVED

Item No.	Lower Unit	(✓)	Item No.	Lower Unit (Continued)	(✓)	Item No.	Upper Unit (Continued)	(✓)
1	General Appearance		37	O'Rigger Pads		72	Oil Level	
2	Mileage		38	Clutch, Trans., Rear		73	Water Level	
3	Engine Hrs.		39	Tires		74	Battery Cond.	
4	Oil Pressure		40	Drive Sprockets		75	Battery Level	
5	Water Temp.		41	Track Rollers		76	Battery Cables	
6	Amp. Meter		42	Tracks		77	Starting Ability	
7	Fuel Level		43	Manuals		78	Air System	
8	Air Pressure		44	Fire Extinguisher		79	Clutches	
9	Lo Air Warning		45	Electrical System		80	Linings	
10	Brakes		46	Exhaust System		81	House rollers	
11	Parking Brake		47	Steering		82	Lubrication Cond.	
12	Throttle		48	Cab Heater or Air Cond.		83	Manuals	
13	Back Up Alarm		49	Lift & Tilt Mech.		84	Electrical System	
14	Horn			**Upper Unit**		85	Exhaust System	
15	Wiper		50	General Appearance		86	Guards	
16	Mirrors		51	Engine Hours		87	Cab Heater or Air Cond.	
17	Stop Lights		52	Inst. Panel Appearance			**Boom**	
18	Clearance Lights		53	Oil Pressure		88	Hyd. System	
19	Headlights		54	Water Temperature		89	Boom Sections	
20	Turn Signals		55	Fuel Level		90	Wear Pads	
21	4-Way Flashers		56	Air Pressure		91	Main Cords	
22	General Engine Cond.		57	Lo Air Warning		92	Lattice	
23	Oil Level		58	Parking Brake		93	Pin Holes	
24	Water Level		59	Horn		94	Pins	
25	Transmission Level		60	Wipers		95	Cotter Pins	
26	Power Steering Level		61	Lights		96	Shackles & Sockets	
27	Battery Condition		62	Load Indicator		97	Sheaves (All)	
28	Battery Level		63	Capacity Chart		98	Load Hook Block	
29	Battery Cables		64	Throttles (Hand & Foot)		99	Overhaul Ball	
30	Fan Belts		65	House Lock		100	Boom Cable	
31	Lubrication Cond.		66	Main Hoist Mech.		101	Pendent Cables	
32	Starting Ability		67	Aux. Hoist Mech.		102	Main Load Cable	
33	Air System		68	Swing Mech.		103	Aux. Load Cable	
34	Hyd. System		69	Boom Mech.		104	Boom Angle Indicator	
35	O'Rigger Boxes		70	Travel Mech.		105	Jib	
36	O'Rigger Beams		71	Boom Dog		106	Bucket	

NOTE: Use reverse side for comments.
Enter by Item No.,

Are rated load capacities, recommended operating speeds, special hazard warnings or instructions, hand signals posted and visible to the operator?
☐ Yes ☐ No

CONTRACT	UNIT #	IT EQUIPMENT INSPECTION	DATE 10/12/94
EQUIPMENT 1 + 5 C Crawler		(Initial & Final)	INSP. BY
OTHER		☐ Initial ☐ Final	APPROVED

Item No.	Lower Unit	(✓)	Item No.	Lower Unit (Continued)	(✓)	Item No.	Upper Unit (Continued)	(✓)
1	General Appearance	✓	37	O'Rigger Pads	N/A	72	Oil Level	
2	Mileage		38	Clutch. Trans., Rear		73	Water Level	
3	Engine Hrs.	209	39	Tires	✓	74	Battery Cond.	
4	Oil Pressure	✓	40	Drive Sprockets	N/A	75	Battery Level	
5	Water Temp.	✓	41	Track Rollers	N/A	76	Battery Cables	
6	Amp. Meter	✓	42	Tracks	N/A	77	Starting Ability	
7	Fuel Level	✓	43	Manuals	✓	78	Air System	
8	Air Pressure	✓	44	Fire Extinguisher	✓	79	Clutches	
9	Lo Air Warning		45	Electrical System	✓	80	Linings	
10	Brakes	✓	46	Exhaust System	✓	81	House rollers	
11	Parking Brake	✓	47	Steering	✓	82	Lubrication Cond.	
12	Throttle	✓	48	Cab Heater or Air Cond.	✓	83	Manuals	
13	Back Up Alarm	✓	49	Lift & Tilt Mech.	✓	84	Electrical System	
14	Horn	✓		**Upper Unit**		85	Exhaust System	
15	Wiper	✓	50	General Appearance		86	Guards	
16	Mirrors	✓	51	Engine Hours		87	Cab Heater or Air Cond.	
17	Stop Lights	✓	52	Inst. Panel Appearance			**Boom**	
18	Clearance Lights	✓	53	Oil Pressure		88	Hyd. System	
19	Headlights	✓	54	Water Temperature		89	Boom Sections	
20	Turn Signals	✓	55	Fuel Level		90	Wear Pads	
21	4-Way Flashers	✓	56	Air Pressure		91	Main Cords	
22	General Engine Cond.	✓	57	Lo Air Warning		92	Lattice	
23	Oil Level	✓	58	Parking Brake		93	Pin Holes	
24	Water Level -35°F	✓	59	Horn		94	Pins	
25	Transmission Level	✓	60	Wipers		95	Cotter Pins	
26	Power Steering Level	✓	61	Lights		96	Shackles & Sockets	
27	Battery Condition	✓	62	Load Indicator		97	Sheaves (All)	
28	Battery Level	✓	63	Capacity Chart		98	Load Hook Block	
29	Battery Cables	✓	64	Throttles (Hand & Foot)		99	Overhaul Ball	
30	Fan Belts	✓	65	House Lock		100	Boom Cable	
31	Lubrication Cond.	✓	66	Main Hoist Mech.		101	Pendent Cables	
32	Starting Ability	✓	67	Aux. Hoist Mech.		102	Main Load Cable	
33	Air System	✓	68	Swing Mech.		103	Aux. Load Cable	
34	Hyd. System	✓	69	Boom Mech.		104	Boom Angle Indicator	
35	O'Rigger Boxes	N/A	70	Travel Mech.		105	Jib	
36	O'Rigger Beams	N/A	71	Boom Dog		106	Bucket	

NOTE: Use reverse side for comments. Enter by Item No.

Are rated load capacities, recommended operating speeds, special hazard warnings or instructions, hand signals posted and visible to the operator?
☐ Yes ☐ No

IT CORPORATION

PROJECT

EQUIPMENT INSPECTION LOG

Equipment Type: IT [illegible]

Equipment Supplier: [illegible]

I.D. #: [illegible]

Date: [illegible] 15-94

BRAKES	✓	COOLING WATER	✓
AIR SYSTEM	✓	OPERATING CONTROLS	✓
TIRES/TRACKS	✓	LIGHTS/REFLECTORS	✓
HORN	✓	WINDSHIELD WIPERS	✓
SAFETY DEVICES	✓	FIRE EXTINGUISHER	NONE
GLASS	✓	BACKUP ALARM	✓
MIRRORS	✓	ENGINE OIL	Add/Check
DEFROSTER	✓	EXHAUST SYSTEM	✓
STEERING SYSTEM	✓	FLUID LEVELS	✓
WIRE ROPE	✓	MAINTAINENCE MANUALS	✓
APPEARANCE	✓	OPERATING MANUALS	✓
ELECTRICAL SYSTEM	✓	LOAD CHARTS	✓
INSPECTOR: [illegible]		DATE: [illegible]	
APPROVED: [signature] (HEALTH & SAFETY)		DATE: 13 OCT 94	
PHOTOGRAPHS TAKEN			

IT CORPORATION

PROJECT

EQUIPMENT INSPECTION LOG

Equipment Type: [illegible]

Equipment Supplier: [illegible]

I.D. #: [illegible]

Date: [illegible]

BRAKES	✓	COOLING WATER	✓
AIR SYSTEM	✓	OPERATING CONTROLS	✓
TIRES/TRACKS	✓	LIGHTS/REFLECTORS	✓
HORN	✓	WINDSHIELD WIPERS	N/A
SAFETY DEVICES	✓	FIRE EXTINGUISHER	✓
GLASS	✓	BACKUP ALARM	✓
MIRRORS	✓	ENGINE OIL	Add/Check
DEFROSTER		EXHAUST SYSTEM	✓
STEERING SYSTEM	✓	FLUID LEVELS	
WIRE ROPE		MAINTAINENCE MANUALS	✓
APPEARANCE	✓	OPERATING MANUALS	
ELECTRICAL SYSTEM	✓	LOAD CHARTS	
INSPECTOR: [illegible]		DATE: [illegible]	
APPROVED: [signature] (HEALTH &SAFETY)		DATE: 13OCT94	
PHOTOGRAPHS TAKEN			

IT CORPORATION

PROJECT

EQUIPMENT INSPECTION LOG

Equipment Type: [illegible]

Equipment Supplier: [illegible]

I.D. #: [illegible]

Date: [illegible]

BRAKES	✓	COOLING WATER	✓
AIR SYSTEM	✓	OPERATING CONTROLS	✓
TIRES/TRACKS	✓	LIGHTS/REFLECTORS	✓
HORN	✓	WINDSHIELD WIPERS	✓
SAFETY DEVICES	✓	FIRE EXTINGUISHER	NONE
GLASS	✓	BACKUP ALARM	✓
MIRRORS	✓	ENGINE OIL	Add/Check
DEFROSTER	✓	EXHAUST SYSTEM	✓
STEERING SYSTEM	✓	FLUID LEVELS	✓
WIRE ROPE	[illegible]	MAINTAINENCE MANUALS	✓
APPEARANCE		OPERATING MANUALS	✓
ELECTRICAL SYSTEM	✓	LOAD CHARTS	✓
INSPECTOR: [illegible]		DATE: [illegible]	
APPROVED: [signature] (HEALTH & SAFETY)		DATE: 14OCT94	
PHOTOGRAPHS TAKEN			

IT CORPORATION

PROJECT

EQUIPMENT INSPECTION LOG

Equipment Type: D3C Dozer

Equipment Supplier: Surplus Supply

I.D. #: X6SL[illegible]

Date: [illegible]

BRAKES	✓	COOLING WATER	✓
AIR SYSTEM	✓	OPERATING CONTROLS	✓
TIRES/TRACKS	✓	LIGHTS/REFLECTORS	✓
HORN	✓	WINDSHIELD WIPERS	N/A
SAFETY DEVICES	✓	FIRE EXTINGUISHER	✓
GLASS	N/A	BACKUP ALARM	✓
MIRRORS	✓	ENGINE OIL	✓ Add/Check
DEFROSTER	N/A	EXHAUST SYSTEM	✓
STEERING SYSTEM	✓	FLUID LEVELS	✓
WIRE ROPE	N/A	MAINTAINENCE MANUALS	✓
APPEARANCE		OPERATING MANUALS	✓
ELECTRICAL SYSTEM	✓	LOAD CHARTS	
INSPECTOR: [illegible]		DATE: [illegible]	
APPROVED: Andrew [illegible] (HEALTH & SAFETY)		DATE: 14OCT94	
PHOTOGRAPHS TAKEN			

Equipment Checklist for Inspections

Equipment Checklist

This is a guide indicating the numbered items on the inspection sheet that pertain to various units of construction equipment.

Mechanical Truck Crane	Lower Unit 1 through 39, 43 through 48; Upper Unit 50 through 69, 71 through 87; Boom 91 through 105
Crawler Crane	Lower Unit 1, 23, 40, 41, 42; Upper Unit 50 through 87; Boom 91 through 105
Hydraulic Truck Crane	Lower Unit 1 through 39, 43 through 48; Upper Unit 50 through 69, 71 through 78, 81 through 87; Boom 88 through 90, 93 through 99, 101 through 106
Hydraulic Cherry Picker	Lower Unit 1, 3 through 39, 43 through 48, 62 through 71, 81, 82, 84 through 87; Boom 88 through 90, 93 through 99, 101 through 105
Backhoe Mechanical	Lower Unit 1, 31, 40 through 42; Upper Unit 50 through 61, 64 through 87; Boom 89, 93 through 97, 101 through 103, 106
Backhoe Hydraulic Rubber Tire	Lower Unit 1, 31, 34, 39, 49; Upper Unit 50 through 61, 64, 65, 68 through 70, 72 through 78, 81 through 87; Boom 88, 89, 93 through 97, 106
Backhoe Hydraulic Crawler	Lower Unit 1, 31, 40 through 42; Upper Unit 50 through 61, 64, 65, 68 through 70, 72 through 78, 81 through 87; Boom 88, 89, 93 through 97, 106
Loader-Dozer Crawler	1, 3 through 8, 10 through 16, 19, 22 through 25, 27 through 32, 34, 38, 40 through 49, 106
Loader-Dozer Rubber Tire	1, 3 through 8, 10 through 32, 34 through 39, 43 through 49, 106
Air Compressor	1, 3 through 8, 12, 22 through 24, 27 through 33, 38, 39, 43 through 46
Forklift Truck	1, 3 through 7, 10 through 20, 22 through 32, 38, 39, 43 through 49
Manlift Boom Type (JLG)	1, 3 through 14, 22 through 32, 34 through 39, 43 through 47, 49, 68 through 70, 81, 86
Welding Machine Pump Generators Mixers (Gas & Diesel)	1, 3 through 7, 12, 22 through 25, 27 through 32, 38, 39, 44 through 46
Trailers	1, 10, 17, 18, 20, 21, 39, 44, 45, 48

CONTRACT UNIT #

EQUIPMENT CAT E120B EXCAVATOR

OTHER

T EQUIPMENT INSPECTION

Initial & Final)

☒ Initial ☐ Final

DATE 14 OCT 94

INSP. BY Andrew Johnson / Perry Copeland

APPROVED

Item No.	Lower Unit	(✓)	Item No.	Lower Unit (Continued)	(✓)	Item No.	Upper Unit (Continued)	(✓)
1	General Appearance	✓	37	O'Rigger Pads		72	Oil Level	✓
2	Mileage		38	Clutch, Trans., Rear		73	Water Level	✓
3	Engine Hrs.		39	Tires		74	Battery Cond.	✓
4	Oil Pressure		40	Drive Sprockets	✓	75	Battery Level	✓
5	Water Temp.		41	Track Rollers	✓	76	Battery Cables	✓
6	Amp. Meter		42	Tracks	✓	77	Starting Ability	✓
7	Fuel Level		43	Manuals		78	Air System	N/A
8	Air Pressure		44	Fire Extinguisher		79	Clutches	
9	Lo Air Warning		45	Electrical System		80	Linings	
10	Brakes		46	Exhaust System		81	House rollers	✓
11	Parking Brake		47	Steering		82	Lubrication Cond.	✓
12	Throttle		48	Cab Heater or Air Cond.		83	Manuals	✓
13	Back Up Alarm		49	Lift & Tilt Mech.		84	Electrical System	✓
14	Horn			**Upper Unit**		85	Exhaust System	✓
15	Wiper		50	General Appearance	✓	86	Guards	✓
16	Mirrors		51	Engine Hours	132	87	Cab Heater or Air Cond.	✓
17	Stop Lights		52	Inst. Panel Appearance	✓		**Boom**	
18	Clearance Lights		53	Oil Pressure	✓	88	Hyd. System	
19	Headlights		54	Water Temperature	✓	89	Boom Sections	✓
20	Turn Signals		55	Fuel Level	✓	90	Wear Pads	
21	4-Way Flashers		56	Air Pressure	N/A	91	Main Cords	
22	General Engine Cond.		57	Lo Air Warning	N/A	92	Lattice	
23	Oil Level		58	Parking Brake	N/A	93	Pin Holes	✓
24	Water Level		59	Horn	✓	94	Pins	✓
25	Transmission Level		60	Wipers	✓	95	Cotter Pins	✓
26	Power Steering Level		61	Lights	✓	96	Shackles & Sockets	✓
27	Battery Condition		62	Load Indicator		97	Sheaves (All)	✓
28	Battery Level		63	Capacity Chart		98	Load Hook Block	
29	Battery Cables		64	Throttles (Hand & Foot)	✓	99	Overhaul Ball	
30	Fan Belts		65	House Lock	✓	100	Boom Cable	
31	Lubrication Cond.	✓	66	Main Hoist Mech.		101	Pendent Cables	
32	Starting Ability		67	Aux. Hoist Mech.		102	Main Load Cable	
33	Air System		68	Swing Mech.	✓	103	Aux. Load Cable	
34	Hyd. System		69	Boom Mech.	✓	104	Boom Angle Indicator	
35	O'Rigger Boxes		70	Travel Mech.	✓	105	Jib	
36	O'Rigger Beams		71	Boom Dog		106	Bucket	

NOTE: Use reverse side for comments. Enter by Item No.

Are rated load capacities, recommended operating speeds, special hazard warnings or instructions, hand signals posted and visible to the operator?

☐ Yes ☐ No

IT CORPORATION

PROJECT

EQUIPMENT INSPECTION LOG

Equipment Type: LOADER

Equipment Supplier: IT 966

I.D. #:

Date: 10-20-94

BRAKES	✓ N/A	COOLING WATER	
AIR SYSTEM	✓ N/A	OPERATING CONTROLS	✓
TIRES/TRACKS	✓	LIGHTS/REFLECTORS	✓
HORN	✓	WINDSHIELD WIPERS	✓
SAFETY DEVICES	✓	FIRE EXTINGUISHER	✓
GLASS	✓	BACKUP ALARM	✓
MIRRORS	✓	ENGINE OIL ✓	Add/Check ✓
DEFROSTER	✓	EXHAUST SYSTEM	✓
STEERING SYSTEM	✓	FLUID LEVELS	✓
WIRE ROPE	NA	MAINTAINENCE MANUALS	✓
APPEARANCE	✓	OPERATING MANUALS	✓
ELECTRICAL SYSTEM	✓	LOAD CHARTS	NA
INSPECTOR:	A. Moore	DATE:	10-20-94
APPROVED: (HEALTH &SAFETY)		DATE:	
PHOTOGRAPHS TAKEN			

IT CORPORATION

PROJECT

EQUIPMENT INSPECTION LOG

Equipment Type: E 120 B

Equipment Supplier: SSS

I.D. #: 2ZF06111

Date: 10-20-94

BRAKES	✓	COOLING WATER	✓
AIR SYSTEM	✓	OPERATING CONTROLS	✓
TIRES/TRACKS	✓	LIGHTS/REFLECTORS	✓
HORN	✓	WINDSHIELD WIPERS	✓
SAFETY DEVICES	✓	FIRE EXTINGUISHER	✓
GLASS	✓	BACKUP ALARM	✓
MIRRORS	✓	ENGINE OIL	✓ Add/Check
DEFROSTER	✓	EXHAUST SYSTEM	✓
STEERING SYSTEM	✓	FLUID LEVELS	✓
WIRE ROPE	✓	MAINTAINENCE MANUALS	✓
APPEARANCE	✓	OPERATING MANUALS	✓
ELECTRICAL SYSTEM	✓	LOAD CHARTS	✓
INSPECTOR: [signature]		DATE: 10-20-94	
APPROVED: (HEALTH &SAFETY)		DATE:	
PHOTOGRAPHS TAKEN			

IT CORPORATION

PROJECT

EQUIPMENT INSPECTION LOG

Equipment Type: FRONT END LOADER

Equipment Supplier: CAT

I.D. #: X3C[illegible] Model # TT[illegible]

Date: 10/20/94

BRAKES	✓	COOLING WATER	✓
AIR SYSTEM	✓	OPERATING CONTROLS	✓
TIRES/TRACKS	✓	LIGHTS/REFLECTORS	✓
HORN	✓	WINDSHIELD WIPERS	✓
SAFETY DEVICES	✓	FIRE EXTINGUISHER	✓
GLASS	✓	BACKUP ALARM	✓
MIRRORS	✓	ENGINE OIL ✓	~~Add~~/Check
DEFROSTER	✓	EXHAUST SYSTEM	✓
STEERING SYSTEM	✓	FLUID LEVELS	✓
WIRE ROPE	N/A	MAINTAINENCE MANUALS	✓
APPEARANCE	✓	OPERATING MANUALS	✓
ELECTRICAL SYSTEM	✓	LOAD CHARTS	✓
INSPECTOR: Rick Folsom Richard M. Folsom		DATE: 10/20/94	
APPROVED: [illegible] (HEALTH &SAFETY)		DATE: [illegible]	
PHOTOGRAPHS TAKEN			

IT CORPORATION

PROJECT

EQUIPMENT INSPECTION LOG

Equipment Type: FRONT END LOADER

Equipment Supplier: CAT

I.D. #: 6ZF00395 MODEL # IT15F

Date: 10/20/96

BRAKES	✓	COOLING WATER	✓
AIR SYSTEM	✓	OPERATING CONTROLS	✓
TIRES/TRACKS	✓	LIGHTS/REFLECTORS	✓
HORN	✓	WINDSHIELD WIPERS	✓
SAFETY DEVICES	✓	FIRE EXTINGUISHER	✓
GLASS	✓	BACKUP ALARM	✓
MIRRORS	✓	ENGINE OIL ✓	~~Add~~/Check
DEFROSTER	✓	EXHAUST SYSTEM	✓
STEERING SYSTEM	✓	FLUID LEVELS	✓
WIRE ROPE	~~✓~~ N/A	MAINTAINENCE MANUALS	✓
APPEARANCE	✓	OPERATING MANUALS	✓
ELECTRICAL SYSTEM	✓	LOAD CHARTS	✓
INSPECTOR: Kyll. Folsom R.M. Folsom		DATE: 10/20/96	
APPROVED: (HEALTH &SAFETY)		DATE:	
PHOTOGRAPHS TAKEN			

IT CORPORATION

PROJECT

EQUIPMENT INSPECTION LOG

Equipment Type: Loader 966

Equipment Supplier:

I.D. #:

Date: 10-21-94

BRAKES	✓	COOLING WATER	✓
AIR SYSTEM	✓	OPERATING CONTROLS	✓
TIRES/TRACKS	✓	LIGHTS/REFLECTORS	✓
HORN	✓	WINDSHIELD WIPERS	✓
SAFETY DEVICES	✓	FIRE EXTINGUISHER	✓
GLASS	✓	BACKUP ALARM	✓
MIRRORS	✓	ENGINE OIL ✓ Add/Check	
DEFROSTER	✓	EXHAUST SYSTEM	✓
STEERING SYSTEM	✓	FLUID LEVELS	✓
WIRE ROPE	N/A	MAINTAINENCE MANUALS	✓
APPEARANCE	✓	OPERATING MANUALS	✓
ELECTRICAL SYSTEM	✓	LOAD CHARTS	N/A
INSPECTOR: Perry Cleveland		DATE:	
APPROVED: [illegible] (HEALTH &SAFETY)		DATE: 10-21-94	
PHOTOGRAPHS TAKEN			

IT CORPORATION

PROJECT

EQUIPMENT INSPECTION LOG

Equipment Type: 40R E ~~110~~ 120

Equipment Supplier:

I.D. #:

Date: 10-21-94

BRAKES	N/A	COOLING WATER	✓
AIR SYSTEM	N/A	OPERATING CONTROLS	✓
TIRES/TRACKS	✓	LIGHTS/REFLECTORS	✓
HORN	✓	WINDSHIELD WIPERS	✓
SAFETY DEVICES	✓	FIRE EXTINGUISHER	✓
GLASS	✓	BACKUP ALARM	✓
MIRRORS	✓	ENGINE OIL Add/Check	✓
DEFROSTER	✓	EXHAUST SYSTEM	✓
STEERING SYSTEM	✓	FLUID LEVELS	✓
WIRE ROPE	N/A	MAINTAINENCE MANUALS	✓
APPEARANCE	✓	OPERATING MANUALS	✓
ELECTRICAL SYSTEM	✓	LOAD CHARTS	N/A
INSPECTOR: Jim Meek		DATE: 10-21-94	
APPROVED: [illegible] (HEALTH &SAFETY)		DATE: 10-21-94	
PHOTOGRAPHS TAKEN			

IT CORPORATION

PROJECT

EQUIPMENT INSPECTION LOG

Equipment Type: Loader IT28 F

Equipment Supplier:

I.D. #:

Date: 10-21-94

BRAKES	✓	COOLING WATER	✓
AIR SYSTEM	✓	OPERATING CONTROLS	✓
TIRES/TRACKS	✓	LIGHTS/REFLECTORS	✓
HORN	✓	WINDSHIELD WIPERS	✓
SAFETY DEVICES	✓	FIRE EXTINGUISHER	✓
GLASS	✓	BACKUP ALARM	✓
MIRRORS	✓	ENGINE OIL ✓ Add/Check	
DEFROSTER	✓	EXHAUST SYSTEM	✓
STEERING SYSTEM	✓	FLUID LEVELS	✓
WIRE ROPE	N/A	MAINTAINENCE MANUALS	✓
APPEARANCE	✓	OPERATING MANUALS	✓
ELECTRICAL SYSTEM	✓	LOAD CHARTS	N/A
INSPECTOR: Perry Copeland		DATE:	
APPROVED: (HEALTH &SAFETY)		DATE: 10-21-94	
PHOTOGRAPHS TAKEN			

IT CORPORATION

PROJECT

EQUIPMENT INSPECTION LOG

Equipment Type: FRONT END LOADER

Equipment Supplier: S.S.S.

I.D. #: 1728F

Date: 10-22-94

BRAKES	✓	COOLING WATER	✓
AIR SYSTEM	✓	OPERATING CONTROLS	✓
TIRES/TRACKS	✓	LIGHTS/REFLECTORS	✓
HORN	✓	WINDSHIELD WIPERS	✓
SAFETY DEVICES	✓	FIRE EXTINGUISHER	✓
GLASS	✓	BACKUP ALARM	✓
MIRRORS	✓	ENGINE OIL ✓ Add/Check	
DEFROSTER	✓	EXHAUST SYSTEM	✓
STEERING SYSTEM	✓	FLUID LEVELS	✓
WIRE ROPE	NA	MAINTAINENCE MANUALS	✓
APPEARANCE	✓	OPERATING MANUALS	✓
ELECTRICAL SYSTEM	✓	LOAD CHARTS	✓
INSPECTOR: PETE CLAUD SCOTT HOPKINS		DATE: 10-22-94	
APPROVED: _____ (HEALTH &SAFETY)		DATE: _____	
PHOTOGRAPHS TAKEN			

IT CORPORATION

PROJECT

EQUIPMENT INSPECTION LOG

Equipment Type: FRONT END LOADER

Equipment Supplier: S. S. S.

I.D. #: 1T18F

Date: 10-22-94

BRAKES	✓	COOLING WATER	✓
AIR SYSTEM	✓	OPERATING CONTROLS	✓
TIRES/TRACKS	✓	LIGHTS/REFLECTORS	✓
HORN	✓	WINDSHIELD WIPERS	✓
SAFETY DEVICES	✓	FIRE EXTINGUISHER	✓
GLASS	✓	BACKUP ALARM	✓
MIRRORS	✓	ENGINE OIL ✓ Add/Check	
DEFROSTER	✓	EXHAUST SYSTEM	✓
STEERING SYSTEM	✓	FLUID LEVELS	✓
WIRE ROPE	✓ NA	MAINTAINENCE MANUALS	✓
APPEARANCE	✓	OPERATING MANUALS	✓
ELECTRICAL SYSTEM	✓	LOAD CHARTS	✓
INSPECTOR: PETE OLND		DATE: 10-22-94	
APPROVED: _____ (HEALTH &SAFETY)		DATE: _____	
PHOTOGRAPHS TAKEN			

IT CORPORATION

PROJECT

EQUIPMENT INSPECTION LOG

Equipment Type: E120 B

Equipment Supplier: Syracuse Supply

I.D. #: 2ZF0611

Date: 10-28-94

BRAKES	✓	COOLING WATER	✓
AIR SYSTEM	✓	OPERATING CONTROLS	✓
TIRES/TRACKS	✓	LIGHTS/REFLECTORS	✓
HORN	✓	WINDSHIELD WIPERS	✓
SAFETY DEVICES	✓	FIRE EXTINGUISHER	✓
GLASS	✓	BACKUP ALARM	✓
MIRRORS	✓	ENGINE OIL	✓ Add/Check
DEFROSTER	✓	EXHAUST SYSTEM	✓
STEERING SYSTEM	✓	FLUID LEVELS	✓
WIRE ROPE	NA	MAINTAINENCE MANUALS	✓
APPEARANCE	✓	OPERATING MANUALS	✓
ELECTRICAL SYSTEM	✓	LOAD CHARTS	✓
INSPECTOR:	[illegible]	DATE:	
APPROVED: (HEALTH &SAFETY)	[signature]	DATE:	11/2/94
PHOTOGRAPHS TAKEN			

IT CORPORATION

PROJECT

EQUIPMENT INSPECTION LOG

Equipment Type: 966 Loader

Equipment Supplier: Superior Supply

I.D. #:

Date: 10-28-94

BRAKES	✓	COOLING WATER	✓
AIR SYSTEM	✓	OPERATING CONTROLS	✓
TIRES/TRACKS	✓	LIGHTS/REFLECTORS	✓
HORN	✓	WINDSHIELD WIPERS	✓
SAFETY DEVICES	✓	FIRE EXTINGUISHER	✓
GLASS	✓	BACKUP ALARM	✓
MIRRORS	✓	ENGINE OIL ✓	Add/Check
DEFROSTER	✓	EXHAUST SYSTEM	✓
STEERING SYSTEM	✓	FLUID LEVELS	✓
WIRE ROPE	NA	MAINTAINENCE MANUALS	✓
APPEARANCE	✓	OPERATING MANUALS	✓
ELECTRICAL SYSTEM	✓	LOAD CHARTS	✓
INSPECTOR:	[signature]	DATE:	10-28-94
APPROVED: (HEALTH &SAFETY)	[signature]	DATE:	11/2/94
PHOTOGRAPHS TAKEN			

IT CORPORATION

PROJECT

EQUIPMENT INSPECTION LOG

Equipment Type: 966 Loader

Equipment Supplier: Syracuse Supply

I.D. #:

Date: 10-31-94

BRAKES	✓	COOLING WATER	✓
AIR SYSTEM	—	OPERATING CONTROLS	—
TIRES/TRACKS	—	LIGHTS/REFLECTORS	—
HORN	—	WINDSHIELD WIPERS	—
SAFETY DEVICES	—	FIRE EXTINGUISHER	—
GLASS	—	BACKUP ALARM	—
MIRRORS	—	ENGINE OIL	— Add/Check
DEFROSTER	—	EXHAUST SYSTEM	—
STEERING SYSTEM	—	FLUID LEVELS	—
WIRE ROPE	—	MAINTAINENCE MANUALS	—
APPEARANCE	—	OPERATING MANUALS	—
ELECTRICAL SYSTEM	—	LOAD CHARTS	—
INSPECTOR: Ed [illegible]		DATE: 10-31-94	
APPROVED: [illegible] (HEALTH &SAFETY)		DATE: 11/2/94	
PHOTOGRAPHS TAKEN			

IT CORPORATION

PROJECT

EQUIPMENT INSPECTION LOG

Equipment Type: E120 B B.H.

Equipment Supplier: Syracuse Supply

I.D. #: 2Z F0611

Date: 10-31-94

BRAKES	✓	COOLING WATER	✓
AIR SYSTEM	✓	OPERATING CONTROLS	✓
TIRES/TRACKS	✓	LIGHTS/REFLECTORS	✓
HORN	✓	WINDSHIELD WIPERS	✓
SAFETY DEVICES	✓	FIRE EXTINGUISHER	✓
GLASS	✓	BACKUP ALARM	✓
MIRRORS	✓	ENGINE OIL	✓ Add/Check
DEFROSTER	✓	EXHAUST SYSTEM	✓
STEERING SYSTEM	✓	FLUID LEVELS	✓
WIRE ROPE	N A	MAINTAINENCE MANUALS	✓
APPEARANCE	✓	OPERATING MANUALS	✓
ELECTRICAL SYSTEM	✓	LOAD CHARTS	✓
INSPECTOR:	[signature]	DATE:	10-31-94
APPROVED: (HEALTH &SAFETY)	[signature]	DATE:	11/2/94
PHOTOGRAPHS TAKEN			

IT CORPORATION

PROJECT

EQUIPMENT INSPECTION LOG

Equipment Type: TT 28F Loader

Equipment Supplier: Syracuse Supply

I.D. #: X3CR00713

Date: 10-31-94

BRAKES	✓	COOLING WATER	✓
AIR SYSTEM	✓	OPERATING CONTROLS	✓
TIRES/TRACKS	✓	LIGHTS/REFLECTORS	✓
HORN	✓	WINDSHIELD WIPERS	✓
SAFETY DEVICES	✓	FIRE EXTINGUISHER	✓
GLASS	✓	BACKUP ALARM	✓
MIRRORS	✓	ENGINE OIL	Add/Check
DEFROSTER	✓	EXHAUST SYSTEM	✓
STEERING SYSTEM	✓	FLUID LEVELS	✓
WIRE ROPE	ND	MAINTAINENCE MANUALS	✓
APPEARANCE	✓	OPERATING MANUALS	✓
ELECTRICAL SYSTEM	✓	LOAD CHARTS	
INSPECTOR:	Ed Z	DATE:	10-31-94
APPROVED: (HEALTH & SAFETY)	[signature]	DATE:	11/2/94
PHOTOGRAPHS TAKEN			

IT CORPORATION

PROJECT

EQUIPMENT INSPECTION LOG

Equipment Type: IT 18 F

Equipment Supplier: Syracuse Supply

I.D. #: 62E00385

Date: 11-1-94

BRAKES	✓	COOLING WATER	✓
AIR SYSTEM	✓	OPERATING CONTROLS	✓
TIRES/TRACKS	✓	LIGHTS/REFLECTORS	✓
HORN	✓	WINDSHIELD WIPERS	✓
SAFETY DEVICES	✓	FIRE EXTINGUISHER	✓
GLASS	✓	BACKUP ALARM	✓
MIRRORS	✓	ENGINE OIL	Add/Check
DEFROSTER	✓	EXHAUST SYSTEM	✓
STEERING SYSTEM	✓	FLUID LEVELS	✓
WIRE ROPE	NA	MAINTAINENCE MANUALS	✓
APPEARANCE	✓	OPERATING MANUALS	✓
ELECTRICAL SYSTEM	✓	LOAD CHARTS	✓
INSPECTOR:	EdI	DATE:	11-1-94
APPROVED: (HEALTH & SAFETY)	[signature]	DATE:	11/2/94
PHOTOGRAPHS TAKEN			

IT CORPORATION

PROJECT

EQUIPMENT INSPECTION LOG

Equipment Type: PAYLOADER 966

Equipment Supplier: S.S.S

I.D. #: 966

Date: 11-1-94

BRAKES	✓	COOLING WATER	✓
AIR SYSTEM	✓	OPERATING CONTROLS	✓
TIRES/TRACKS	✓	LIGHTS/REFLECTORS	✓
HORN	✓	WINDSHIELD WIPERS	✓
SAFETY DEVICES	✓	FIRE EXTINGUISHER	✓
GLASS	✓	BACKUP ALARM	✓
MIRRORS	✓	ENGINE OIL ✓	Add/Check ✓
DEFROSTER	✓	EXHAUST SYSTEM	✓
STEERING SYSTEM	✓	FLUID LEVELS	✓
WIRE ROPE	NA	MAINTAINENCE MANUALS	✓
APPEARANCE	Good	OPERATING MANUALS	✓
ELECTRICAL SYSTEM	✓	LOAD CHARTS	NA
INSPECTOR:	J Moore	DATE:	11-1-94
APPROVED: (HEALTH & SAFETY)	[signature]	DATE:	11/2/94
PHOTOGRAPHS TAKEN			

IT CORPORATION

PROJECT

EQUIPMENT INSPECTION LOG

Equipment Type: IT 28F

Equipment Supplier: Syracuse Supply

I.D. #: X3CR00713

Date: 11-1-94

BRAKES	✓	COOLING WATER	✓
AIR SYSTEM	✓	OPERATING CONTROLS	✓
TIRES/TRACKS	✓	LIGHTS/REFLECTORS	✓
HORN	✓	WINDSHIELD WIPERS	✓
SAFETY DEVICES	✓	FIRE EXTINGUISHER	✓
GLASS	✓	BACKUP ALARM	✓
MIRRORS	✓	ENGINE OIL	Add/Check
DEFROSTER	✓	EXHAUST SYSTEM	✓
STEERING SYSTEM	✓	FLUID LEVELS	✓
WIRE ROPE	NA	MAINTAINENCE MANUALS	✓
APPEARANCE	✓	OPERATING MANUALS	✓
ELECTRICAL SYSTEM	✓	LOAD CHARTS	✓
INSPECTOR:	Ed Z	DATE:	11-1-94
APPROVED: (HEALTH & SAFETY)	[signature]	DATE:	11/2/94
PHOTOGRAPHS TAKEN			

IT CORPORATION

PROJECT

EQUIPMENT INSPECTION LOG

Equipment Type: IT 28

Equipment Supplier: Syracuse Supply

I.D. #: 3CL00713

Date: 11-2-94

BRAKES	✓	COOLING WATER	✓
AIR SYSTEM	✓	OPERATING CONTROLS	✓
TIRES/TRACKS	✓	LIGHTS/REFLECTORS	✓
HORN	✓	WINDSHIELD WIPERS	✓
SAFETY DEVICES	✓	FIRE EXTINGUISHER	✓
GLASS	✓	BACKUP ALARM	✓
MIRRORS	✓	ENGINE OIL	✓ Add/Check
DEFROSTER	✓	EXHAUST SYSTEM	✓
STEERING SYSTEM	✓	FLUID LEVELS	✓
WIRE ROPE	NA	MAINTAINENCE MANUALS	✓
APPEARANCE	✓	OPERATING MANUALS	✓
ELECTRICAL SYSTEM	✓	LOAD CHARTS	✓
INSPECTOR:	[signature]	DATE:	11-2-94
APPROVED:	[signature] (HEALTH & SAFETY)	DATE:	11/3/94
PHOTOGRAPHS TAKEN			

IT CORPORATION

PROJECT

EQUIPMENT INSPECTION LOG

Equipment Type: PAY LOADER 966

Equipment Supplier: S. S. S.

I.D. #: 966

Date: 11-3-94

BRAKES	✓	COOLING WATER	✓
AIR SYSTEM	✓	OPERATING CONTROLS	✓
TIRES/TRACKS	✓	LIGHTS/REFLECTORS	✓
HORN	✓	WINDSHIELD WIPERS	✓
SAFETY DEVICES	✓	FIRE EXTINGUISHER	✓
GLASS	✓	BACKUP ALARM	✓
MIRRORS	✓	ENGINE OIL ✓	Add/Check ✓
DEFROSTER	✓	EXHAUST SYSTEM	✓
STEERING SYSTEM	✓	FLUID LEVELS	✓
WIRE ROPE	NA	MAINTAINENCE MANUALS	✓
APPEARANCE	DIRTY	OPERATING MANUALS	✓
ELECTRICAL SYSTEM	✓	LOAD CHARTS	N/A
INSPECTOR:	T Moore	DATE:	11-3-94
APPROVED: (HEALTH & SAFETY)	[signature]	DATE:	11/4/94
PHOTOGRAPHS TAKEN			

IT CORPORATION

PROJECT

EQUIPMENT INSPECTION LOG

Equipment Type: E120 B

Equipment Supplier: Surcruse Supply

I.D. #: 2ZF06111

Date: 11-3-94

BRAKES	✓	COOLING WATER	✓
AIR SYSTEM	✓	OPERATING CONTROLS	✓
TIRES/TRACKS	✓	LIGHTS/REFLECTORS	✓
HORN	✓	WINDSHIELD WIPERS	✓
SAFETY DEVICES	✓	FIRE EXTINGUISHER	✓
GLASS	✓	BACKUP ALARM	✓
MIRRORS	✓	ENGINE OIL ✓	Add/Check
DEFROSTER	✓	EXHAUST SYSTEM	✓
STEERING SYSTEM	✓	FLUID LEVELS	✓
WIRE ROPE	NA	MAINTAINENCE MANUALS	✓
APPEARANCE	✓	OPERATING MANUALS	✓
ELECTRICAL SYSTEM	✓	LOAD CHARTS	✓
INSPECTOR: Ed Fr		DATE: 11-3-94	
APPROVED: Bob B (HEALTH &SAFETY)		DATE: 11/4/94	
PHOTOGRAPHS TAKEN			

IT CORPORATION

PROJECT

EQUIPMENT INSPECTION LOG

Equipment Type: E120B

Equipment Supplier: Syracuse Supply

I.D. #: 22F06111

Date: 11-4-94

BRAKES	✓	COOLING WATER	✓
AIR SYSTEM	✓	OPERATING CONTROLS	✓
TIRES/TRACKS	✓	LIGHTS/REFLECTORS	✓
HORN	✓	WINDSHIELD WIPERS	✓
SAFETY DEVICES	✓	FIRE EXTINGUISHER	✓
GLASS	✓	BACKUP ALARM	✓
MIRRORS	✓	ENGINE OIL	Add/Check
DEFROSTER	✓	EXHAUST SYSTEM	✓
STEERING SYSTEM	✓	FLUID LEVELS	✓
WIRE ROPE	✓	MAINTAINENCE MANUALS	✓
APPEARANCE	✓	OPERATING MANUALS	✓
ELECTRICAL SYSTEM	✓	LOAD CHARTS	✓
INSPECTOR:	El F	DATE:	11-4-94
APPROVED: (HEALTH & SAFETY)	Bob B	DATE:	11/5/94
PHOTOGRAPHS TAKEN			

IT CORPORATION

PROJECT

EQUIPMENT INSPECTION LOG

Equipment Type: PayLoader 966

Equipment Supplier: S.S.S

I.D. #: 966

Date: 11-4-94

BRAKES	✓	COOLING WATER	✓
AIR SYSTEM	✓	OPERATING CONTROLS	✓
TIRES/TRACKS	✓	LIGHTS/REFLECTORS	✓
HORN	✓	WINDSHIELD WIPERS	✓
SAFETY DEVICES	✓	FIRE EXTINGUISHER	✓
GLASS	✓	BACKUP ALARM	✓
MIRRORS	✓	ENGINE OIL ✓	Add/Check ✓
DEFROSTER	✓	EXHAUST SYSTEM	✓
STEERING SYSTEM	✓	FLUID LEVELS	✓
WIRE ROPE	NA	MAINTAINENCE MANUALS	✓
APPEARANCE	✓	OPERATING MANUALS	✓
ELECTRICAL SYSTEM	✓	LOAD CHARTS	NA
INSPECTOR:	J. Moore	DATE:	11-4-94
APPROVED: (HEALTH &SAFETY)	[signature]	DATE:	11/5/94
PHOTOGRAPHS TAKEN			

IT CORPORATION

PROJECT

EQUIPMENT INSPECTION LOG

Equipment Type: 966

Equipment Supplier: S.S.S.

I.D. #: 966

Date: 11-6-94

BRAKES	✓	COOLING WATER	✓
AIR SYSTEM	✓	OPERATING CONTROLS	✓
TIRES/TRACKS	✓	LIGHTS/REFLECTORS	✓
HORN	✓	WINDSHIELD WIPERS	✓
SAFETY DEVICES	✓	FIRE EXTINGUISHER	✓
GLASS	✓	BACKUP ALARM	✓
MIRRORS	✓	ENGINE OIL ✓	Add/Check ✓
DEFROSTER	✓	EXHAUST SYSTEM	✓
STEERING SYSTEM	✓	FLUID LEVELS	✓
WIRE ROPE	NA	MAINTAINENCE MANUALS	✓
APPEARANCE	✓	OPERATING MANUALS	✓
ELECTRICAL SYSTEM	✓	LOAD CHARTS	NA
INSPECTOR:	J Moore	DATE:	11-6-94
APPROVED:	[illegible] (HEALTH &SAFETY)	DATE:	11-12-94
PHOTOGRAPHS TAKEN			

IT CORPORATION

PROJECT

EQUIPMENT INSPECTION LOG

Equipment Type: D3C Dozer

Equipment Supplier: Syracuse Supply

I.D. #: [illegible]

Date: [illegible]

BRAKES	✓	COOLING WATER	✓
AIR SYSTEM	✓	OPERATING CONTROLS	✓
TIRES/TRACKS	✓	LIGHTS/REFLECTORS	✓
HORN	✓	WINDSHIELD WIPERS	✓
SAFETY DEVICES	✓	FIRE EXTINGUISHER	✓
GLASS	✓	BACKUP ALARM	✓
MIRRORS	✓	ENGINE OIL	Add/Check
DEFROSTER	✓	EXHAUST SYSTEM	✓
STEERING SYSTEM	✓	FLUID LEVELS	✓
WIRE ROPE	N/A	MAINTAINENCE MANUALS	✓
APPEARANCE	✓	OPERATING MANUALS	✓
ELECTRICAL SYSTEM	✓	LOAD CHARTS	✓
INSPECTOR: [illegible]		DATE: 11-7-94	
APPROVED: [illegible] (HEALTH &SAFETY)		DATE: 11-12-94	
PHOTOGRAPHS TAKEN			

IT CORPORATION

PROJECT

EQUIPMENT INSPECTION LOG

Equipment Type: IT 18F

Equipment Supplier: [illegible]

I.D. #: 628 [illegible]

Date: 11-7-94

BRAKES	✓	COOLING WATER	✓
AIR SYSTEM	✓	OPERATING CONTROLS	✓
TIRES/TRACKS	✓	LIGHTS/REFLECTORS	✓
HORN	✓	WINDSHIELD WIPERS	✓
SAFETY DEVICES	✓	FIRE EXTINGUISHER	✓
GLASS	✓	BACKUP ALARM	✓
MIRRORS	✓	ENGINE OIL	Add/Check
DEFROSTER	✓	EXHAUST SYSTEM	✓
STEERING SYSTEM	✓	FLUID LEVELS	✓
WIRE ROPE	N/A	MAINTAINENCE MANUALS	✓
APPEARANCE	✓	OPERATING MANUALS	✓
ELECTRICAL SYSTEM	✓	LOAD CHARTS	✓
INSPECTOR: [illegible]		DATE: 11-7-94	
APPROVED: [illegible] (HEALTH &SAFETY)		DATE: 11-12-94	
PHOTOGRAPHS TAKEN			

IT CORPORATION

PROJECT

EQUIPMENT INSPECTION LOG

Equipment Type: 966

Equipment Supplier: SSS

I.D. #: 966

Date: 11-7-94

BRAKES	✓	COOLING WATER	✓
AIR SYSTEM	✓	OPERATING CONTROLS	✓
TIRES/TRACKS	✓	LIGHTS/REFLECTORS	✓
HORN	✓	WINDSHIELD WIPERS	✓
SAFETY DEVICES	✓	FIRE EXTINGUISHER	✓
GLASS	✓	BACKUP ALARM	✓
MIRRORS	✓	ENGINE OIL ✓	Add/Check ✓
DEFROSTER	✓	EXHAUST SYSTEM	✓
STEERING SYSTEM	✓	FLUID LEVELS	✓
WIRE ROPE	NA	MAINTAINENCE MANUALS	✓
APPEARANCE	✓	OPERATING MANUALS	✓
ELECTRICAL SYSTEM	✓	LOAD CHARTS	✓
INSPECTOR: T Moore		DATE: 11-7-94	
APPROVED: (HEALTH &SAFETY)		DATE: 11-12-94	
PHOTOGRAPHS TAKEN			

IT CORPORATION

PROJECT

EQUIPMENT INSPECTION LOG

Equipment Type: TT 28F Loader

Equipment Supplier: X3CR00713 Surcruse Supply

I.D. #: X3CR00713

Date: 11-[illegible]-94

BRAKES	✓	COOLING WATER	✓
AIR SYSTEM	✓	OPERATING CONTROLS	✓
TIRES/TRACKS	✓	LIGHTS/REFLECTORS	✓
HORN	✓	WINDSHIELD WIPERS	✓
SAFETY DEVICES	✓	FIRE EXTINGUISHER	✓
GLASS	✓	BACKUP ALARM	✓
MIRRORS	✓	ENGINE OIL	Add/Check
DEFROSTER	✓	EXHAUST SYSTEM	✓
STEERING SYSTEM	✓	FLUID LEVELS	✓
WIRE ROPE	NA	MAINTAINENCE MANUALS	✓
APPEARANCE	✓	OPERATING MANUALS	✓
ELECTRICAL SYSTEM	✓	LOAD CHARTS	✓
INSPECTOR:	Ed [illegible]	DATE:	11-18-94
APPROVED:	[illegible] (HEALTH &SAFETY)	DATE:	11-12-94
PHOTOGRAPHS TAKEN			

IT CORPORATION

PROJECT

EQUIPMENT INSPECTION LOG

Equipment Type: E120B

Equipment Supplier: Syracuse Supply

I.D. #: 22EA111

Date: 11-11-94

BRAKES	✓	COOLING WATER	✓
AIR SYSTEM	✓	OPERATING CONTROLS	✓
TIRES/TRACKS	✓	LIGHTS/REFLECTORS	✓
HORN	✓	WINDSHIELD WIPERS	✓
SAFETY DEVICES	✓	FIRE EXTINGUISHER	✓
GLASS	✓	BACKUP ALARM	✓
MIRRORS	✓	ENGINE OIL	Add/Check
DEFROSTER	✓	EXHAUST SYSTEM	✓
STEERING SYSTEM	✓	FLUID LEVELS	✓
WIRE ROPE	N/A	MAINTAINENCE MANUALS	✓
APPEARANCE	✓	OPERATING MANUALS	✓
ELECTRICAL SYSTEM	✓	LOAD CHARTS	✓
INSPECTOR: SOT		DATE: 11-11-94	
APPROVED: Jeff Golesky (HEALTH &SAFETY)		DATE: 11-12-94	
PHOTOGRAPHS TAKEN			

IT CORPORATION

PROJECT

EQUIPMENT INSPECTION LOG

Equipment Type: D3C Dozer

Equipment Supplier: Superuse Supply

I.D. #: X6SL00291

Date: 11-11-94

BRAKES	✓	COOLING WATER	✓
AIR SYSTEM	✓	OPERATING CONTROLS	✓
TIRES/TRACKS	✓	LIGHTS/REFLECTORS	✓
HORN	✓	WINDSHIELD WIPERS	✓
SAFETY DEVICES	✓	FIRE EXTINGUISHER	✓
GLASS	✓	BACKUP ALARM	✓
MIRRORS	✓	ENGINE OIL ✓	Add/Check
DEFROSTER	✓	EXHAUST SYSTEM	✓
STEERING SYSTEM	✓	FLUID LEVELS	✓
WIRE ROPE	N/A	MAINTAINENCE MANUALS	✓
APPEARANCE	✓	OPERATING MANUALS	✓
ELECTRICAL SYSTEM	✓	LOAD CHARTS	✓
INSPECTOR:	Ed	DATE:	11-11-94
APPROVED:	[illegible] (HEALTH &SAFETY)	DATE:	11-12-94
PHOTOGRAPHS TAKEN			

IT CORPORATION

PROJECT

EQUIPMENT INSPECTION LOG

Equipment Type: Loader 966

Equipment Supplier: S.S.S.

I.D. #: 966

Date: 11-12-94

BRAKES	✓	COOLING WATER	✓
AIR SYSTEM	✓	OPERATING CONTROLS	✓
TIRES/TRACKS	✓	LIGHTS/REFLECTORS	✓
HORN	✓	WINDSHIELD WIPERS	✓
SAFETY DEVICES	✓	FIRE EXTINGUISHER	✓
GLASS	✓	BACKUP ALARM	✓
MIRRORS	✓	ENGINE OIL ✓	Add/Check ✓
DEFROSTER	✓	EXHAUST SYSTEM	✓
STEERING SYSTEM	✓	FLUID LEVELS	✓
WIRE ROPE	NA	MAINTAINENCE MANUALS	✓
APPEARANCE	—	OPERATING MANUALS	✓
ELECTRICAL SYSTEM	✓	LOAD CHARTS	✓
INSPECTOR: F Moore		DATE: 11-12-94	
APPROVED: [signature] (HEALTH & SAFETY)		DATE: 11-13-94	
PHOTOGRAPHS TAKEN			

IT CORPORATION

PROJECT

EQUIPMENT INSPECTION LOG

Equipment Type: 120 E B. H

Equipment Supplier:

I.D. #:

Date: 11-13-94

BRAKES	✓	COOLING WATER	✓
AIR SYSTEM	✓	OPERATING CONTROLS	✓
TIRES/TRACKS	✓	LIGHTS/REFLECTORS	✓
HORN	✓	WINDSHIELD WIPERS	✓
SAFETY DEVICES	✓	FIRE EXTINGUISHER	✓
GLASS	✓	BACKUP ALARM	✓
MIRRORS	✓	ENGINE OIL	Add/Check
DEFROSTER	✓	EXHAUST SYSTEM	✓
STEERING SYSTEM	✓	FLUID LEVELS	✓
WIRE ROPE	NA	MAINTAINENCE MANUALS	✓
APPEARANCE	✓	OPERATING MANUALS	✓
ELECTRICAL SYSTEM	✓	LOAD CHARTS	✓
INSPECTOR:	Ed [illegible]	DATE:	11-13-94
APPROVED:	[illegible] (HEALTH & SAFETY)	DATE:	11-15-94
PHOTOGRAPHS TAKEN			

IT CORPORATION

PROJECT

EQUIPMENT INSPECTION LOG

Equipment Type: D-3 Dozer

Equipment Supplier:

I.D. #:

Date: 11/14/94

BRAKES	✓	COOLING WATER	✓
AIR SYSTEM	N/A	OPERATING CONTROLS	✓
TIRES/TRACKS	✓	LIGHTS/REFLECTORS	✓
HORN	✓	WINDSHIELD WIPERS	N/A
SAFETY DEVICES	✓	FIRE EXTINGUISHER	✓
GLASS	N/A	BACKUP ALARM	✓
MIRRORS	✓	ENGINE OIL	✓ Add/Check
DEFROSTER	N/A	EXHAUST SYSTEM	✓
STEERING SYSTEM	✓	FLUID LEVELS	✓
WIRE ROPE	N/A	MAINTAINENCE MANUALS	✓
APPEARANCE	✓	OPERATING MANUALS	✓
ELECTRICAL SYSTEM	✓	LOAD CHARTS	✓
INSPECTOR:	Penny Copeland	DATE:	11/14/94
APPROVED:	Jeff Holeghest (HEALTH & SAFETY)	DATE:	11/15/94
PHOTOGRAPHS TAKEN			

IT CORPORATION

PROJECT

EQUIPMENT INSPECTION LOG

Equipment Type: 120 E B. H.

Equipment Supplier:

I.D. #:

Date: 11-14-94

BRAKES	✓	COOLING WATER	✓
AIR SYSTEM	✓	OPERATING CONTROLS	✓
TIRES/TRACKS	✓	LIGHTS/REFLECTORS	✓
HORN	✓	WINDSHIELD WIPERS	✓
SAFETY DEVICES	✓	FIRE EXTINGUISHER	✓
GLASS	✓	BACKUP ALARM	✓
MIRRORS	✓	ENGINE OIL	✓ Add/Check
DEFROSTER	✓	EXHAUST SYSTEM	✓
STEERING SYSTEM	✓	FLUID LEVELS	✓
WIRE ROPE	N/A	MAINTAINENCE MANUALS	✓
APPEARANCE	✓	OPERATING MANUALS	✓
ELECTRICAL SYSTEM	✓	LOAD CHARTS	✓
INSPECTOR:	LRT	DATE:	11-14-94
APPROVED:	Jeff Dougherty (HEALTH & SAFETY)	DATE:	11/15/94
PHOTOGRAPHS TAKEN			

IT CORPORATION

PROJECT

EQUIPMENT INSPECTION LOG

Equipment Type: 28 F Loader

Equipment Supplier:

I.D. #:

Date: 11/14/94

BRAKES	✓	COOLING WATER	✓
AIR SYSTEM	✓	OPERATING CONTROLS	✓
TIRES/TRACKS	✓	LIGHTS/REFLECTORS	✓
HORN	✓	WINDSHIELD WIPERS	✓
SAFETY DEVICES	✓	FIRE EXTINGUISHER	✓
GLASS	✓	BACKUP ALARM	✓
MIRRORS	✓	ENGINE OIL	✓ Add/~~Check~~
DEFROSTER	✓	EXHAUST SYSTEM	✓
STEERING SYSTEM	✓	FLUID LEVELS	✓
WIRE ROPE	N/A	MAINTAINENCE MANUALS	✓
APPEARANCE	✓	OPERATING MANUALS	✓
ELECTRICAL SYSTEM	✓	LOAD CHARTS	✓
INSPECTOR: Perry Copeland		DATE: 11/14/94	
APPROVED: Jeff Dougherty (HEALTH &SAFETY)		DATE: 11/15/94	
PHOTOGRAPHS TAKEN			

IT CORPORATION

PROJECT

EQUIPMENT INSPECTION LOG

Equipment Type: 18 F Loader

Equipment Supplier:

I.D. #:

Date: 11/14/94

BRAKES	✓	COOLING WATER	✓
AIR SYSTEM	✓	OPERATING CONTROLS	✓
TIRES/TRACKS	✓	LIGHTS/REFLECTORS	✓
HORN	✓	WINDSHIELD WIPERS	✓
SAFETY DEVICES	✓	FIRE EXTINGUISHER	✓
GLASS	✓	BACKUP ALARM	✓
MIRRORS	✓	ENGINE OIL	✓ Add/Check
DEFROSTER	✓	EXHAUST SYSTEM	✓
STEERING SYSTEM	✓	FLUID LEVELS	✓
WIRE ROPE	N/A	MAINTAINENCE MANUALS	✓
APPEARANCE	✓	OPERATING MANUALS	✓
ELECTRICAL SYSTEM	✓	LOAD CHARTS	✓
INSPECTOR:	Perry Copeland	DATE:	11/14/94
APPROVED:	Jeff Goleztuty (HEALTH & SAFETY)	DATE:	11/15/94
PHOTOGRAPHS TAKEN			

IT CORPORATION

PROJECT

EQUIPMENT INSPECTION LOG

Equipment Type: 966F Loader

Equipment Supplier:

I.D. #:

Date: 11/14/94

BRAKES	✓	COOLING WATER	✓
AIR SYSTEM	✓	OPERATING CONTROLS	✓
TIRES/TRACKS	✓	LIGHTS/REFLECTORS	✓
HORN	✓	WINDSHIELD WIPERS	✓
SAFETY DEVICES	✓	FIRE EXTINGUISHER	✓
GLASS	✓	BACKUP ALARM	✓
MIRRORS	✓	ENGINE OIL	✓ Add/Check
DEFROSTER	✓	EXHAUST SYSTEM	✓
STEERING SYSTEM	✓	FLUID LEVELS	✓
WIRE ROPE	N/A	MAINTAINENCE MANUALS	✓
APPEARANCE	✓	OPERATING MANUALS	✓
ELECTRICAL SYSTEM	✓	LOAD CHARTS	✓
INSPECTOR: Perry Copeland		DATE: 11/14/94	
APPROVED: Jeff Dolezal (HEALTH & SAFETY)		DATE: 11/15/94	
PHOTOGRAPHS TAKEN			

IT CORPORATION

PROJECT

EQUIPMENT INSPECTION LOG

Equipment Type: FRONT END loader

Equipment Supplier: Pat

I.D. #: 966

Date: 11-15-94

BRAKES	✓	COOLING WATER	✓
AIR SYSTEM	✓	OPERATING CONTROLS	✓
TIRES/TRACKS	✓	LIGHTS/REFLECTORS	✓
HORN	✓	WINDSHIELD WIPERS	✓
SAFETY DEVICES	✓	FIRE EXTINGUISHER	✓
GLASS	✓	BACKUP ALARM	✓
MIRRORS	✓	ENGINE OIL	OK Add/Check
DEFROSTER	✓	EXHAUST SYSTEM	✓
STEERING SYSTEM	✓	FLUID LEVELS	✓
WIRE ROPE	N/A	MAINTAINENCE MANUALS	✓
APPEARANCE	✓	OPERATING MANUALS	✓
ELECTRICAL SYSTEM	✓	LOAD CHARTS	✓
INSPECTOR:	FRANK [illegible]	DATE:	11-15-94
APPROVED:	Jeff [illegible] (HEALTH &SAFETY)	DATE:	11-15-94
PHOTOGRAPHS TAKEN			

IT CORPORATION

PROJECT

EQUIPMENT INSPECTION LOG

Equipment Type: 120E BH

Equipment Supplier: CAT

I.D. #:

Date: 11-15-94

BRAKES	✓	COOLING WATER	✓
AIR SYSTEM	✓	OPERATING CONTROLS	✓
TIRES/TRACKS	✓	LIGHTS/REFLECTORS	✓
HORN	✓	WINDSHIELD WIPERS	✓
SAFETY DEVICES	✓	FIRE EXTINGUISHER	✓
GLASS	✓	BACKUP ALARM	✓
MIRRORS	✓	ENGINE OIL	Add/Check
DEFROSTER	✓	EXHAUST SYSTEM	✓
STEERING SYSTEM	✓	FLUID LEVELS	✓
WIRE ROPE	NA	MAINTAINENCE MANUALS	✓
APPEARANCE	✓	OPERATING MANUALS	✓
ELECTRICAL SYSTEM	✓	LOAD CHARTS	✓
INSPECTOR:	Ed 7	DATE:	Ed 7
APPROVED:	Jeff Bolightly (HEALTH &SAFETY)	DATE:	11-15-94
PHOTOGRAPHS TAKEN			

IT CORPORATION

PROJECT

EQUIPMENT INSPECTION LOG

Equipment Type: FRONT END LOADER

Equipment Supplier: CAT

I.D. #: IT 28 F

Date: 11-15-94

BRAKES	✓	COOLING WATER	✓
AIR SYSTEM	✓	OPERATING CONTROLS	✓
TIRES/TRACKS	✓	LIGHTS/REFLECTORS	✓
HORN	✓	WINDSHIELD WIPERS	✓
SAFETY DEVICES	✓	FIRE EXTINGUISHER	~~DOSNT HAVE ONE~~ P.C
GLASS	✓	BACKUP ALARM	✓
MIRRORS	✓	ENGINE OIL	O.K. Add/Check
DEFROSTER	✓	EXHAUST SYSTEM	✓
STEERING SYSTEM	✓	FLUID LEVELS	✓
WIRE ROPE	N/A	MAINTAINENCE MANUALS	✓
APPEARANCE	GOOD	OPERATING MANUALS	✓
ELECTRICAL SYSTEM	✓	LOAD CHARTS	
INSPECTOR:	PETE CLOUD	DATE:	11-15-94
APPROVED:	Jeff Dolightly (HEALTH &SAFETY)	DATE:	11-15-94
PHOTOGRAPHS TAKEN			

IT CORPORATION

PROJECT

EQUIPMENT INSPECTION LOG

Equipment Type: Front End Loader

Equipment Supplier: CAT

I.D. #: IT 18 F

Date: 11/15/94

BRAKES	✓	COOLING WATER	✓
AIR SYSTEM	✓	OPERATING CONTROLS	✓
TIRES/TRACKS	✓	LIGHTS/REFLECTORS	✓
HORN	✓	WINDSHIELD WIPERS	✓
SAFETY DEVICES	✓	FIRE EXTINGUISHER	✓
GLASS	✓	BACKUP ALARM	✓
MIRRORS	✓	ENGINE OIL ✓	Add/Check
DEFROSTER	✓	EXHAUST SYSTEM	✓
STEERING SYSTEM	✓	FLUID LEVELS	✓
WIRE ROPE	N/A	MAINTAINENCE MANUALS	✓
APPEARANCE	✓	OPERATING MANUALS	✓
ELECTRICAL SYSTEM	✓	LOAD CHARTS	✓
INSPECTOR: [illegible]		DATE: 11/15/94	
APPROVED: Jeff [illegible] (HEALTH &SAFETY)		DATE: 11/15/94	
PHOTOGRAPHS TAKEN			

IT CORPORATION

PROJECT

EQUIPMENT INSPECTION LOG

Equipment Type: 966 Loader

Equipment Supplier: S.S.S.

I.D. #: 966

Date: 11-16-9

BRAKES	✓	COOLING WATER	✓
AIR SYSTEM	✓	OPERATING CONTROLS	✓
TIRES/TRACKS	✓	LIGHTS/REFLECTORS	✓
HORN	✓	WINDSHIELD WIPERS	✓
SAFETY DEVICES	✓	FIRE EXTINGUISHER	✓
GLASS	✓	BACKUP ALARM	✓
MIRRORS	✓	ENGINE OIL	✓ Add/Check 1 qt
DEFROSTER	✓	EXHAUST SYSTEM	✓
STEERING SYSTEM	✓	FLUID LEVELS	✓
WIRE ROPE	NA	MAINTAINENCE MANUALS	✓
APPEARANCE	—	OPERATING MANUALS	✓
ELECTRICAL SYSTEM	✓	LOAD CHARTS	✓
INSPECTOR: Frank Moore		DATE: 11-16-94	
APPROVED: Jeff Golightly (HEALTH & SAFETY)		DATE: 11/17/94	
PHOTOGRAPHS TAKEN			

IT CORPORATION

PROJECT

EQUIPMENT INSPECTION LOG

Equipment Type: Track Hole

Equipment Supplier: CAT

I.D. #: 120 B

Date: 11/16/94

BRAKES	✓	COOLING WATER	✓
AIR SYSTEM	N/A	OPERATING CONTROLS	✓
TIRES/TRACKS	✓	LIGHTS/REFLECTORS	✓
HORN	✓	WINDSHIELD WIPERS	✓
SAFETY DEVICES	✓	FIRE EXTINGUISHER	✓
GLASS	✓	BACKUP ALARM	✓
MIRRORS	✓	ENGINE OIL	✓ Add/Check
DEFROSTER	✓	EXHAUST SYSTEM	✓
STEERING SYSTEM	✓	FLUID LEVELS	✓
WIRE ROPE	N/A	MAINTAINENCE MANUALS	✓
APPEARANCE	✓	OPERATING MANUALS	✓
ELECTRICAL SYSTEM	✓	LOAD CHARTS	✓
INSPECTOR:	Perry Copeland	DATE:	11/16/94
APPROVED:	Jeff Bolightly (HEALTH &SAFETY)	DATE:	11/17/94
PHOTOGRAPHS TAKEN			

IT CORPORATION

PROJECT

EQUIPMENT INSPECTION LOG

Equipment Type: Loader

Equipment Supplier: CAT

I.D. #: IT 18 F

Date: 11/17/94

BRAKES	✓	COOLING WATER	✓
AIR SYSTEM	✓	OPERATING CONTROLS	✓
TIRES/TRACKS	✓	LIGHTS/REFLECTORS	✓
HORN	✓	WINDSHIELD WIPERS	✓
SAFETY DEVICES	✓	FIRE EXTINGUISHER	✓
GLASS	✓	BACKUP ALARM	✓
MIRRORS	✓	ENGINE OIL	✓ Add/Check
DEFROSTER	✓	EXHAUST SYSTEM	✓
STEERING SYSTEM	✓	FLUID LEVELS	✓
WIRE ROPE	N/A	MAINTAINENCE MANUALS	✓
APPEARANCE	✓	OPERATING MANUALS	✓
ELECTRICAL SYSTEM	✓	LOAD CHARTS	✓
INSPECTOR:	Robert R. Falso	DATE:	11/17/94
APPROVED: (HEALTH &SAFETY)	Jeff Dolightly	DATE:	11-17-94
PHOTOGRAPHS TAKEN			

IT CORPORATION

PROJECT

EQUIPMENT INSPECTION LOG

Equipment Type: Loader

Equipment Supplier: Cat

I.D. #: 966F

Date: 11/17/94

BRAKES	✓	COOLING WATER	✓
AIR SYSTEM	✓	OPERATING CONTROLS	✓
TIRES/TRACKS	✓	LIGHTS/REFLECTORS	✓
HORN	✓	WINDSHIELD WIPERS	✓
SAFETY DEVICES	✓	FIRE EXTINGUISHER	✓
GLASS	✓	BACKUP ALARM	✓
MIRRORS	✓	ENGINE OIL ✓	Add/Check
DEFROSTER	✓	EXHAUST SYSTEM	✓
STEERING SYSTEM	✓	FLUID LEVELS	✓
WIRE ROPE	N/A	MAINTAINENCE MANUALS	✓
APPEARANCE	✓	OPERATING MANUALS	✓
ELECTRICAL SYSTEM	✓	LOAD CHARTS	✓
INSPECTOR:	Percy Copeland	DATE:	11/17/94
APPROVED:	Jeff Holightly (HEALTH &SAFETY)	DATE:	11/17/94
PHOTOGRAPHS TAKEN			

IT CORPORATION

PROJECT

EQUIPMENT INSPECTION LOG

Equipment Type: 120 B.H

Equipment Supplier: CAT

I.D. #: 120B

Date: 11-17-94

BRAKES	✓	COOLING WATER	✓
AIR SYSTEM	✓	OPERATING CONTROLS	✓
TIRES/TRACKS	✓	LIGHTS/REFLECTORS	✓
HORN	✓	WINDSHIELD WIPERS	✓
SAFETY DEVICES	✓	FIRE EXTINGUISHER	✓
GLASS	✓	BACKUP ALARM	✓
MIRRORS	✓	ENGINE OIL	✓ Add/Check
DEFROSTER	✓	EXHAUST SYSTEM	✓
STEERING SYSTEM	✓	FLUID LEVELS	✓
WIRE ROPE	NA	MAINTAINENCE MANUALS	✓
APPEARANCE	✓	OPERATING MANUALS	✓
ELECTRICAL SYSTEM	✓	LOAD CHARTS	✓
INSPECTOR:	[signature]	DATE:	11-17-94
APPROVED:	Jeff Golightly (HEALTH & SAFETY)	DATE:	11-17-94
PHOTOGRAPHS TAKEN			

IT CORPORATION

PROJECT

EQUIPMENT INSPECTION LOG

Equipment Type: Loader

Equipment Supplier: Cat

I.D. #: IT 28F

Date: 11/17/94

BRAKES	✓	COOLING WATER	✓
AIR SYSTEM	✓	OPERATING CONTROLS	✓
TIRES/TRACKS	✓	LIGHTS/REFLECTORS	✓
HORN	✓	WINDSHIELD WIPERS	✓
SAFETY DEVICES	✓	FIRE EXTINGUISHER	✓
GLASS	✓	BACKUP ALARM	✓
MIRRORS	✓	ENGINE OIL	✓ Add/Check
DEFROSTER	✓	EXHAUST SYSTEM	✓
STEERING SYSTEM	✓	FLUID LEVELS	✓
WIRE ROPE	N/A	MAINTAINENCE MANUALS	✓
APPEARANCE	✓	OPERATING MANUALS	✓
ELECTRICAL SYSTEM	✓	LOAD CHARTS	
INSPECTOR:	[signature]	DATE:	11-17-94
APPROVED: (HEALTH &SAFETY)	[signature]	DATE:	11-17-94
PHOTOGRAPHS TAKEN			

IT CORPORATION

PROJECT

EQUIPMENT INSPECTION LOG

Equipment Type: Front End Loader

Equipment Supplier: Cat

I.D. #: IT28F

Date: 11/18/94

BRAKES	✓	COOLING WATER	✓
AIR SYSTEM	✓	OPERATING CONTROLS	✓
TIRES/TRACXS	✓	LIGHTS/REFLECTORS	✓
HORN	✓	WINDSHIELD WIPERS	✓
SAFETY DEVICES	✓	FIRE EXTINGUISHER	✓
GLASS	✓	BACKUP ALARM	✓
MIRRORS	✓	ENGINE OIL	✓ Add/Check
DEFROSTER	✓	EXHAUST SYSTEM	✓
STEERING SYSTEM	✓	FLUID LEVELS	✓
WIRE ROPE	N/A	MAINTAINENCE MANUALS	✓
APPEARANCE	✓	OPERATING MANUALS	✓
ELECTRICAL SYSTEM	✓	LOAD CHARTS	✓
INSPECTOR: [signature]		DATE: 11/18/94	
APPROVED: _____ (HEALTH &SAFETY)		DATE: _____	
PHOTOGRAPHS TAKEN			

IT CORPORATION

PROJECT

EQUIPMENT INSPECTION LOG

Equipment Type: FRONT END LOADER

Equipment Supplier: S.S.S.

I.D. #: 18

Date: 11-18-94

BRAKES ✓	COOLING WATER ✓
AIR SYSTEM ✓	OPERATING CONTROLS ✓
TIRES/TRACKS ✓	LIGHTS/REFLECTORS ✓
HORN ✓	WINDSHIELD WIPERS ✓
SAFETY DEVICES ✓	FIRE EXTINGUISHER ✓
GLASS ✓	BACKUP ALARM ✓
MIRRORS ✓	ENGINE OIL Little Low Add/Check
DEFROSTER ✓	EXHAUST SYSTEM ✓
STEERING SYSTEM ✓	FLUID LEVELS ✓
WIRE ROPE N/A	MAINTAINENCE MANUALS ✓
APPEARANCE ✓	OPERATING MANUALS ✓
ELECTRICAL SYSTEM ✓	LOAD CHARTS ✓
INSPECTOR: [signature]	DATE: 11-18-94
APPROVED: _____ (HEALTH &SAFETY)	DATE: _____
PHOTOGRAPHS TAKEN	

IT CORPORATION

PROJECT

EQUIPMENT INSPECTION LOG

Equipment Type: ~~Backhoe~~ Track Hole

Equipment Supplier: CAT

I.D. #: 120 B

Date: 11/18/94

BRAKES	✓	COOLING WATER	✓
AIR SYSTEM	N/A	OPERATING CONTROLS	✓
TIRES/TRACKS	✓	LIGHTS/REFLECTORS	✓
HORN	✓	WINDSHIELD WIPERS	✓
SAFETY DEVICES	✓	FIRE EXTINGUISHER	✓
GLASS	✓	BACKUP ALARM	✓
MIRRORS	✓	ENGINE OIL ✓	Add/Check
DEFROSTER	✓	EXHAUST SYSTEM	✓
STEERING SYSTEM	✓	FLUID LEVELS	✓
WIRE ROPE	N/A	MAINTAINENCE MANUALS	✓
APPEARANCE	✓	OPERATING MANUALS	✓
ELECTRICAL SYSTEM	✓	LOAD CHARTS	
INSPECTOR:	Ed [illegible]	DATE:	11-18-94
APPROVED: (HEALTH &SAFETY)		DATE:	
PHOTOGRAPHS TAKEN			

IT CORPORATION

PROJECT

EQUIPMENT INSPECTION LOG

Equipment Type: 966

Equipment Supplier: S.S.S

I.D. #: 966 F

Date: 11-18-94

BRAKES	✓	COOLING WATER	✓
AIR SYSTEM	✓	OPERATING CONTROLS	✓
TIRES/TRACKS	✓	LIGHTS/REFLECTORS	✓
HORN	✓	WINDSHIELD WIPERS	✓
SAFETY DEVICES	✓	FIRE EXTINGUISHER	✓
GLASS	✓	BACKUP ALARM	✓
MIRRORS	✓	ENGINE OIL ✓	Add/Check ✓
DEFROSTER	✓	EXHAUST SYSTEM	✓
STEERING SYSTEM	✓	FLUID LEVELS	✓
WIRE ROPE	NA	MAINTAINENCE MANUALS	✓
APPEARANCE	—	OPERATING MANUALS	✓
ELECTRICAL SYSTEM	✓	LOAD CHARTS	✓
INSPECTOR:	J Moore	DATE:	11-18-94
APPROVED: (HEALTH &SAFETY)		DATE:	
PHOTOGRAPHS TAKEN			

IT CORPORATION

PROJECT

EQUIPMENT INSPECTION LOG

Equipment Type: 966 F

Equipment Supplier: S.S.S

I.D. #: 966 F

Date: 11-19-94

BRAKES		COOLING WATER	
AIR SYSTEM	✓	OPERATING CONTROLS	✓
TIRES/TRACKS	✓	LIGHTS/REFLECTORS	✓
HORN	✓	WINDSHIELD WIPERS	✓
SAFETY DEVICES	✓	FIRE EXTINGUISHER	✓
GLASS	✓	BACKUP ALARM	
MIRRORS	✓	ENGINE OIL	✓ Add/Check
DEFROSTER	✓	EXHAUST SYSTEM	✓
STEERING SYSTEM	✓	FLUID LEVELS	✓
WIRE ROPE	N/A	MAINTAINENCE MANUALS	✓
APPEARANCE	✓	OPERATING MANUALS	✓
ELECTRICAL SYSTEM	✓	LOAD CHARTS	✓
INSPECTOR:	J. Moore	DATE:	11-19-94
APPROVED: (HEALTH &SAFETY)		DATE:	
PHOTOGRAPHS TAKEN			

IT CORPORATION

PROJECT

EQUIPMENT INSPECTION LOG

Equipment Type: 120 BH

Equipment Supplier: CAT

I.D. #: 120B

Date: 11-19-94

BRAKES	✓	COOLING WATER	✓
AIR SYSTEM	✓	OPERATING CONTROLS	✓
TIRES/TRACKS	✓	LIGHTS/REFLECTORS	✓
HORN	✓	WINDSHIELD WIPERS	✓
SAFETY DEVICES	✓	FIRE EXTINGUISHER	✓
GLASS	✓	BACKUP ALARM	✓
MIRRORS	✓	ENGINE OIL	Add/~~Check~~
DEFROSTER	✓	EXHAUST SYSTEM	✓
STEERING SYSTEM	✓	FLUID LEVELS	✓
WIRE ROPE	NA	MAINTAINENCE MANUALS	✓
APPEARANCE	✓	OPERATING MANUALS	✓
ELECTRICAL SYSTEM	✓	LOAD CHARTS	
INSPECTOR:	[illegible]	DATE:	11-19-94
APPROVED: (HEALTH &SAFETY)		DATE:	
PHOTOGRAPHS TAKEN			

IT CORPORATION

PROJECT

EQUIPMENT INSPECTION LOG

Equipment Type: Loader

Equipment Supplier: CAT

I.D. #: IT181

Date: 11/19/94

BRAKES	✓	COOLING WATER	✓
AIR SYSTEM	✓	OPERATING CONTROLS	✓
TIRES/TRACKS	✓	LIGHTS/REFLECTORS	✓
HORN	✓	WINDSHIELD WIPERS	✓
SAFETY DEVICES	✓	FIRE EXTINGUISHER	✓
GLASS	✓	BACKUP ALARM	✓
MIRRORS	✓	ENGINE OIL ✓	~~Add~~/Check 1 qt
DEFROSTER	✓	EXHAUST SYSTEM	✓
STEERING SYSTEM	✓	FLUID LEVELS	✓
WIRE ROPE	N/A ✓	MAINTAINENCE MANUALS	✓
APPEARANCE	✓	OPERATING MANUALS	✓
ELECTRICAL SYSTEM	✓	LOAD CHARTS	✓
INSPECTOR: Ronny Copeland		DATE: 11/19/94	
APPROVED: _____ (HEALTH &SAFETY)		DATE: _____	
PHOTOGRAPHS TAKEN			

IT CORPORATION

PROJECT

EQUIPMENT INSPECTION LOG

Equipment Type: D3 Dozer

Equipment Supplier: CAT

I.D. #: ~~DF~~ D3

Date: 11/19/94

BRAKES	✓	COOLING WATER	✓
AIR SYSTEM	N/A	OPERATING CONTROLS	✓
TIRES/TRACXS	✓	LIGHTS/REFLECTORS	✓
HORN	✓	WINDSHIELD WIPERS	N/A
SAFETY DEVICES	✓	FIRE EXTINGUISHER	✓
GLASS	N/A	BACXUP ALARM	✓
MIRRORS	✓	ENGINE OIL	✓ Add/~~check~~
DEFROSTER	N/A	EXHAUST SYSTEM	✓
STEERING SYSTEM	✓	FLUID LEVELS	✓
WIRE ROPE	N/A	MAINTAINENCE MANUALS	✓
APPEARANCE	✓	OPERATING MANUALS	✓
ELECTRICAL SYSTEM	✓	LOAD CHARTS	✓
INSPECTOR:	Ronny Copeland	DATE:	11/19/94
APPROVED:	_____ (HEALTH &SAFETY)	DATE:	_____
PHOTOGRAPHS TAKEN			

IT CORPORATION

PROJECT

EQUIPMENT INSPECTION LOG

Equipment Type: Dozer

Equipment Supplier: Cat

I.D. #: D-3

Date: 11/20/94

BRAKES	✓	COOLING WATER	✓
AIR SYSTEM	N/A	OPERATING CONTROLS	✓
TIRES/TRACKS	✓	LIGHTS/REFLECTORS	✓
HORN	✓	WINDSHIELD WIPERS	N/A
SAFETY DEVICES	✓	FIRE EXTINGUISHER	✓
GLASS	N/A	BACKUP ALARM	✓
MIRRORS	✓	ENGINE OIL ✓	Add/Check
DEFROSTER	N/A	EXHAUST SYSTEM	✓
STEERING SYSTEM	✓	FLUID LEVELS	✓
WIRE ROPE	N/A	MAINTAINENCE MANUALS	✓
APPEARANCE	✓	OPERATING MANUALS	✓
ELECTRICAL SYSTEM	✓	LOAD CHARTS	✓
INSPECTOR: Ronny Copeland		DATE: 11/20/94	
APPROVED: _____ (HEALTH &SAFETY)		DATE: _____	
PHOTOGRAPHS TAKEN			

IT CORPORATION

PROJECT

EQUIPMENT INSPECTION LOG

Equipment Type: Loader 966F

Equipment Supplier: S.S.S.

I.D. #: 966 F

Date: 10-20-94

BRAKES		COOLING WATER	✓
AIR SYSTEM	—	OPERATING CONTROLS	✓
TIRES/TRACKS	✓	LIGHTS/REFLECTORS	✓
HORN	✓	WINDSHIELD WIPERS	✓
SAFETY DEVICES	✓	FIRE EXTINGUISHER	✓
GLASS	✓	BACKUP ALARM	✓
MIRRORS	✓	ENGINE OIL ✓	Add/Check
DEFROSTER	✓	EXHAUST SYSTEM	✓
STEERING SYSTEM	✓	FLUID LEVELS	✓
WIRE ROPE	NA	MAINTAINENCE MANUALS	✓
APPEARANCE	—	OPERATING MANUALS	✓
ELECTRICAL SYSTEM	✓	LOAD CHARTS	✓
INSPECTOR:	J Moore	DATE:	10-20-94
APPROVED:	(HEALTH &SAFETY)	DATE:	
PHOTOGRAPHS TAKEN			

IT CORPORATION

PROJECT

EQUIPMENT INSPECTION LOG

Equipment Type: 120 BH

Equipment Supplier: Syracuse Supply

I.D. #:

Date: 11-20-94

BRAKES	✓	COOLING WATER	✓
AIR SYSTEM	✓	OPERATING CONTROLS	✓
TIRES/TRACKS	✓	LIGHTS/REFLECTORS	✓
HORN	✓	WINDSHIELD WIPERS	✓
SAFETY DEVICES	✓	FIRE EXTINGUISHER	—
GLASS	✓	BACKUP ALARM	—
MIRRORS	✓	ENGINE OIL	Add/Check
DEFROSTER	✓	EXHAUST SYSTEM	✓
STEERING SYSTEM	✓	FLUID LEVELS	✓
WIRE ROPE	NA	MAINTAINENCE MANUALS	✓
APPEARANCE	✓	OPERATING MANUALS	✓
ELECTRICAL SYSTEM	✓	LOAD CHARTS	✓
INSPECTOR:	[illegible]	DATE:	11-20-94
APPROVED: (HEALTH &SAFETY)		DATE:	
PHOTOGRAPHS TAKEN			

IT CORPORATION

PROJECT

EQUIPMENT INSPECTION LOG

Equipment Type: LOADER

Equipment Supplier: S. S. S.

I.D. #: 28

Date: 11-20-94

BRAKES	✓	COOLING WATER	✓
AIR SYSTEM	✓	OPERATING CONTROLS	✓
TIRES/TRACKS	✓	LIGHTS/REFLECTORS	✓
HORN	✓	WINDSHIELD WIPERS	✓
SAFETY DEVICES	✓	FIRE EXTINGUISHER	✓
GLASS	✓	BACKUP ALARM	✓
MIRRORS	✓	ENGINE OIL O.K	Add/Check
DEFROSTER	✓	EXHAUST SYSTEM	✓
STEERING SYSTEM	✓	FLUID LEVELS	✓
WIRE ROPE	N/A	MAINTAINENCE MANUALS	✓
APPEARANCE	✓	OPERATING MANUALS	✓
ELECTRICAL SYSTEM	✓	LOAD CHARTS	✓
INSPECTOR: [signature]		DATE: 11-20-94	
APPROVED: (HEALTH &SAFETY)		DATE:	
PHOTOGRAPHS TAKEN			

IT CORPORATION

PROJECT

EQUIPMENT INSPECTION LOG

Equipment Type: Loader

Equipment Supplier: Cat

I.D. #: IT 181

Date: 11/20/94

BRAKES	✓	COOLING WATER	✓
AIR SYSTEM	✓	OPERATING CONTROLS	✓
TIRES/TRACKS	✓	LIGHTS/REFLECTORS	✓
HORN	✓	WINDSHIELD WIPERS	✓
SAFETY DEVICES	✓	FIRE EXTINGUISHER	✓
GLASS	✓	BACKUP ALARM	✓
MIRRORS	✓	ENGINE OIL	✓ Add/Check
DEFROSTER	✓	EXHAUST SYSTEM	✓
STEERING SYSTEM	✓	FLUID LEVELS	✓
WIRE ROPE	N/A	MAINTAINENCE MANUALS	✓
APPEARANCE	✓	OPERATING MANUALS	✓
ELECTRICAL SYSTEM	✓	LOAD CHARTS	✓
INSPECTOR:		DATE:	
APPROVED: Penny Copeland (HEALTH &SAFETY)		DATE: 11/20/94	
PHOTOGRAPHS TAKEN			

IT CORPORATION

PROJECT

EQUIPMENT INSPECTION LOG

Equipment Type: IT 28

Equipment Supplier: SSC

I.D. #:

Date: 11-20-94

HRS. 213

BRAKES	OK	COOLING WATER	OK
AIR SYSTEM	OK	OPERATING CONTROLS	OK
TIRES/TRACKS	OK	LIGHTS/REFLECTORS	OK
HORN	OK	WINDSHIELD WIPERS	OK
SAFETY DEVICES	OK	FIRE EXTINGUISHER	OK
GLASS	OK	BACKUP ALARM	OK
MIRRORS	OK	ENGINE OIL	Add/Check OK
DEFROSTER	OK	EXHAUST SYSTEM	OK
STEERING SYSTEM	OK	FLUID LEVELS	fuel 1/2 tank
WIRE ROPE		MAINTAINENCE MANUALS	
APPEARANCE	OK	OPERATING MANUALS	
ELECTRICAL SYSTEM	OK	LOAD CHARTS	
INSPECTOR:	Freddi Porters (Fer-Tech)	DATE:	
APPROVED:	(HEALTH &SAFETY)	DATE:	
PHOTOGRAPHS TAKEN			

IT CORPORATION

PROJECT

EQUIPMENT INSPECTION LOG

Equipment Type: Front End Loader (Fen-Tech Loader)

Equipment Supplier:

I.D. #: FT 28B

Date: 11-21-94

BRAKES	✓	COOLING WATER	✓
AIR SYSTEM	✓	OPERATING CONTROLS	✓
TIRES/TRACKS	✓	LIGHTS/REFLECTORS	Right Hdl Light Out
HORN	✓	WINDSHIELD WIPERS	✓
SAFETY DEVICES	✓	FIRE EXTINGUISHER	✓
GLASS	✓	BACKUP ALARM	✓
MIRRORS	✓	ENGINE OIL OK	Add/Check
DEFROSTER	✓	EXHAUST SYSTEM	✓
STEERING SYSTEM	✓	FLUID LEVELS	✓
WIRE ROPE		MAINTAINENCE MANUALS	✓
APPEARANCE	✓	OPERATING MANUALS	✓
ELECTRICAL SYSTEM	✓	LOAD CHARTS	✓
INSPECTOR:		DATE: 11-21-94	
APPROVED: (HEALTH &SAFETY)		DATE:	
PHOTOGRAPHS TAKEN	No		

IT CORPORATION

PROJECT

EQUIPMENT INSPECTION LOG

Equipment Type: LOADER

Equipment Supplier: S.S.S.

I.D. #: 18

Date: 11-21-94

BRAKES	✓	COOLING WATER	✓
AIR SYSTEM	✓	OPERATING CONTROLS	✓
TIRES/TRACKS	✓	LIGHTS/REFLECTORS	✓
HORN	✓	WINDSHIELD WIPERS	✓
SAFETY DEVICES	✓	FIRE EXTINGUISHER	✓
GLASS	✓	BACKUP ALARM	✓
MIRRORS	✓	ENGINE OIL GOOD	Add/Check
DEFROSTER	✓	EXHAUST SYSTEM	✓
STEERING SYSTEM	✓	FLUID LEVELS	✓
WIRE ROPE	NA	MAINTAINENCE MANUALS	✓
APPEARANCE	✓	OPERATING MANUALS	✓
ELECTRICAL SYSTEM	✓	LOAD CHARTS	✓
INSPECTOR:	[signature]	DATE:	11-21-94
APPROVED: (HEALTH &SAFETY)		DATE:	
PHOTOGRAPHS TAKEN			

IT CORPORATION

PROJECT

EQUIPMENT INSPECTION LOG

Equipment Type: Loader

Equipment Supplier: S.S.S

I.D. #: IT28F

Date: 11/21/94

BRAKES	—	COOLING WATER	—
AIR SYSTEM	—	OPERATING CONTROLS	—
TIRES/TRACKS	—	LIGHTS/REFLECTORS	—
HORN	—	WINDSHIELD WIPERS	—
SAFETY DEVICES	—	FIRE EXTINGUISHER	—
GLASS	—	BACKUP ALARM	—
MIRRORS	—	ENGINE OIL	— Add/Check
DEFROSTER	—	EXHAUST SYSTEM	—
STEERING SYSTEM	—	FLUID LEVELS	—
WIRE ROPE	N/A	MAINTAINENCE MANUALS	—
APPEARANCE	—	OPERATING MANUALS	—
ELECTRICAL SYSTEM	—	LOAD CHARTS	—
INSPECTOR:	Perry Copeland	DATE:	11/21/94
APPROVED: (HEALTH &SAFETY)		DATE:	
PHOTOGRAPHS TAKEN			

IT CORPORATION

PROJECT

EQUIPMENT INSPECTION LOG

Equipment Type: Loader

Equipment Supplier: S.S.S.

I.D. #: 966 F

Date: 11/21/94

Hours 354.7

BRAKES	✓	COOLING WATER	✓
AIR SYSTEM	✓	OPERATING CONTROLS	✓
TIRES/TRACKS	✓	LIGHTS/REFLECTORS	
HORN	✓	WINDSHIELD WIPERS	✓
SAFETY DEVICES	✓	FIRE EXTINGUISHER	✓
GLASS	✓	BACKUP ALARM	✓
MIRRORS	✓	ENGINE OIL	✓ Add/Check
DEFROSTER	✓	EXHAUST SYSTEM	✓
STEERING SYSTEM	✓	FLUID LEVELS	✓ F: ½ Tank Diesel
WIRE ROPE	N/A	MAINTAINENCE MANUALS	✓
APPEARANCE	✓	OPERATING MANUALS	✓
ELECTRICAL SYSTEM	✓	LOAD CHARTS	
INSPECTOR:	Harrel Bell Fer-Tech	DATE:	11/29/94
APPROVED: (HEALTH &SAFETY)		DATE:	
PHOTOGRAPHS TAKEN			

IT CORPORATION

PROJECT

EQUIPMENT INSPECTION LOG

Equipment Type: 966 F

Equipment Supplier: S.S.S

I.D. #: 966 F

Date: 11-22-94

BRAKES	✓	COOLING WATER	✓
AIR SYSTEM	✓	OPERATING CONTROLS	✓
TIRES/TRACXS	✓	LIGHTS/REFLECTORS	✓
HORN	✓	WINDSHIELD WIPERS	✓
SAFETY DEVICES	✓	FIRE EXTINGUISHER	✓
GLASS	✓	BACKUP ALARM	✓
MIRRORS	✓	ENGINE OIL	✓ Add/Check
DEFROSTER	✓	EXHAUST SYSTEM	✓
STEERING SYSTEM	✓	FLUID LEVELS	✓
WIRE ROPE	N/A	MAINTAINENCE MANUALS	✓
APPEARANCE	✓	OPERATING MANUALS	✓
ELECTRICAL SYSTEM	✓	LOAD CHARTS	✓
INSPECTOR:	J Moore	DATE:	11/22/94
APPROVED: (HEALTH &SAFETY)	Jy MSy	DATE:	11/28/94
PHOTOGRAPHS TAKEN			

IT CORPORATION

PROJECT

EQUIPMENT INSPECTION LOG

Equipment Type: FRONT END LOADER

Equipment Supplier: S.S.S.

I.D. #: 18

Date: 11-22-94

BRAKES	✓	COOLING WATER	✓
AIR SYSTEM	✓	OPERATING CONTROLS	✓
TIRES/TRACKS	✓	LIGHTS/REFLECTORS	✓
HORN	✓	WINDSHIELD WIPERS	✓
SAFETY DEVICES	✓	FIRE EXTINGUISHER	✓
GLASS	✓	BACKUP ALARM	✓
MIRRORS	✓	ENGINE OIL	ok Add/Check
DEFROSTER	✓	EXHAUST SYSTEM	✓
STEERING SYSTEM	✓	FLUID LEVELS	✓
WIRE ROPE	n/a	MAINTAINENCE MANUALS	✓
APPEARANCE	✓	OPERATING MANUALS	✓
ELECTRICAL SYSTEM	✓	LOAD CHARTS	✓
INSPECTOR:	[signature]	DATE:	11-22-94
APPROVED:	[signature] (HEALTH &SAFETY)	DATE:	11/28/94
PHOTOGRAPHS TAKEN			

IT CORPORATION

PROJECT

EQUIPMENT INSPECTION LOG

Equipment Type: 120 BH

Equipment Supplier: SyRACAuse Supply

I.D. #:

Date: 1-22-94

BRAKES	✓	COOLING WATER	✓
AIR SYSTEM	✓	OPERATING CONTROLS	✓
TIRES/TRACXS	✓	LIGHTS/REFLECTORS	✓
HORN	✓	WINDSHIELD WIPERS	✓
SAFETY DEVICES	✓	FIRE EXTINGUISHER	✓
GLASS	✓	BACXUP ALARM	✓
MIRRORS	✓	ENGINE OIL	Add/Check
DEFROSTER	✓	EXHAUST SYSTEM	✓
STEERING SYSTEM	✓	FLUID LEVELS	✓
WIRE ROPE	N/A	MAINTAINENCE MANUALS	✓
APPEARANCE	✓	OPERATING MANUALS	✓
ELECTRICAL SYSTEM	✓	LOAD CHARTS	✓
INSPECTOR: Ed [illegible]		DATE: 11-22-94	
APPROVED: Guy McEly (HEALTH &SAFETY)		DATE: 11/28/94	
PHOTOGRAPHS TAKEN			

IT CORPORATION

PROJECT

EQUIPMENT INSPECTION LOG

Equipment Type: 120 BH

Equipment Supplier: S.S.

I.D. #:

Date: 11-23-94

BRAKES	✓	COOLING WATER	✓
AIR SYSTEM	✓	OPERATING CONTROLS	✓
TIRES/TRACKS	✓	LIGHTS/REFLECTORS	✓
HORN	✓	WINDSHIELD WIPERS	✓
SAFETY DEVICES	✓	FIRE EXTINGUISHER	✓
GLASS	✓	BACKUP ALARM	✓
MIRRORS	✓	ENGINE OIL	Add/Check
DEFROSTER	✓	EXHAUST SYSTEM	✓
STEERING SYSTEM	✓	FLUID LEVELS	✓
WIRE ROPE	N/A	MAINTAINENCE MANUALS	✓
APPEARANCE	✓	OPERATING MANUALS	✓
ELECTRICAL SYSTEM	✓	LOAD CHARTS	✓
INSPECTOR:	[illegible]	DATE:	11-23-94
APPROVED: (HEALTH &SAFETY)	[illegible]	DATE:	11/28/94
PHOTOGRAPHS TAKEN			

IT CORPORATION

PROJECT

EQUIPMENT INSPECTION LOG

Equipment Type: 966 F LOADER

Equipment Supplier: S.S.S.

I.D. #: 966F

Date: 11-23-94

BRAKES	✓	COOLING WATER	✓
AIR SYSTEM	✓	OPERATING CONTROLS	✓
TIRES/TRACKS	✓	LIGHTS/REFLECTORS	✓
HORN	✓	WINDSHIELD WIPERS	✓
SAFETY DEVICES	✓	FIRE EXTINGUISHER	✓
GLASS	✓	BACKUP ALARM	
MIRRORS	✓	ENGINE OIL ✓	Add/Check
DEFROSTER	✓	EXHAUST SYSTEM	✓
STEERING SYSTEM	✓	FLUID LEVELS	✓
WIRE ROPE	✓ NA	MAINTAINENCE MANUALS	✓
APPEARANCE	✓	OPERATING MANUALS	✓
ELECTRICAL SYSTEM	✓	LOAD CHARTS	✓
INSPECTOR:	J Moore	DATE:	11-23-94
APPROVED:	Jay McGy (HEALTH &SAFETY)	DATE:	11/28/94
PHOTOGRAPHS TAKEN			

IT CORPORATION

PROJECT

EQUIPMENT INSPECTION LOG

Equipment Type: D3 Dozer

Equipment Supplier: SS

I.D. #:

Date: 11-23-94

BRAKES	✓	COOLING WATER	✓
AIR SYSTEM	✓	OPERATING CONTROLS	✓
TIRES/TRACKS	✓	LIGHTS/REFLECTORS	✓
HORN	✓	WINDSHIELD WIPERS	✓
SAFETY DEVICES	✓	FIRE EXTINGUISHER	✓
GLASS	✓	BACKUP ALARM	✓
MIRRORS	✓	ENGINE OIL	Add/Check
DEFROSTER	✓	EXHAUST SYSTEM	✓
STEERING SYSTEM	✓	FLUID LEVELS	✓
WIRE ROPE	NA	MAINTAINENCE MANUALS	✓
APPEARANCE	✓	OPERATING MANUALS	✓
ELECTRICAL SYSTEM	✓	LOAD CHARTS	
INSPECTOR: Ed Z O		DATE: 11-23-94	
APPROVED: Guy McEly (HEALTH &SAFETY)		DATE: 11/28/94	
PHOTOGRAPHS TAKEN			

IT CORPORATION

PROJECT

EQUIPMENT INSPECTION LOG

Equipment Type: IT 28

Equipment Supplier: SS

I.D. #:

Date: 11-24-94

BRAKES	✓	COOLING WATER	✓
AIR SYSTEM	✓	OPERATING CONTROLS	✓
TIRES/TRACKS	✓	LIGHTS/REFLECTORS	✓
HORN	✓	WINDSHIELD WIPERS	✓
SAFETY DEVICES	✓	FIRE EXTINGUISHER	✓
GLASS	✓	BACKUP ALARM	✓
MIRRORS	✓	ENGINE OIL	✓ Add/Check
DEFROSTER	✓	EXHAUST SYSTEM	✓
STEERING SYSTEM	✓	FLUID LEVELS	✓
WIRE ROPE	NA	MAINTAINENCE MANUALS	✓
APPEARANCE	✓	OPERATING MANUALS	✓
ELECTRICAL SYSTEM	✓	LOAD CHARTS	✓
INSPECTOR:	Ed X.	DATE:	11-24-94
APPROVED:	Gy McEly (HEALTH &SAFETY)	DATE:	11/28/94
PHOTOGRAPHS TAKEN			

IT CORPORATION

PROJECT

EQUIPMENT INSPECTION LOG

Equipment Type: 966

Equipment Supplier: SS

I.D. #:

Date: 11-24-94

BRAKES	✓	COOLING WATER	✓
AIR SYSTEM	✓	OPERATING CONTROLS	✓
TIRES/TRACXS	✓	LIGHTS/REFLECTORS	✓
HORN	✓	WINDSHIELD WIPERS	✓
SAFETY DEVICES	✓	FIRE EXTINGUISHER	✓
GLASS	✓	BACKUP ALARM	✓
MIRRORS	✓	ENGINE OIL ✓	Add/Check
DEFROSTER	✓	EXHAUST SYSTEM	✓
STEERING SYSTEM	✓	FLUID LEVELS	✓
WIRE ROPE	N/A	MAINTAINENCE MANUALS	✓
APPEARANCE	✓	OPERATING MANUALS	✓
ELECTRICAL SYSTEM	✓	LOAD CHARTS	✓
INSPECTOR: Ed Z		DATE: 11-24-94	
APPROVED: Jay McEly (HEALTH &SAFETY)		DATE: 11/28/94	
PHOTOGRAPHS TAKEN			

IT CORPORATION

PROJECT

EQUIPMENT INSPECTION LOG

Equipment Type: 120 B1+

Equipment Supplier: SS

I.D. #:

Date: 11-24-94

BRAKES	✓	COOLING WATER	✓
AIR SYSTEM	✓	OPERATING CONTROLS	✓
TIRES/TRACKS	✓	LIGHTS/REFLECTORS	✓
HORN	✓	WINDSHIELD WIPERS	✓
SAFETY DEVICES	✓	FIRE EXTINGUISHER	✓
GLASS	✓	BACKUP ALARM	✓
MIRRORS	✓	ENGINE OIL ✓	Add/Check
DEFROSTER	✓	EXHAUST SYSTEM	✓
STEERING SYSTEM	✓	FLUID LEVELS	✓
WIRE ROPE	NA	MAINTAINENCE MANUALS	✓
APPEARANCE	✓	OPERATING MANUALS	✓
ELECTRICAL SYSTEM	✓	LOAD CHARTS	✓
INSPECTOR:	[illegible]	DATE:	11-24-94
APPROVED:	[illegible] (HEALTH &SAFETY)	DATE:	11/28/94
PHOTOGRAPHS TAKEN			

IT CORPORATION

PROJECT

EQUIPMENT INSPECTION LOG

Equipment Type: 966

Equipment Supplier: S.S.

I.D. #:

Date: 11-26-94

BRAKES	✓	COOLING WATER	✓
AIR SYSTEM	✓	OPERATING CONTROLS	✓
TIRES/TRACKS	✓	LIGHTS/REFLECTORS	✓
HORN	✓	WINDSHIELD WIPERS	✓
SAFETY DEVICES	✓	FIRE EXTINGUISHER	✓
GLASS	✓	BACKUP ALARM	✓
MIRRORS	✓	ENGINE OIL	✓ Add/Check
DEFROSTER	✓	EXHAUST SYSTEM	✓
STEERING SYSTEM	✓	FLUID LEVELS	✓
WIRE ROPE	NA	MAINTAINENCE MANUALS	✓
APPEARANCE	✓	OPERATING MANUALS	✓
ELECTRICAL SYSTEM	✓	LOAD CHARTS	✓
INSPECTOR:	Ed	DATE:	11-26-94
APPROVED: (HEALTH &SAFETY)	Hy McEly	DATE:	11/30/94
PHOTOGRAPHS TAKEN			

IT CORPORATION

PROJECT

EQUIPMENT INSPECTION LOG

Equipment Type: 120 B H

Equipment Supplier: S.S.

I.D. #:

Date: 11-26-94

BRAKES	✓	COOLING WATER	✓
AIR SYSTEM	N/A	OPERATING CONTROLS	✓
TIRES/TRACKS	✓	LIGHTS/REFLECTORS	✓
HORN	✓	WINDSHIELD WIPERS	✓
SAFETY DEVICES	✓	FIRE EXTINGUISHER	✓
GLASS	✓	BACKUP ALARM	✓
MIRRORS	✓	ENGINE OIL	Add/Check
DEFROSTER	✓	EXHAUST SYSTEM	✓
STEERING SYSTEM	✓	FLUID LEVELS	✓
WIRE ROPE	N/A	MAINTAINENCE MANUALS	✓
APPEARANCE	✓	OPERATING MANUALS	✓
ELECTRICAL SYSTEM	✓	LOAD CHARTS	✓
INSPECTOR:	[illegible]	DATE:	11-26-94
APPROVED: (HEALTH & SAFETY)	[illegible]	DATE:	11/30/94
PHOTOGRAPHS TAKEN			

IT CORPORATION

PROJECT

EQUIPMENT INSPECTION LOG

Equipment Type: D-3 Dozer

Equipment Supplier: S.S.

I.D. #: CAT D-3

Date: 11/28/94

BRAKES	✓	COOLING WATER	✓
AIR SYSTEM	N/A	OPERATING CONTROLS	✓
TIRES/TRACKS	✓	LIGHTS/REFLECTORS	✓
HORN	✓	WINDSHIELD WIPERS	N/A
SAFETY DEVICES	✓	FIRE EXTINGUISHER	✓
GLASS	N/A	BACKUP ALARM	✓
MIRRORS	✓	ENGINE OIL	✓ Add/Check 1qt
DEFROSTER	N/A	EXHAUST SYSTEM	✓
STEERING SYSTEM	✓	FLUID LEVELS	✓
WIRE ROPE	N/A	MAINTAINENCE MANUALS	✓
APPEARANCE	✓	OPERATING MANUALS	✓
ELECTRICAL SYSTEM	✓	LOAD CHARTS	✓
INSPECTOR:	Percy Copeland	DATE:	11/28/94
APPROVED:	Guy McElg (HEALTH &SAFETY)	DATE:	11/30/94
PHOTOGRAPHS TAKEN			

IT CORPORATION

PROJECT

EQUIPMENT INSPECTION LOG

Equipment Type: D-3 Dozer

Equipment Supplier: S.S

I.D. #: CAT D-3

Date: 11/29/94

BRAKES	✓	COOLING WATER	✓
AIR SYSTEM	N/A	OPERATING CONTROLS	✓
TIRES/TRACKS	✓	LIGHTS/REFLECTORS	✓
HORN	✓	WINDSHIELD WIPERS	N/A
SAFETY DEVICES	✓	FIRE EXTINGUISHER	✓
GLASS	N/A	BACKUP ALARM	✓
MIRRORS	✓	ENGINE OIL	✓ Add/Check
DEFROSTER	N/A	EXHAUST SYSTEM	✓
STEERING SYSTEM	✓	FLUID LEVELS	✓
WIRE ROPE	N/A	MAINTAINENCE MANUALS	✓
APPEARANCE	✓	OPERATING MANUALS	✓
ELECTRICAL SYSTEM	✓	LOAD CHARTS	✓
INSPECTOR: Penny Copeland		DATE: 11/29/94	
APPROVED: Jay McElg (HEALTH &SAFETY)		DATE: 11/30/94	
PHOTOGRAPHS TAKEN			

IT CORPORATION

PROJECT

EQUIPMENT INSPECTION LOG

Equipment Type: loader

Equipment Supplier: SS

I.D. #: CAT 966F

Date: 11/29/94

BRAKES	✓	COOLING WATER	✓
AIR SYSTEM	✓	OPERATING CONTROLS	✓
TIRES/TRACKS	✓	LIGHTS/REFLECTORS	✓
HORN	✓	WINDSHIELD WIPERS	✓
SAFETY DEVICES	✓	FIRE EXTINGUISHER	✓
GLASS	✓	BACKUP ALARM	✓
MIRRORS	✓	ENGINE OIL	✓ Add/Check
DEFROSTER	✓	EXHAUST SYSTEM	✓
STEERING SYSTEM	✓	FLUID LEVELS	✓
WIRE ROPE	N/A	MAINTAINENCE MANUALS	✓
APPEARANCE	✓	OPERATING MANUALS	✓
ELECTRICAL SYSTEM	✓	LOAD CHARTS	✓
INSPECTOR:	[illegible]	DATE:	11/29/94
APPROVED: (HEALTH &SAFETY)	Jay McElg	DATE:	11/30/94
PHOTOGRAPHS TAKEN			

IT CORPORATION

PROJECT

EQUIPMENT INSPECTION LOG

Equipment Type: Tracks Hoe

Equipment Supplier: SS

I.D. #: Cat 120B

Date: 11/29/94

BRAKES	✓	COOLING WATER	✓
AIR SYSTEM	N/A	OPERATING CONTROLS	✓
TIRES/TRACKS	✓	LIGHTS/REFLECTORS	✓
HORN	✓	WINDSHIELD WIPERS	✓
SAFETY DEVICES	✓	FIRE EXTINGUISHER	✓
GLASS	✓	BACKUP ALARM	✓
MIRRORS	✓	ENGINE OIL	✓ Add/Check
DEFROSTER	✓	EXHAUST SYSTEM	✓
STEERING SYSTEM	✓	FLUID LEVELS	✓
WIRE ROPE	N/A	MAINTAINENCE MANUALS	✓
APPEARANCE	✓	OPERATING MANUALS	✓
ELECTRICAL SYSTEM	✓	LOAD CHARTS	✓
INSPECTOR:	Percy Copeland	DATE:	11/29/94
APPROVED:	Ty McEly (HEALTH &SAFETY)	DATE:	11/30/94
PHOTOGRAPHS TAKEN			

IT CORPORATION

PROJECT

EQUIPMENT INSPECTION LOG

Equipment Type: D-3 - Dozer

Equipment Supplier: SS

I.D. #: CAT D-3

Date: 11/30/94

BRAKES	✓	COOLING WATER	✓
AIR SYSTEM	N/A	OPERATING CONTROLS	✓
TIRES/TRACKS	✓	LIGHTS/REFLECTORS	✓
HORN	✓	WINDSHIELD WIPERS	N/A
SAFETY DEVICES	✓	FIRE EXTINGUISHER	✓
GLASS	N/A	BACKUP ALARM	✓
MIRRORS	✓	ENGINE OIL	✓ Add/Check
DEFROSTER	N/A	EXHAUST SYSTEM	✓
STEERING SYSTEM	✓	FLUID LEVELS	✓
WIRE ROPE	N/A	MAINTAINENCE MANUALS	✓
APPEARANCE	✓	OPERATING MANUALS	✓
ELECTRICAL SYSTEM	✓	LOAD CHARTS	✓
INSPECTOR: [signature]		DATE: 11/30/94	
APPROVED: [signature] (HEALTH & SAFETY)		DATE: 12/1/94	
PHOTOGRAPHS TAKEN			

IT CORPORATION

PROJECT

EQUIPMENT INSPECTION LOG

Equipment Type: 120 BH

Equipment Supplier: S.S.

I.D. #:

Date: 11-30-94

BRAKES	✓	COOLING WATER	✓
AIR SYSTEM	✓	OPERATING CONTROLS	✓
TIRES/TRACKS	✓	LIGHTS/REFLECTORS	✓
HORN	✓	WINDSHIELD WIPERS	✓
SAFETY DEVICES	✓	FIRE EXTINGUISHER	✓
GLASS	✓	BACKUP ALARM	✓
MIRRORS	1 Good 1 Bad	ENGINE OIL	✓ Add/Check
DEFROSTER	✓	EXHAUST SYSTEM	✓
STEERING SYSTEM	✓	FLUID LEVELS	✓
WIRE ROPE	N/A	MAINTAINENCE MANUALS	✓
APPEARANCE	✓	OPERATING MANUALS	✓
ELECTRICAL SYSTEM	✓	LOAD CHARTS	✓
INSPECTOR:	EDTO	DATE:	11-30-94
APPROVED: (HEALTH & SAFETY)	[signature]	DATE:	12-6-94
PHOTOGRAPHS TAKEN			

IT CORPORATION

PROJECT

EQUIPMENT INSPECTION LOG

Equipment Type: Loader

Equipment Supplier: S S

I.D. #: CAT IT28F

Date: 11/30/94

Fer-Tech

BRAKES	OK	COOLING WATER	OK
AIR SYSTEM	NA	OPERATING CONTROLS	OK
TIRES/TRACKS	OK	LIGHTS/REFLECTORS	OK
HORN	OK	WINDSHIELD WIPERS	OK
SAFETY DEVICES	✓	FIRE EXTINGUISHER	✓
GLASS	OK	BACKUP ALARM	OK
MIRRORS	OK	ENGINE OIL	Add/Check OK
DEFROSTER		EXHAUST SYSTEM	
STEERING SYSTEM	OK	FLUID LEVELS	OK
WIRE ROPE	NA	MAINTAINENCE MANUALS	✓
APPEARANCE	acceptable	OPERATING MANUALS	✓
ELECTRICAL SYSTEM	OK	LOAD CHARTS	
INSPECTOR:	Bill Williams	DATE:	11-30-94
APPROVED: (HEALTH &SAFETY)		DATE:	
PHOTOGRAPHS TAKEN			

IT CORPORATION

PROJECT

EQUIPMENT INSPECTION LOG

Equipment Type: 120 BH

Equipment Supplier: Syracuse Supply

I.D. #:

Date: 12-1-94

BRAKES ✓	COOLING WATER ✓
AIR SYSTEM ✓	OPERATING CONTROLS ✓
TIRES/TRACKS ✓	LIGHTS/REFLECTORS ✓
HORN ✓	WINDSHIELD WIPERS ✓
SAFETY DEVICES ✓	FIRE EXTINGUISHER ✓
GLASS ✓	BACKUP ALARM ✓
MIRRORS 1 Good 1 Bad	ENGINE OIL 1 qt (Add/Check)
DEFROSTER ✓	EXHAUST SYSTEM ✓
STEERING SYSTEM ✓	FLUID LEVELS ✓
WIRE ROPE NA	MAINTAINENCE MANUALS ✓
APPEARANCE ✓	OPERATING MANUALS ✓
ELECTRICAL SYSTEM ✓	LOAD CHARTS ✓
INSPECTOR: [illegible]	DATE: 12-1-94
APPROVED: [signature] (HEALTH &SAFETY)	DATE: 12-6-94
PHOTOGRAPHS TAKEN	

IT CORPORATION

PROJECT

EQUIPMENT INSPECTION LOG

Equipment Type: D-3 - Dozer

Equipment Supplier: S.S.

I.D. #: CAT D-3

Date: 12/1/94

BRAKES	✓	COOLING WATER	✓
AIR SYSTEM	N/A	OPERATING CONTROLS	✓
TIRES/TRACKS	✓	LIGHTS/REFLECTORS	✓
HORN	✓	WINDSHIELD WIPERS	N/A
SAFETY DEVICES	✓	FIRE EXTINGUISHER	✓
GLASS	N/A	BACKUP ALARM	✓
MIRRORS	✓	ENGINE OIL	✓ Add/~~Check~~
DEFROSTER	N/A	EXHAUST SYSTEM	✓
STEERING SYSTEM	✓	FLUID LEVELS	✓
WIRE ROPE	N/A	MAINTAINENCE MANUALS	✓
APPEARANCE	✓	OPERATING MANUALS	✓
ELECTRICAL SYSTEM	✓	LOAD CHARTS	✓
INSPECTOR:	[signature]	DATE:	12/1/94
APPROVED:	[signature] (HEALTH &SAFETY)	DATE:	12/1/94
PHOTOGRAPHS TAKEN			

IT CORPORATION

PROJECT

EQUIPMENT INSPECTION LOG

Equipment Type: 966 F

Equipment Supplier: S.S.S

I.D. #: 966 F

Date: 12-1-94

BRAKES		COOLING WATER	✓
AIR SYSTEM	✓	OPERATING CONTROLS	✓
TIRES/TRACXS	✓	LIGHTS/REFLECTORS	✓
HORN	✓	WINDSHIELD WIPERS	✓
SAFETY DEVICES	✓	FIRE EXTINGUISHER	✓
GLASS	✓	BACKUP ALARM	✓
MIRRORS	✓	ENGINE OIL	✓ Add/Check 1 qt
DEFROSTER	✓	EXHAUST SYSTEM	✓
STEERING SYSTEM	✓	FLUID LEVELS	✓
WIRE ROPE	NA	MAINTAINENCE MANUALS	✓
APPEARANCE	OK	OPERATING MANUALS	✓
ELECTRICAL SYSTEM	✓	LOAD CHARTS	✓
INSPECTOR:	F Moore	DATE:	12-1-94
APPROVED: (HEALTH &SAFETY)		DATE:	
PHOTOGRAPHS TAKEN			

IT CORPORATION

PROJECT

EQUIPMENT INSPECTION LOG

Equipment Type: FRONT END LOADER

Equipment Supplier: S.S.S.

I.D. #: 18F

Date: 12-1-94

BRAKES	✓	COOLING WATER	✓
AIR SYSTEM	✓	OPERATING CONTROLS	✓
TIRES/TRACKS	✓	LIGHTS/REFLECTORS	✓
HORN	✓	WINDSHIELD WIPERS	✓
SAFETY DEVICES	✓	FIRE EXTINGUISHER	✓
GLASS	✓	BACKUP ALARM	✓
MIRRORS	✓	ENGINE OIL	Little low Add/Check
DEFROSTER	✓	EXHAUST SYSTEM	✓
STEERING SYSTEM	✓	FLUID LEVELS	✓
WIRE ROPE	N/A	MAINTAINENCE MANUALS	✓
APPEARANCE	OK	OPERATING MANUALS	✓
ELECTRICAL SYSTEM	✓	LOAD CHARTS	✓
INSPECTOR:	PETER D. CLOUD	DATE:	12-1-94
APPROVED: (HEALTH &SAFETY)		DATE:	
PHOTOGRAPHS TAKEN			

IT CORPORATION

PROJECT

EQUIPMENT INSPECTION LOG

Equipment Type: 120B

Equipment Supplier: S.S.

I.D. #: CAT 120B

Date: 12/3/94

BRAKES	✓	COOLING WATER	✓
AIR SYSTEM	N/A	OPERATING CONTROLS	✓
TIRES/TRACKS	✓	LIGHTS/REFLECTORS	✓
HORN	✓	WINDSHIELD WIPERS	✓
SAFETY DEVICES	✓	FIRE EXTINGUISHER	✓
GLASS	✓	BACKUP ALARM	✓
MIRRORS	✓	ENGINE OIL	✓ Add/Check
DEFROSTER	✓	EXHAUST SYSTEM	✓
STEERING SYSTEM	✓	FLUID LEVELS	✓
WIRE ROPE	N/A	MAINTAINENCE MANUALS	✓
APPEARANCE	✓	OPERATING MANUALS	✓
ELECTRICAL SYSTEM	✓	LOAD CHARTS	✓
INSPECTOR:	Perry Copeland	DATE:	12/3/94
APPROVED: (HEALTH &SAFETY)		DATE:	
PHOTOGRAPHS TAKEN			

IT CORPORATION

PROJECT

EQUIPMENT INSPECTION LOG

Equipment Type: Loader

Equipment Supplier: S.S.S.

I.D. #: 28

Date: 12-4-94

BRAKES	✓	COOLING WATER	✓
AIR SYSTEM	✓	OPERATING CONTROLS	✓
TIRES/TRACKS	✓	LIGHTS/REFLECTORS	✓
HORN	✓	WINDSHIELD WIPERS	✓
SAFETY DEVICES	✓	FIRE EXTINGUISHER	✓
GLASS	✓	BACKUP ALARM	✓
MIRRORS	✓	ENGINE OIL	OK Add/Check
DEFROSTER	✓	EXHAUST SYSTEM	✓
STEERING SYSTEM	✓	FLUID LEVELS	✓
WIRE ROPE	✓	MAINTAINENCE MANUALS	✓
APPEARANCE	✓	OPERATING MANUALS	✓
ELECTRICAL SYSTEM	✓	LOAD CHARTS	✓
INSPECTOR:		DATE:	12-4-94
APPROVED: (HEALTH & SAFETY)		DATE:	12-6-94
PHOTOGRAPHS TAKEN			

IT CORPORATION

PROJECT

EQUIPMENT INSPECTION LOG

Equipment Type: Loader

Equipment Supplier: S.S.S.

I.D. #: 18

Date: 12-4-94

BRAKES	✓	COOLING WATER	✓
AIR SYSTEM	✓	OPERATING CONTROLS	✓
TIRES/TRACKS	✓	LIGHTS/REFLECTORS	✓
HORN	✓	WINDSHIELD WIPERS	✓
SAFETY DEVICES	✓	FIRE EXTINGUISHER	✓
GLASS	✓	BACKUP ALARM	✓
MIRRORS	✓	ENGINE OIL	Add/Check
DEFROSTER	✓	EXHAUST SYSTEM	✓
STEERING SYSTEM	✓	FLUID LEVELS	✓
WIRE ROPE	N/A	MAINTAINENCE MANUALS	✓
APPEARANCE	✓	OPERATING MANUALS	✓
ELECTRICAL SYSTEM	✓	LOAD CHARTS	✓
INSPECTOR:	[signature]	DATE:	12-4-94
APPROVED: (HEALTH & SAFETY)	[signature]	DATE:	12-6-94
PHOTOGRAPHS TAKEN			

IT CORPORATION

PROJECT

EQUIPMENT INSPECTION LOG

Equipment Type: 966F

Equipment Supplier: S-S.S.

I.D. #: 966F

Date: 12-4-94

BRAKES	✓	COOLING WATER	✓
AIR SYSTEM	✓	OPERATING CONTROLS	✓
TIRES/TRACKS	✓	LIGHTS/REFLECTORS	✓
HORN	✓	WINDSHIELD WIPERS	✓
SAFETY DEVICES	✓	FIRE EXTINGUISHER	✓
GLASS	✓	BACKUP ALARM	✓
MIRRORS	✓	ENGINE OIL	✓ Add/Check
DEFROSTER	✓	EXHAUST SYSTEM	✓
STEERING SYSTEM	✓	FLUID LEVELS	✓
WIRE ROPE	N/A	MAINTAINENCE MANUALS	✓
APPEARANCE	✓	OPERATING MANUALS	✓
ELECTRICAL SYSTEM	✓	LOAD CHARTS	✓
INSPECTOR:	T. Moore	DATE:	12-4-94
APPROVED:	Jeff Wolightly (HEALTH & SAFETY)	DATE:	12-6-94
PHOTOGRAPHS TAKEN			

IT CORPORATION

PROJECT

EQUIPMENT INSPECTION LOG

Equipment Type: 120

Equipment Supplier: SS

I.D. #: CAT 120B

Date: 12/4/94

BRAKES	✓	COOLING WATER	✓
AIR SYSTEM	N/A	OPERATING CONTROLS	✓
TIRES/TRACKS	✓	LIGHTS/REFLECTORS	✓
HORN	✓	WINDSHIELD WIPERS	✓
SAFETY DEVICES	✓	FIRE EXTINGUISHER	✓
GLASS	✓	BACKUP ALARM	✓
MIRRORS	✓	ENGINE OIL	✓ Add/Check
DEFROSTER	✓	EXHAUST SYSTEM	✓
STEERING SYSTEM	✓	FLUID LEVELS	✓
WIRE ROPE	N/A	MAINTAINENCE MANUALS	✓
APPEARANCE	✓	OPERATING MANUALS	✓
ELECTRICAL SYSTEM	✓	LOAD CHARTS	✓
INSPECTOR: [signature]		DATE: ~~12/8~~ 12/4/94	
APPROVED: [signature] (HEALTH &SAFETY)		DATE: 12-6-94	
PHOTOGRAPHS TAKEN			

IT CORPORATION

PROJECT

EQUIPMENT INSPECTION LOG

Equipment Type: LOADER

Equipment Supplier: S.S.S.

I.D. #: 18

Date: 12-5-94

BRAKES	✓	COOLING WATER	✓
AIR SYSTEM	✓	OPERATING CONTROLS	✓
TIRES/TRACKS	✓	LIGHTS/REFLECTORS	✓
HORN	✓	WINDSHIELD WIPERS	✓
SAFETY DEVICES	✓	FIRE EXTINGUISHER	✓
GLASS	✓	BACKUP ALARM	✓
MIRRORS	✓	ENGINE OIL	Add/Check
DEFROSTER	✓	EXHAUST SYSTEM	✓
STEERING SYSTEM	✓	FLUID LEVELS	✓
WIRE ROPE	n/a	MAINTAINENCE MANUALS	✓
APPEARANCE	✓	OPERATING MANUALS	✓
ELECTRICAL SYSTEM	✓	LOAD CHARTS	
INSPECTOR:	[signature]	DATE:	12-5-94
APPROVED: (HEALTH & SAFETY)	Jeff Wolightly	DATE:	12-6-94
PHOTOGRAPHS TAKEN			

IT CORPORATION

PROJECT

EQUIPMENT INSPECTION LOG

Equipment Type: 966F

Equipment Supplier: S.S.S

I.D. #: 966 F

Date: 12-5-94

BRAKES	✓	COOLING WATER	✓
AIR SYSTEM	✓	OPERATING CONTROLS	✓
TIRES/TRACKS	✓	LIGHTS/REFLECTORS	✓
HORN	✓	WINDSHIELD WIPERS	✓
SAFETY DEVICES	✓	FIRE EXTINGUISHER	✓
GLASS	✓	BACKUP ALARM	✓
MIRRORS	✓	ENGINE OIL	✓ Add/Check
DEFROSTER	✓	EXHAUST SYSTEM	✓
STEERING SYSTEM	✓	FLUID LEVELS	✓
WIRE ROPE	NA	MAINTAINENCE MANUALS	✓
APPEARANCE	✓	OPERATING MANUALS	✓
ELECTRICAL SYSTEM	✓	LOAD CHARTS	✓
INSPECTOR:	F. Moore	DATE:	12-5-94
APPROVED:	Jeff Golightly (HEALTH & SAFETY)	DATE:	12-6-94
PHOTOGRAPHS TAKEN			

IT CORPORATION

PROJECT

EQUIPMENT INSPECTION LOG

Equipment Type: LOADER

Equipment Supplier: S.S.S.

I.D. #: 28

Date: 12-5-94

BRAKES	✓	COOLING WATER	✓
AIR SYSTEM	✓	OPERATING CONTROLS	✓
TIRES/TRACKS	✓	LIGHTS/REFLECTORS	✓
HORN	✓	WINDSHIELD WIPERS	✓
SAFETY DEVICES	✓	FIRE EXTINGUISHER	✓
GLASS	✓	BACKUP ALARM	✓
MIRRORS	✓	ENGINE OIL OK	Add/Check
DEFROSTER	✓	EXHAUST SYSTEM	✓
STEERING SYSTEM	✓	FLUID LEVELS	✓
WIRE ROPE	✓ N/A	MAINTAINENCE MANUALS	✓
APPEARANCE	✓	OPERATING MANUALS	✓
ELECTRICAL SYSTEM	✓	LOAD CHARTS	
INSPECTOR:		DATE: 12-5-94	
APPROVED: (HEALTH & SAFETY)		DATE: 12-6-94	
PHOTOGRAPHS TAKEN			

IT CORPORATION

PROJECT

EQUIPMENT INSPECTION LOG

Equipment Type: 120

Equipment Supplier: SS

I.D. #: CAT 120B

Date: 12/5/94

BRAKES	—	COOLING WATER	—
AIR SYSTEM	N/A	OPERATING CONTROLS	—
TIRES/TRACKS	—	LIGHTS/REFLECTORS	—
HORN	—	WINDSHIELD WIPERS	—
SAFETY DEVICES	—	FIRE EXTINGUISHER	—
GLASS	—	BACKUP ALARM	—
MIRRORS	—	ENGINE OIL	— Add/Check
DEFROSTER	—	EXHAUST SYSTEM	—
STEERING SYSTEM	—	FLUID LEVELS	—
WIRE ROPE	N/A	MAINTAINENCE MANUALS	—
APPEARANCE	—	OPERATING MANUALS	—
ELECTRICAL SYSTEM	—	LOAD CHARTS	—
INSPECTOR: [signature]		DATE: 12/5/94	
APPROVED: [signature] (HEALTH & SAFETY)		DATE: 12-6-94	
PHOTOGRAPHS TAKEN			

IT CORPORATION

PROJECT

EQUIPMENT INSPECTION LOG

Equipment Type: FRONT END LOADER

Equipment Supplier: S.S.S.

I.D. #: 28

Date: 12-6-94

BRAKES ✓	COOLING WATER ✓
AIR SYSTEM ✓	OPERATING CONTROLS ✓
TIRES/TRACKS ✓	LIGHTS/REFLECTORS ✓
HORN ✓	WINDSHIELD WIPERS ✓
SAFETY DEVICES ✓	FIRE EXTINGUISHER ✓
GLASS ✓	BACKUP ALARM ✓
MIRRORS ✓	ENGINE OIL OK Add/Check
DEFROSTER ✓	EXHAUST SYSTEM ✓
STEERING SYSTEM ✓	FLUID LEVELS ✓
WIRE ROPE N/A	MAINTAINENCE MANUALS ✓
APPEARANCE DIRTY	OPERATING MANUALS ✓
ELECTRICAL SYSTEM ✓	LOAD CHARTS
INSPECTOR: [signature]	DATE: 12-6-94
APPROVED: [signature] (HEALTH & SAFETY)	DATE: 12-10 '94
PHOTOGRAPHS TAKEN	

IT CORPORATION

PROJECT

EQUIPMENT INSPECTION LOG

Equipment Type: 120 BH

Equipment Supplier: Syracuse

I.D. #:

Date: 12-6-94

BRAKES	✓	COOLING WATER	✓
AIR SYSTEM	✓	OPERATING CONTROLS	✓
TIRES/TRACKS	ONE Track moves slow	LIGHTS/REFLECTORS	✓
HORN	✓	WINDSHIELD WIPERS	✓
SAFETY DEVICES	✓	FIRE EXTINGUISHER	✓
GLASS	✓	BACKUP ALARM	✓
MIRRORS	ONE good ONE Bad	ENGINE OIL	Add/Check
DEFROSTER	✓	EXHAUST SYSTEM	✓
STEERING SYSTEM	✓	FLUID LEVELS	Hy slow
WIRE ROPE	NA	MAINTAINENCE MANUALS	✓
APPEARANCE	✓	OPERATING MANUALS	✓
ELECTRICAL SYSTEM	✓	LOAD CHARTS	✓
INSPECTOR:	Ed Z	DATE:	12-6-94
APPROVED: (HEALTH &SAFETY)	[signature]	DATE:	12-10-94
PHOTOGRAPHS TAKEN			

IT CORPORATION

PROJECT

EQUIPMENT INSPECTION LOG

Equipment Type: 966 F

Equipment Supplier: S.S.S

I.D. #: 966 F

Date: 12-6-94

BRAKES	✓	COOLING WATER	✓
AIR SYSTEM	✓	OPERATING CONTROLS	✓
TIRES/TRACKS	✓	LIGHTS/REFLECTORS	✓
HORN	✓	WINDSHIELD WIPERS	✓
SAFETY DEVICES	✓	FIRE EXTINGUISHER	✓
GLASS	✓	BACKUP ALARM	
MIRRORS	✓	ENGINE OIL ✓	Add/Check
DEFROSTER	✓	EXHAUST SYSTEM	✓
STEERING SYSTEM	✓	FLUID LEVELS	✓
WIRE ROPE	NA	MAINTAINENCE MANUALS	✓
APPEARANCE	—	OPERATING MANUALS	✓
ELECTRICAL SYSTEM	✓	LOAD CHARTS	✓
INSPECTOR:	J Moore	DATE:	12-6-94
APPROVED:	[signature] (HEALTH &SAFETY)	DATE:	12·10 94
PHOTOGRAPHS TAKEN			

IT CORPORATION

PROJECT

EQUIPMENT INSPECTION LOG

Equipment Type: LOADER

Equipment Supplier: S S S.

I.D. #: 18

Date: 12-7-94

BRAKES	✓	COOLING WATER	✓
AIR SYSTEM	✓	OPERATING CONTROLS	✓
TIRES/TRACKS	✓	LIGHTS/REFLECTORS	✓
HORN	✓	WINDSHIELD WIPERS	✓
SAFETY DEVICES	✓	FIRE EXTINGUISHER	✓
GLASS	✓	BACKUP ALARM	✓
MIRRORS	✓	ENGINE OIL OK	Add/Check
DEFROSTER	✓	EXHAUST SYSTEM	✓
STEERING SYSTEM	✓	FLUID LEVELS	✓
WIRE ROPE	n/a	MAINTAINENCE MANUALS	✓
APPEARANCE	✓	OPERATING MANUALS	✓
ELECTRICAL SYSTEM	✓	LOAD CHARTS	✓
INSPECTOR: [illegible]		DATE: 12-7-94	
APPROVED: [illegible] (HEALTH &SAFETY)		DATE: 12-13-94	
PHOTOGRAPHS TAKEN			

IT CORPORATION

PROJECT

EQUIPMENT INSPECTION LOG

Equipment Type: IT 18F

Equipment Supplier:

I.D. #:

Date: 12-8-94

BRAKES	✓	COOLING WATER	
AIR SYSTEM	✓	OPERATING CONTROLS	Good
TIRES/TRACKS	✓	LIGHTS/REFLECTORS	✓
HORN	✓	WINDSHIELD WIPERS	✓
SAFETY DEVICES	✓	FIRE EXTINGUISHER	✓
GLASS	✓	BACKUP ALARM	✓
MIRRORS	✓	ENGINE OIL	Add/Check ✓
DEFROSTER	✓	EXHAUST SYSTEM	—
STEERING SYSTEM	✓	FLUID LEVELS	✓
WIRE ROPE		MAINTAINENCE MANUALS	
APPEARANCE	Good	OPERATING MANUALS	
ELECTRICAL SYSTEM	✓	LOAD CHARTS	
INSPECTOR:	[illegible]	DATE:	12-8-94
APPROVED: (HEALTH &SAFETY)	[illegible]	DATE:	12-13-94
PHOTOGRAPHS TAKEN			

IT CORPORATION

PROJECT

EQUIPMENT INSPECTION LOG

Equipment Type: TT28F

Equipment Supplier:

I.D. #:

Date: 12-9-94

BRAKES	✓	COOLING WATER	✓
AIR SYSTEM	✓	OPERATING CONTROLS	✓
TIRES/TRACKS	✓	LIGHTS/REFLECTORS	✓
HORN	✓	WINDSHIELD WIPERS	✓
SAFETY DEVICES	✓	FIRE EXTINGUISHER	✓
GLASS	✓	BACKUP ALARM	✓
MIRRORS	✓	ENGINE OIL Add/Check	✓
DEFROSTER	✓	EXHAUST SYSTEM	✓
STEERING SYSTEM	✓	FLUID LEVELS	✓
WIRE ROPE	✓	MAINTAINENCE MANUALS	✓
APPEARANCE	✓	OPERATING MANUALS	
ELECTRICAL SYSTEM	✓	LOAD CHARTS	
INSPECTOR:		DATE:	
APPROVED: (HEALTH &SAFETY)		DATE: 12-13-94	
PHOTOGRAPHS TAKEN			

IT CORPORATION

PROJECT

EQUIPMENT INSPECTION LOG

Equipment Type: IT 966 F

Equipment Supplier: S.S.S.

I.D. #: 966 F

Date: 12-9-94

BRAKES	✓	COOLING WATER	✓
AIR SYSTEM	✓	OPERATING CONTROLS	✓
TIRES/TRACKS	✓	LIGHTS/REFLECTORS	✓
HORN	✓	WINDSHIELD WIPERS	✓
SAFETY DEVICES	✓	FIRE EXTINGUISHER	✓
GLASS	✓	BACKUP ALARM	✓
MIRRORS	✓	ENGINE OIL ✓	Add/Check
DEFROSTER	✓	EXHAUST SYSTEM	✓
STEERING SYSTEM	✓	FLUID LEVELS	✓
WIRE ROPE	NA	MAINTAINENCE MANUALS	✓
APPEARANCE	—	OPERATING MANUALS	✓
ELECTRICAL SYSTEM	✓	LOAD CHARTS	✓
INSPECTOR: F Moore		DATE: 12-9-94	
APPROVED: [illegible] (HEALTH & SAFETY)		DATE: 12-13-94	
PHOTOGRAPHS TAKEN			

IT CORPORATION

PROJECT

EQUIPMENT INSPECTION LOG

Equipment Type: FRONT END LOADER

Equipment Supplier: S.S.S.

I.D. #: 18

Date: 12-12-94

BRAKES	✓	COOLING WATER	✓
AIR SYSTEM	✓	OPERATING CONTROLS	✓
TIRES/TRACKS	✓	LIGHTS/REFLECTORS	✓
HORN	✓	WINDSHIELD WIPERS	✓
SAFETY DEVICES	✓	FIRE EXTINGUISHER	✓
GLASS	✓	BACKUP ALARM	✓
MIRRORS	✓	ENGINE OIL OK. Add/Check	
DEFROSTER	✓	EXHAUST SYSTEM	✓
STEERING SYSTEM	✓	FLUID LEVELS	✓
WIRE ROPE	N/A	MAINTAINENCE MANUALS	✓
APPEARANCE	✓	OPERATING MANUALS	✓
ELECTRICAL SYSTEM	✓	LOAD CHARTS	✓
INSPECTOR: [signature]		DATE: 12-12-94	
APPROVED: [signature] (HEALTH &SAFETY)		DATE: 12-13-94	
PHOTOGRAPHS TAKEN			

IT CORPORATION

PROJECT

EQUIPMENT INSPECTION LOG

Equipment Type: FRONT END LOADER

Equipment Supplier: S.S.S.

I.D. #: 66

Date: 12-12-94

BRAKES	✓	COOLING WATER	✓
AIR SYSTEM	✓	OPERATING CONTROLS	✓
TIRES/TRACXS	✓	LIGHTS/REFLECTORS	✓
HORN	✓	WINDSHIELD WIPERS	✓
SAFETY DEVICES	✓	FIRE EXTINGUISHER	✓
GLASS	✓	BACKUP ALARM	✓
MIRRORS	✓	ENGINE OIL OK	Add/Check
DEFROSTER	✓	EXHAUST SYSTEM	✓
STEERING SYSTEM	✓	FLUID LEVELS	✓
WIRE ROPE	N/A	MAINTAINENCE MANUALS	✓
APPEARANCE	✓	OPERATING MANUALS	✓
ELECTRICAL SYSTEM	✓	LOAD CHARTS	✓
INSPECTOR:	F. Moore	DATE:	12-12-94
APPROVED:	[illegible signature] (HEALTH &SAFETY)	DATE:	12-13-94
PHOTOGRAPHS TAKEN			

IT CORPORATION

PROJECT

EQUIPMENT INSPECTION LOG

Equipment Type: ~~Track Hoe~~ Dozer

Equipment Supplier: S.S.C

I.D. #:

Date: 12-12-94

BRAKES	✓	COOLING WATER	✓
AIR SYSTEM	N/A	OPERATING CONTROLS	✓
TIRES/TRACKS	✓	LIGHTS/REFLECTORS	✓
HORN	✓	WINDSHIELD WIPERS	N/A
SAFETY DEVICES	✓	FIRE EXTINGUISHER	✓
GLASS	N/A Need some	BACKUP ALARM	✓
MIRRORS	✓	ENGINE OIL Add/Check	✓
DEFROSTER	Don't work worth a shit	EXHAUST SYSTEM	✓
STEERING SYSTEM	✓	FLUID LEVELS	✓
WIRE ROPE		MAINTAINENCE MANUALS	
APPEARANCE	good	OPERATING MANUALS	
ELECTRICAL SYSTEM	✓	LOAD CHARTS	
INSPECTOR:	M Stricklin	DATE:	12-12-94
APPROVED: (HEALTH & SAFETY)	[illegible]	DATE:	12-13-94
PHOTOGRAPHS TAKEN		Need Heater	

IT CORPORATION

PROJECT

EQUIPMENT INSPECTION LOG

Equipment Type: 120 BH

Equipment Supplier: S.S.

I.D. #:

Date: 12-12-94

BRAKES	✓	COOLING WATER	✓
AIR SYSTEM	✓	OPERATING CONTROLS	✓
TIRES/TRACKS	✓	LIGHTS/REFLECTORS	✓
HORN	✓	WINDSHIELD WIPERS	✓
SAFETY DEVICES	✓	FIRE EXTINGUISHER	✓
GLASS	✓	BACKUP ALARM	✓
MIRRORS	✓	ENGINE OIL	Add/Check
DEFROSTER	✓	EXHAUST SYSTEM	✓
STEERING SYSTEM	✓	FLUID LEVELS	✓
WIRE ROPE	NA	MAINTAINENCE MANUALS	✓
APPEARANCE	✓	OPERATING MANUALS	✓
ELECTRICAL SYSTEM	✓	LOAD CHARTS	✓
INSPECTOR: Ed Z		DATE: 12-12-94	
APPROVED: (HEALTH &SAFETY)		DATE: 12-13-94	
PHOTOGRAPHS TAKEN			

IT CORPORATION

PROJECT

EQUIPMENT INSPECTION LOG

Equipment Type: 120 BH

Equipment Supplier: S.S.

I.D. #:

Date: 12-13-94

BRAKES	✓	COOLING WATER	✓
AIR SYSTEM	✓	OPERATING CONTROLS	✓
TIRES/TRACKS	✓	LIGHTS/REFLECTORS	✓
HORN	✓	WINDSHIELD WIPERS	✓
SAFETY DEVICES	✓	FIRE EXTINGUISHER	✓
GLASS	✓	BACKUP ALARM	✓
MIRRORS	✓	ENGINE OIL	Add/Check
DEFROSTER	✓	EXHAUST SYSTEM	✓
STEERING SYSTEM	✓	FLUID LEVELS	✓
WIRE ROPE	NA	MAINTAINENCE MANUALS	✓
APPEARANCE	✓	OPERATING MANUALS	✓
ELECTRICAL SYSTEM	✓	LOAD CHARTS	✓
INSPECTOR:	[illegible]	DATE:	12-13-94
APPROVED:	[illegible] (HEALTH &SAFETY)	DATE:	
PHOTOGRAPHS TAKEN			

IT CORPORATION

PROJECT

EQUIPMENT INSPECTION LOG

Equipment Type: 966

Equipment Supplier: S.S.

I.D. #:

Date: 12-13-94

BRAKES	✓	COOLING WATER	✓
AIR SYSTEM	✓	OPERATING CONTROLS	✓
TIRES/TRACKS	✓	LIGHTS/REFLECTORS	✓
HORN	✓	WINDSHIELD WIPERS	✓
SAFETY DEVICES	✓	FIRE EXTINGUISHER	✓
GLASS	✓	BACKUP ALARM	✓
MIRRORS	✓	ENGINE OIL	Add/Check
DEFROSTER	✓	EXHAUST SYSTEM	✓
STEERING SYSTEM	✓	FLUID LEVELS	✓
WIRE ROPE	NA	MAINTAINENCE MANUALS	✓
APPEARANCE	✓	OPERATING MANUALS	✓
ELECTRICAL SYSTEM	✓	LOAD CHARTS	✓
INSPECTOR:	Ed F	DATE:	12-13-94
APPROVED: (HEALTH &SAFETY)	[illegible]	DATE:	
PHOTOGRAPHS TAKEN			

IT CORPORATION

PROJECT

EQUIPMENT INSPECTION LOG

Equipment Type: WATER TRUCK

Equipment Supplier: LUBER

I.D. #:

Date: 12/13/94

BRAKES	✓	COOLING WATER	✓
AIR SYSTEM	✓	OPERATING CONTROLS	✓
TIRES/TRACKS	✓	LIGHTS/REFLECTORS	
HORN		WINDSHIELD WIPERS	✓
SAFETY DEVICES		FIRE EXTINGUISHER	
GLASS	✓	BACKUP ALARM	
MIRRORS	✓	ENGINE OIL ✓ Add/Check	
DEFROSTER		EXHAUST SYSTEM	✓
STEERING SYSTEM	✓	FLUID LEVELS	✓
WIRE ROPE	N/A	MAINTAINENCE MANUALS	
APPEARANCE	✓	OPERATING MANUALS	
ELECTRICAL SYSTEM	✓	LOAD CHARTS	
INSPECTOR: R. Folsum		DATE: 12/13/94	
APPROVED: (HEALTH &SAFETY)		DATE:	
PHOTOGRAPHS TAKEN			

IT CORPORATION

PROJECT

EQUIPMENT INSPECTION LOG

Equipment Type: 120 BH

Equipment Supplier: J.S.

I.D. #:

Date: 12-14-94

BRAKES	✓	COOLING WATER	✓
AIR SYSTEM	✓	OPERATING CONTROLS	✓
TIRES/TRACKS	✓	LIGHTS/REFLECTORS	✓
HORN	✓	WINDSHIELD WIPERS	✓
SAFETY DEVICES	✓	FIRE EXTINGUISHER	✓
GLASS	✓	BACKUP ALARM	✓
MIRRORS	✓	ENGINE OIL ✓	Add/Check
DEFROSTER	✓	EXHAUST SYSTEM	✓
STEERING SYSTEM	✓	FLUID LEVELS	✓
WIRE ROPE	NA	MAINTAINENCE MANUALS	✓
APPEARANCE	✓	OPERATING MANUALS	✓
ELECTRICAL SYSTEM	✓	LOAD CHARTS	✓
INSPECTOR:	Ed X	DATE:	12-14-94
APPROVED:	Jy McCly (HEALTH &SAFETY)	DATE:	12/15/94
PHOTOGRAPHS TAKEN			

IT CORPORATION

PROJECT

EQUIPMENT INSPECTION LOG

Equipment Type: 966 F

Equipment Supplier: S.S.S.

I.D. #: 966 F

Date: 12-14-94

BRAKES	✓	COOLING WATER	✓
AIR SYSTEM	✓	OPERATING CONTROLS	✓
TIRES/TRACKS	✓	LIGHTS/REFLECTORS	✓
HORN	✓	WINDSHIELD WIPERS	✓
SAFETY DEVICES	✓	FIRE EXTINGUISHER	✓
GLASS	✓	BACKUP ALARM	
MIRRORS	✓	ENGINE OIL — Add/Check	✓
DEFROSTER	✓	EXHAUST SYSTEM	✓
STEERING SYSTEM	✓	FLUID LEVELS	✓
WIRE ROPE	N/A	MAINTAINENCE MANUALS	✓
APPEARANCE	✓	OPERATING MANUALS	✓
ELECTRICAL SYSTEM	✓	LOAD CHARTS	✓
INSPECTOR:	J Moore	DATE:	12-14-94
APPROVED: (HEALTH &SAFETY)	Jy McEy	DATE:	12/15/94
PHOTOGRAPHS TAKEN			

IT CORPORATION

PROJECT

EQUIPMENT INSPECTION LOG

Equipment Type: D3 Dozer

Equipment Supplier: SSS

I.D. #: D 3 Dozer

Date: 12-14-94

BRAKES	✓	COOLING WATER	✓
AIR SYSTEM	N/A	OPERATING CONTROLS	✓
TIRES/TRACKS	✓	LIGHTS/REFLECTORS	✓
HORN	✓	WINDSHIELD WIPERS	wish I had some
SAFETY DEVICES	✓	FIRE EXTINGUISHER	✓
GLASS	None	BACKUP ALARM	✓
MIRRORS	✓	ENGINE OIL	Add/Check ✓
DEFROSTER	wish I had one	EXHAUST SYSTEM	✓
STEERING SYSTEM	✓	FLUID LEVELS	✓
WIRE ROPE	✓	MAINTAINENCE MANUALS	✓
APPEARANCE	good	OPERATING MANUALS	✓
ELECTRICAL SYSTEM	✓	LOAD CHARTS	
INSPECTOR:	Michael Stricklin	DATE:	12-14-94
APPROVED:	Jy McGy (HEALTH &SAFETY)	DATE:	12/15/95
PHOTOGRAPHS TAKEN			

IT CORPORATION

PROJECT

EQUIPMENT INSPECTION LOG

Equipment Type: FRONT END LOADER

Equipment Supplier: S.S.S.

I.D. #: 18

Date: 12-14-94

BRAKES ✓	COOLING WATER ✓
AIR SYSTEM ✓	OPERATING CONTROLS ✓
TIRES/TRACKS ✓	LIGHTS/REFLECTORS ✓
HORN ✓	WINDSHIELD WIPERS ✓
SAFETY DEVICES ✓	FIRE EXTINGUISHER ✓
GLASS ✓	BACKUP ALARM ✓
MIRRORS ✓	ENGINE OIL O.K. Add/Check
DEFROSTER ✓	EXHAUST SYSTEM ✓
STEERING SYSTEM ✓	FLUID LEVELS ✓
WIRE ROPE N/A	MAINTAINENCE MANUALS ✓
APPEARANCE ✓	OPERATING MANUALS ✓
ELECTRICAL SYSTEM ✓	LOAD CHARTS ✓
INSPECTOR: [signature]	DATE: 12-14-94
APPROVED: [signature] (HEALTH &SAFETY)	DATE: 12/15/95
PHOTOGRAPHS TAKEN	

IT CORPORATION

PROJECT

EQUIPMENT INSPECTION LOG

Equipment Type: 120 BH

Equipment Supplier: S.S.

I.D. #:

Date: 12-15-94

BRAKES	✓	COOLING WATER	✓
AIR SYSTEM	✓	OPERATING CONTROLS	✓
TIRES/TRACKS	✓	LIGHTS/REFLECTORS	✓
HORN	✓	WINDSHIELD WIPERS	✓
SAFETY DEVICES	✓	FIRE EXTINGUISHER	✓
GLASS	✓	BACKUP ALARM	✓
MIRRORS	✓	ENGINE OIL ✓	Add/Check
DEFROSTER	✓	EXHAUST SYSTEM	✓
STEERING SYSTEM	✓	FLUID LEVELS	✓
WIRE ROPE	NA	MAINTAINENCE MANUALS	✓
APPEARANCE	✓	OPERATING MANUALS	✓
ELECTRICAL SYSTEM	✓	LOAD CHARTS	✓
INSPECTOR:	E.Z.	DATE:	12-15-94
APPROVED: (HEALTH &SAFETY)	[illegible]	DATE:	12/15/94
PHOTOGRAPHS TAKEN			

IT CORPORATION

PROJECT

EQUIPMENT INSPECTION LOG

Equipment Type: D3 Dozer

Equipment Supplier: S.S.

I.D. #:

Date: 12-15-94

BRAKES	✓	COOLING WATER	✓
AIR SYSTEM	✓	OPERATING CONTROLS	✓
TIRES/TRACKS	✓	LIGHTS/REFLECTORS	✓
HORN	✓	WINDSHIELD WIPERS	NA
SAFETY DEVICES	✓	FIRE EXTINGUISHER	✓
GLASS	NA	BACKUP ALARM	✓
MIRRORS	✓	ENGINE OIL	Add/Check
DEFROSTER	NA	EXHAUST SYSTEM	✓
STEERING SYSTEM	✓	FLUID LEVELS	✓
WIRE ROPE	NA	MAINTAINENCE MANUALS	✓
APPEARANCE	✓	OPERATING MANUALS	✓
ELECTRICAL SYSTEM	✓	LOAD CHARTS	✓
INSPECTOR:	[illegible]	DATE:	12-15-94
APPROVED: (HEALTH &SAFETY)	[illegible]	DATE:	12/15/94
PHOTOGRAPHS TAKEN			

IT CORPORATION

PROJECT

EQUIPMENT INSPECTION LOG

Equipment Type: IT 28

Equipment Supplier: S.S.

I.D. #:

Date: 12-17-94

BRAKES	✓	COOLING WATER	✓
AIR SYSTEM	✓	OPERATING CONTROLS	✓
TIRES/TRACKS	✓	LIGHTS/REFLECTORS	✓
HORN	✓	WINDSHIELD WIPERS	✓
SAFETY DEVICES	✓	FIRE EXTINGUISHER	✓
GLASS	✓	BACKUP ALARM	✓
MIRRORS	✓	ENGINE OIL	Add/Check
DEFROSTER	✓	EXHAUST SYSTEM	✓
STEERING SYSTEM	✓	FLUID LEVELS	✓
WIRE ROPE	NA	MAINTAINENCE MANUALS	✓
APPEARANCE	✓	OPERATING MANUALS	✓
ELECTRICAL SYSTEM	✓	LOAD CHARTS	✓
INSPECTOR:	[illegible]	DATE:	12-17-94
APPROVED: (HEALTH &SAFETY)	12/18/94 [illegible]	DATE:	12/18/94
PHOTOGRAPHS TAKEN			

IT CORPORATION

PROJECT

EQUIPMENT INSPECTION LOG

Equipment Type: 120 BH

Equipment Supplier: S.S.

I.D. #:

Date: 12-17-94

BRAKES	✓	COOLING WATER	✓
AIR SYSTEM	✓	OPERATING CONTROLS	✓
TIRES/TRACKS	✓	LIGHTS/REFLECTORS	✓
HORN	✓	WINDSHIELD WIPERS	✓
SAFETY DEVICES	✓	FIRE EXTINGUISHER	✓
GLASS	✓	BACKUP ALARM	✓
MIRRORS	✓	ENGINE OIL	Add/Check
DEFROSTER	✓	EXHAUST SYSTEM	✓
STEERING SYSTEM	✓	FLUID LEVELS	✓
WIRE ROPE	NA	MAINTAINENCE MANUALS	✓
APPEARANCE	✓	OPERATING MANUALS	✓
ELECTRICAL SYSTEM	✓	LOAD CHARTS	✓
INSPECTOR:	Ed F	DATE:	12-17-94
APPROVED:	Gy MEG (HEALTH &SAFETY)	DATE:	12/18/94
PHOTOGRAPHS TAKEN			

IT CORPORATION

PROJECT

EQUIPMENT INSPECTION LOG

Equipment Type: Dozer

Equipment Supplier: S.S.

I.D. #:

Date: 1-4-95

BRAKES	✓	COOLING WATER	✓
AIR SYSTEM	✓	OPERATING CONTROLS	✓
TIRES/TRACKS	✓	LIGHTS/REFLECTORS	✓
HORN	✓	WINDSHIELD WIPERS	NA
SAFETY DEVICES	✓	FIRE EXTINGUISHER	✓
GLASS	✓	BACKUP ALARM	✓
MIRRORS	✓	ENGINE OIL	Add/Check
DEFROSTER	NA	EXHAUST SYSTEM	✓
STEERING SYSTEM	✓	FLUID LEVELS	✓
WIRE ROPE	NA	MAINTAINENCE MANUALS	✓
APPEARANCE	✓	OPERATING MANUALS	✓
ELECTRICAL SYSTEM	✓	LOAD CHARTS	✓
INSPECTOR:	Ed [illegible]	DATE:	1-4-94
APPROVED: (HEALTH &SAFETY)	[illegible]	DATE:	1-4-94
PHOTOGRAPHS TAKEN			

IT CORPORATION

PROJECT

EQUIPMENT INSPECTION LOG

Equipment Type: 966

Equipment Supplier: S.S.

I.D. #:

Date: 1-4-94

BRAKES	✓	COOLING WATER	✓
AIR SYSTEM	✓	OPERATING CONTROLS	✓
TIRES/TRACKS	✓	LIGHTS/REFLECTORS	✓
HORN	✓	WINDSHIELD WIPERS	✓
SAFETY DEVICES	✓	FIRE EXTINGUISHER	✓
GLASS	✓	BACKUP ALARM	—
MIRRORS	✓	ENGINE OIL	Add/Check
DEFROSTER	✓	EXHAUST SYSTEM	✓
STEERING SYSTEM	✓	FLUID LEVELS	—
WIRE ROPE	NA	MAINTAINENCE MANUALS	✓
APPEARANCE	✓	OPERATING MANUALS	✓
ELECTRICAL SYSTEM	✓	LOAD CHARTS	—
INSPECTOR:	F. Moore	DATE:	1-4-94
APPROVED: (HEALTH &SAFETY)	[illegible]	DATE:	1/4/94
PHOTOGRAPHS TAKEN			

IT CORPORATION

PROJECT

EQUIPMENT INSPECTION LOG

Equipment Type: 120

Equipment Supplier: S.S.

I.D. #:

Date: 1-4-95

BRAKES	✓	COOLING WATER	✓
AIR SYSTEM	✓	OPERATING CONTROLS	✓
TIRES/TRACKS	✓	LIGHTS/REFLECTORS	✓
HORN	✓	WINDSHIELD WIPERS	✓
SAFETY DEVICES	✓	FIRE EXTINGUISHER	✓
GLASS	✓	BACKUP ALARM	✓
MIRRORS	✓	ENGINE OIL	Add/Check
DEFROSTER	✓	EXHAUST SYSTEM	✓
STEERING SYSTEM	✓	FLUID LEVELS	✓
WIRE ROPE	NA	MAINTAINENCE MANUALS	✓
APPEARANCE	✓	OPERATING MANUALS	✓
ELECTRICAL SYSTEM	✓	LOAD CHARTS	✓
INSPECTOR:	Ed J	DATE:	1-4-95
APPROVED:	Gary McEly (HEALTH &SAFETY)	DATE:	1/4/95
PHOTOGRAPHS TAKEN			

IT CORPORATION

PROJECT

EQUIPMENT INSPECTION LOG

Equipment Type: 966

Equipment Supplier: S.S

I.D. #:

Date: 1-5-95

BRAKES	✓	COOLING WATER	✓
AIR SYSTEM	✓	OPERATING CONTROLS	✓
TIRES/TRACKS	✓	LIGHTS/REFLECTORS	✓
HORN	✓	WINDSHIELD WIPERS	✓
SAFETY DEVICES	✓	FIRE EXTINGUISHER	✓
GLASS	✓	BACKUP ALARM	✓
MIRRORS	✓	ENGINE OIL	Add/Check
DEFROSTER	✓	EXHAUST SYSTEM	✓
STEERING SYSTEM	✓	FLUID LEVELS	✓
WIRE ROPE	✓	MAINTAINENCE MANUALS	✓
APPEARANCE	✓	OPERATING MANUALS	✓
ELECTRICAL SYSTEM	✓	LOAD CHARTS	✓
INSPECTOR:	F. Moore	DATE:	1-5-95
APPROVED:	(HEALTH &SAFETY)	DATE:	1-9-95
PHOTOGRAPHS TAKEN			

IT CORPORATION

PROJECT

EQUIPMENT INSPECTION LOG

Equipment Type: LOADER

Equipment Supplier: SSS

I.D. #: 28

Date: 1-5-95

BRAKES	✓	COOLING WATER	✓
AIR SYSTEM	✓	OPERATING CONTROLS	✓
TIRES/TRACKS	✓	LIGHTS/REFLECTORS	✓
HORN	✓	WINDSHIELD WIPERS	✓
SAFETY DEVICES	✓	FIRE EXTINGUISHER	✓
GLASS	✓	BACKUP ALARM	✓
MIRRORS	✓	ENGINE OIL OK	Add/Check
DEFROSTER	✓	EXHAUST SYSTEM	✓
STEERING SYSTEM	✓	FLUID LEVELS	✓
WIRE ROPE	N/A	MAINTAINENCE MANUALS	✓
APPEARANCE	✓	OPERATING MANUALS	✓
ELECTRICAL SYSTEM	✓	LOAD CHARTS	✓
INSPECTOR: [signature]		DATE: 1-5-95	
APPROVED: [signature] (HEALTH &SAFETY)		DATE: 1-8-95	
PHOTOGRAPHS TAKEN			

IT CORPORATION

PROJECT

EQUIPMENT INSPECTION LOG

Equipment Type: LOADER

Equipment Supplier: SSS

I.D. #: 18

Date: 1-5-95

BRAKES	✓	COOLING WATER	✓
AIR SYSTEM	✓	OPERATING CONTROLS	✓
TIRES/TRACKS	✓	LIGHTS/REFLECTORS	✓
HORN	✓	WINDSHIELD WIPERS	✓
SAFETY DEVICES	✓	FIRE EXTINGUISHER	✓
GLASS	✓	BACKUP ALARM	✓
MIRRORS	✓	ENGINE OIL	OK Add/Check
DEFROSTER	✓	EXHAUST SYSTEM	✓
STEERING SYSTEM	✓	FLUID LEVELS	✓
WIRE ROPE	N/A	MAINTAINENCE MANUALS	✓
APPEARANCE	✓	OPERATING MANUALS	✓
ELECTRICAL SYSTEM	✓	LOAD CHARTS	✓
INSPECTOR:	[signature]	DATE:	1-5-95
APPROVED: (HEALTH &SAFETY)	[signature]	DATE:	1-9-95
PHOTOGRAPHS TAKEN			

IT CORPORATION

PROJECT

EQUIPMENT INSPECTION LOG

Equipment Type: 1-1 O

Equipment Supplier: S.S

I.D. #:

Date: 1-5-95

BRAKES	✓	COOLING WATER	✓
AIR SYSTEM	✓	OPERATING CONTROLS	✓
TIRES/TRACKS	✓	LIGHTS/REFLECTORS	✓
HORN	✓	WINDSHIELD WIPERS	✓
SAFETY DEVICES	✓	FIRE EXTINGUISHER	✓
GLASS	✓	BACKUP ALARM	✓
MIRRORS	✓	ENGINE OIL	Add/Check
DEFROSTER	✓	EXHAUST SYSTEM	✓
STEERING SYSTEM	✓	FLUID LEVELS	✓
WIRE ROPE	NA	MAINTAINENCE MANUALS	✓
APPEARANCE	✓	OPERATING MANUALS	✓
ELECTRICAL SYSTEM	✓	LOAD CHARTS	✓
INSPECTOR:	[illegible]	DATE:	1-5-95
APPROVED:	[illegible] (HEALTH &SAFETY)	DATE:	1-8-95
PHOTOGRAPHS TAKEN			

IT CORPORATION

PROJECT

EQUIPMENT INSPECTION LOG

Equipment Type: Dozer

Equipment Supplier: S S

I.D. #:

Date: 1-5-95

BRAKES	✓	COOLING WATER	✓
AIR SYSTEM	✓	OPERATING CONTROLS	✓
TIRES/TRACKS	✓	LIGHTS/REFLECTORS	✓
HORN	✓	WINDSHIELD WIPERS	NA
SAFETY DEVICES	✓	FIRE EXTINGUISHER	✓
GLASS	✓	BACKUP ALARM	✓
MIRRORS	✓	ENGINE OIL	Add/Check
DEFROSTER	NA	EXHAUST SYSTEM	✓
STEERING SYSTEM	✓	FLUID LEVELS	✓
WIRE ROPE	NA	MAINTAINENCE MANUALS	✓
APPEARANCE	✓	OPERATING MANUALS	✓
ELECTRICAL SYSTEM	✓	LOAD CHARTS	✓
INSPECTOR:	[illegible]	DATE:	1-5-95
APPROVED: (HEALTH &SAFETY)	[illegible]	DATE:	1-8-95
PHOTOGRAPHS TAKEN			

IT CORPORATION

PROJECT

EQUIPMENT INSPECTION LOG

Equipment Type: Dozer

Equipment Supplier: SS

I.D. #: CPT D3

Date: 1/5/95

BRAKES	✓	COOLING WATER	✓
AIR SYSTEM	N/A	OPERATING CONTROLS	✓
TIRES/TRACKS	✓	LIGHTS/REFLECTORS	✓
HORN	✓	WINDSHIELD WIPERS	N/A
SAFETY DEVICES	✓	FIRE EXTINGUISHER	✓
GLASS	N/A	BACKUP ALARM	✓
MIRRORS	✓	ENGINE OIL ✓	Add/Check
DEFROSTER	N/A	EXHAUST SYSTEM	✓
STEERING SYSTEM	✓	FLUID LEVELS	✓
WIRE ROPE	N/A	MAINTAINENCE MANUALS	✓
APPEARANCE	✓	OPERATING MANUALS	✓
ELECTRICAL SYSTEM	✓	LOAD CHARTS	✓
INSPECTOR:	[illegible]	DATE:	1/8/95
APPROVED: (HEALTH &SAFETY)	[illegible]	DATE:	1-8/95
PHOTOGRAPHS TAKEN			

IT CORPORATION

PROJECT

EQUIPMENT INSPECTION LOG

Equipment Type: Loader

Equipment Supplier: SS

I.D. #: 28

Date: 1-6-95

BRAKES	✓	COOLING WATER	✓
AIR SYSTEM	✓	OPERATING CONTROLS	✓
TIRES/TRACKS	✓	LIGHTS/REFLECTORS	✓
HORN	✓	WINDSHIELD WIPERS	✓
SAFETY DEVICES	✓	FIRE EXTINGUISHER	✓
GLASS	✓	BACKUP ALARM	✓
MIRRORS	✓	ENGINE OIL	Add/Check
DEFROSTER	✓	EXHAUST SYSTEM	✓
STEERING SYSTEM	✓	FLUID LEVELS	✓
WIRE ROPE	N/A	MAINTAINENCE MANUALS	✓
APPEARANCE	✓	OPERATING MANUALS	✓
ELECTRICAL SYSTEM	✓	LOAD CHARTS	✓
INSPECTOR:	[signature]	DATE:	1-6-95
APPROVED: (HEALTH &SAFETY)	[signature]	DATE:	1-9-95
PHOTOGRAPHS TAKEN			

IT CORPORATION

PROJECT

EQUIPMENT INSPECTION LOG

Equipment Type: LOADER

Equipment Supplier: SS

I.D. #: 18

Date: 1-6-95

BRAKES	✓	COOLING WATER	✓
AIR SYSTEM	✓	OPERATING CONTROLS	✓
TIRES/TRACKS	✓	LIGHTS/REFLECTORS	✓
HORN	✓	WINDSHIELD WIPERS	✓
SAFETY DEVICES	✓	FIRE EXTINGUISHER	✓
GLASS	✓	BACKUP ALARM	✓
MIRRORS	✓	ENGINE OIL	Add/Check
DEFROSTER	✓	EXHAUST SYSTEM	✓
STEERING SYSTEM	✓	FLUID LEVELS	✓
WIRE ROPE	n/a	MAINTAINENCE MANUALS	✓
APPEARANCE	✓	OPERATING MANUALS	✓
ELECTRICAL SYSTEM	✓	LOAD CHARTS	✓
INSPECTOR:	[illegible]	DATE:	1-6-95
APPROVED: (HEALTH &SAFETY)	[illegible]	DATE:	1-9/95
PHOTOGRAPHS TAKEN			

IT CORPORATION

PROJECT

EQUIPMENT INSPECTION LOG

Equipment Type: Loader

Equipment Supplier: SS

I.D. #: SS

Date: 1-6-95

BRAKES ✓	COOLING WATER ✓
AIR SYSTEM ✓	OPERATING CONTROLS ✓
TIRES/TRACKS ✓	LIGHTS/REFLECTORS ✓
HORN ✓	WINDSHIELD WIPERS ✓
SAFETY DEVICES ✓	FIRE EXTINGUISHER ✓
GLASS ✓	BACKUP ALARM ✓
MIRRORS ✓	ENGINE OIL Add/Check
DEFROSTER ✓	EXHAUST SYSTEM ✓
STEERING SYSTEM ✓	FLUID LEVELS ✓
WIRE ROPE ✓	MAINTAINENCE MANUALS ✓
APPEARANCE ✓	OPERATING MANUALS ✓
ELECTRICAL SYSTEM ✓	LOAD CHARTS ✓
INSPECTOR: [signature]	DATE: 1-6-95
APPROVED: [signature] (HEALTH &SAFETY)	DATE: 1-8-95
PHOTOGRAPHS TAKEN	

IT CORPORATION

PROJECT

EQUIPMENT INSPECTION LOG

Equipment Type: Track Hoe

Equipment Supplier: SS

I.D. #:

Date: 1-6-95

BRAKES	✓	COOLING WATER	✓
AIR SYSTEM	✓	OPERATING CONTROLS	✓
TIRES/TRACKS	✓	LIGHTS/REFLECTORS	✓
HORN	✓	WINDSHIELD WIPERS	✓
SAFETY DEVICES	✓	FIRE EXTINGUISHER	✓
GLASS	✓	BACKUP ALARM	✓
MIRRORS	✓	ENGINE OIL Add/Check	✓
DEFROSTER	✓	EXHAUST SYSTEM	✓
STEERING SYSTEM	✓	FLUID LEVELS	✓
WIRE ROPE	✓	MAINTAINENCE MANUALS	✓
APPEARANCE	✓	OPERATING MANUALS	✓
ELECTRICAL SYSTEM	✓	LOAD CHARTS	
INSPECTOR:	[illegible]	DATE:	1-5-95
APPROVED: (HEALTH &SAFETY)	[illegible]	DATE:	1-8-95
PHOTOGRAPHS TAKEN			

IT CORPORATION

PROJECT

EQUIPMENT INSPECTION LOG

Equipment Type: Trackhoe

Equipment Supplier: SS

I.D. #:

Date: 1-7-95

BRAKES	✓	COOLING WATER	✓
AIR SYSTEM	✓	OPERATING CONTROLS	✓
TIRES/TRACKS	✓	LIGHTS/REFLECTORS	✓
HORN	✓	WINDSHIELD WIPERS	✓
SAFETY DEVICES	✓	FIRE EXTINGUISHER	✓
GLASS	✓	BACKUP ALARM	✓
MIRRORS	✓	ENGINE OIL Add/Check	✓
DEFROSTER	✓	EXHAUST SYSTEM	✓
STEERING SYSTEM	✓	FLUID LEVELS	✓
WIRE ROPE	✓	MAINTAINENCE MANUALS	✓
APPEARANCE	✓	OPERATING MANUALS	✓
ELECTRICAL SYSTEM	✓	LOAD CHARTS	
INSPECTOR: [signature]		DATE: 1-7-95	
APPROVED: Gy McEg (HEALTH &SAFETY)		DATE: 1/8/95	
PHOTOGRAPHS TAKEN			

IT CORPORATION

PROJECT

EQUIPMENT INSPECTION LOG

Equipment Type: LOADER

Equipment Supplier: SS

I.D. #: 28

Date: 1-7-95

BRAKES	✓	COOLING WATER	✓
AIR SYSTEM	✓	OPERATING CONTROLS	✓
TIRES/TRACKS	✓	LIGHTS/REFLECTORS	✓
HORN	✓	WINDSHIELD WIPERS	✓
SAFETY DEVICES	✓	FIRE EXTINGUISHER	✓
GLASS	✓	BACKUP ALARM	✓
MIRRORS	✓	ENGINE OIL	Add/Check
DEFROSTER	✓	EXHAUST SYSTEM	✓
STEERING SYSTEM	✓	FLUID LEVELS	✓
WIRE ROPE	✓	MAINTAINENCE MANUALS	✓
APPEARANCE	✓	OPERATING MANUALS	✓
ELECTRICAL SYSTEM	✓	LOAD CHARTS	✓
INSPECTOR:		DATE:	1-7-95
APPROVED: (HEALTH &SAFETY)		DATE:	1-9-95
PHOTOGRAPHS TAKEN			

IT CORPORATION

PROJECT

EQUIPMENT INSPECTION LOG

Equipment Type: LOADER

Equipment Supplier: S.S

I.D. #: 18

Date: 1-7-95

BRAKES	✓	COOLING WATER	✓
AIR SYSTEM	✓	OPERATING CONTROLS	✓
TIRES/TRACKS	✓	LIGHTS/REFLECTORS	✓
HORN	✓	WINDSHIELD WIPERS	✓
SAFETY DEVICES	✓	FIRE EXTINGUISHER	✓
GLASS	✓	BACKUP ALARM	✓
MIRRORS	✓	ENGINE OIL	Add/Check
DEFROSTER	✓	EXHAUST SYSTEM	✓
STEERING SYSTEM	✓	FLUID LEVELS	✓
WIRE ROPE	N/A	MAINTAINENCE MANUALS	✓
APPEARANCE	✓	OPERATING MANUALS	✓
ELECTRICAL SYSTEM	✓	LOAD CHARTS	✓
INSPECTOR:		DATE: 1-7-95	
APPROVED: (HEALTH &SAFETY)		DATE: 1-9/95	
PHOTOGRAPHS TAKEN			

IT CORPORATION

PROJECT

EQUIPMENT INSPECTION LOG

Equipment Type: IT 18 F

Equipment Supplier: S.S.S

I.D. #: 18

Date: 1-8-95

BRAKES	✓	COOLING WATER	✓
AIR SYSTEM	✓	OPERATING CONTROLS	✓
TIRES/TRACKS	✓	LIGHTS/REFLECTORS	✓
HORN	✓	WINDSHIELD WIPERS	✓
SAFETY DEVICES	✓	FIRE EXTINGUISHER	✓
GLASS	✓	BACKUP ALARM	✓
MIRRORS	✓	ENGINE OIL ✓	Add/Check
DEFROSTER	✓	EXHAUST SYSTEM	✓
STEERING SYSTEM	✓	FLUID LEVELS	✓
WIRE ROPE	N/A	MAINTAINENCE MANUALS	✓
APPEARANCE	✓	OPERATING MANUALS	✓
ELECTRICAL SYSTEM	✓	LOAD CHARTS	✓
INSPECTOR:	F Moore	DATE:	1-8-95
APPROVED:	[illegible] (HEALTH &SAFETY)	DATE:	1-8-95
PHOTOGRAPHS TAKEN			

IT CORPORATION

PROJECT

EQUIPMENT INSPECTION LOG

Equipment Type: 966

Equipment Supplier: S.S.S.

I.D. #: 966

Date: 1-8-95

BRAKES	✓	COOLING WATER	✓
AIR SYSTEM	✓	OPERATING CONTROLS	✓
TIRES/TRACKS	✓	LIGHTS/REFLECTORS	✓
HORN	✓	WINDSHIELD WIPERS	✓
SAFETY DEVICES	✓	FIRE EXTINGUISHER	✓
GLASS	✓	BACKUP ALARM	✓
MIRRORS	✓	ENGINE OIL ✓	Add/Check
DEFROSTER	✓	EXHAUST SYSTEM	✓
STEERING SYSTEM	✓	FLUID LEVELS	✓
WIRE ROPE	N/A	MAINTAINENCE MANUALS	✓
APPEARANCE	✓	OPERATING MANUALS	✓
ELECTRICAL SYSTEM	✓	LOAD CHARTS	✓
INSPECTOR:	~~1-8-95~~ P. CLOUD	DATE:	1-8-95
APPROVED:	[signature] (HEALTH &SAFETY)	DATE:	1-8/95
PHOTOGRAPHS TAKEN			

IT CORPORATION

PROJECT

EQUIPMENT INSPECTION LOG

Equipment Type: 120 TRAC HOE

Equipment Supplier: S.S.S.

I.D. #: 120

Date: 1-8-95

BRAKES	✓	COOLING WATER	✓
AIR SYSTEM	✓	OPERATING CONTROLS	✓
TIRES/TRACKS	✓	LIGHTS/REFLECTORS	✓
HORN	✓	WINDSHIELD WIPERS	✓
SAFETY DEVICES	✓	FIRE EXTINGUISHER	✓
GLASS	✓	BACKUP ALARM	✓
MIRRORS	✓	ENGINE OIL ✓	Add/Check
DEFROSTER	✓	EXHAUST SYSTEM	✓
STEERING SYSTEM	✓	FLUID LEVELS	✓
WIRE ROPE	NA	MAINTAINENCE MANUALS	✓
APPEARANCE	✓	OPERATING MANUALS	✓
ELECTRICAL SYSTEM	✓	LOAD CHARTS	✓
INSPECTOR:	M. STRICKLIN	DATE:	1-8-95
APPROVED:	[illegible] (HEALTH &SAFETY)	DATE:	1-8-95
PHOTOGRAPHS TAKEN			

IT CORPORATION

PROJECT

EQUIPMENT INSPECTION LOG

Equipment Type: Dozer

Equipment Supplier: S.S

I.D. #: CAT D-3 Dozer

Date: 1/11/95

BRAKES	✓	COOLING WATER	✓
AIR SYSTEM	N/A	OPERATING CONTROLS	✓
TIRES/TRACKS	✓	LIGHTS/REFLECTORS	✓
HORN	✓	WINDSHIELD WIPERS	N/A
SAFETY DEVICES	✓	FIRE EXTINGUISHER	✓
GLASS	N/A	BACKUP ALARM	✓
MIRRORS	✓	ENGINE OIL	✓ Add/~~check~~
DEFROSTER	N/A	EXHAUST SYSTEM	✓
STEERING SYSTEM	✓	FLUID LEVELS	✓
WIRE ROPE	N/A	MAINTAINENCE MANUALS	✓
APPEARANCE	✓	OPERATING MANUALS	✓
ELECTRICAL SYSTEM	✓	LOAD CHARTS	✓
INSPECTOR:	[signature]	DATE:	1/11/95
APPROVED: (HEALTH &SAFETY)	[signature]	DATE:	1-12-95
PHOTOGRAPHS TAKEN			

IT CORPORATION

PROJECT

EQUIPMENT INSPECTION LOG

Equipment Type: LOADER

Equipment Supplier: S.S.S.

I.D. #: 66

Date: 1-11-95

BRAKES	✓	COOLING WATER	✓
AIR SYSTEM	✓	OPERATING CONTROLS	✓
TIRES/TRACKS	✓	LIGHTS/REFLECTORS	✓
HORN	✓	WINDSHIELD WIPERS	✓
SAFETY DEVICES	✓	FIRE EXTINGUISHER	✓
GLASS	✓	BACKUP ALARM	✓
MIRRORS	✓	ENGINE OIL	Add/Check
DEFROSTER	✓	EXHAUST SYSTEM	✓
STEERING SYSTEM	✓	FLUID LEVELS	✓
WIRE ROPE	N/A	MAINTAINENCE MANUALS	✓
APPEARANCE	✓	OPERATING MANUALS	✓
ELECTRICAL SYSTEM	✓	LOAD CHARTS	✓
INSPECTOR:	[signature]	DATE:	1-11-95
APPROVED: (HEALTH &SAFETY)	[signature]	DATE:	1-12-95
PHOTOGRAPHS TAKEN			

IT CORPORATION

PROJECT

EQUIPMENT INSPECTION LOG

Equipment Type: Loader

Equipment Supplier: S.S.S.

I.D. #: 18

Date: 1-11-95

BRAKES	✓	COOLING WATER	✓
AIR SYSTEM	✓	OPERATING CONTROLS	✓
TIRES/TRACKS	✓	LIGHTS/REFLECTORS	✓
HORN	✓	WINDSHIELD WIPERS	✓
SAFETY DEVICES	✓	FIRE EXTINGUISHER	✓
GLASS	✓	BACKUP ALARM	✓
MIRRORS	✓	ENGINE OIL	Add/Check
DEFROSTER	✓	EXHAUST SYSTEM	✓
STEERING SYSTEM	✓	FLUID LEVELS	✓
WIRE ROPE	N/A	MAINTAINENCE MANUALS	✓
APPEARANCE	✓	OPERATING MANUALS	✓
ELECTRICAL SYSTEM	✓	LOAD CHARTS	✓
INSPECTOR:	[signature]	DATE:	1-11-95
APPROVED: (HEALTH &SAFETY)	[signature]	DATE:	1-12-95
PHOTOGRAPHS TAKEN			

IT CORPORATION

PROJECT

EQUIPMENT INSPECTION LOG

Equipment Type: LOADER

Equipment Supplier: S.S.S.

I.D. #: 28

Date: 1-11-95

BRAKES	✓	COOLING WATER	✓
AIR SYSTEM	✓	OPERATING CONTROLS	✓
TIRES/TRACKS	✓	LIGHTS/REFLECTORS	✓
HORN	✓	WINDSHIELD WIPERS	✓
SAFETY DEVICES	✓	FIRE EXTINGUISHER	✓
GLASS	✓	BACKUP ALARM	✓
MIRRORS	✓	ENGINE OIL	Add/Check
DEFROSTER	✓	EXHAUST SYSTEM	✓
STEERING SYSTEM	✓	FLUID LEVELS	✓
WIRE ROPE	N/A	MAINTAINENCE MANUALS	✓
APPEARANCE	✓	OPERATING MANUALS	✓
ELECTRICAL SYSTEM	✓	LOAD CHARTS	✓
INSPECTOR:	Rick Folsum	DATE:	1-11-94
APPROVED:	Jay McEly (HEALTH &SAFETY)	DATE:	1-12-95
PHOTOGRAPHS TAKEN			

IT CORPORATION

PROJECT

EQUIPMENT INSPECTION LOG

Equipment Type: Hoe

Equipment Supplier: S.S.S.

I.D. #: 120

Date: 1-11-95

BRAKES	✓	COOLING WATER	✓
AIR SYSTEM	✓	OPERATING CONTROLS	✓
TIRES/TRACKS	✓	LIGHTS/REFLECTORS	✓
HORN	✓	WINDSHIELD WIPERS	✓
SAFETY DEVICES	✓	FIRE EXTINGUISHER	✓
GLASS	✓	BACKUP ALARM	✓
MIRRORS	✓	ENGINE OIL	Add/Check
DEFROSTER	✓	EXHAUST SYSTEM	✓
STEERING SYSTEM	✓	FLUID LEVELS	✓
WIRE ROPE	N/A	MAINTAINENCE MANUALS	✓
APPEARANCE	✓	OPERATING MANUALS	✓
ELECTRICAL SYSTEM	✓	LOAD CHARTS	✓
INSPECTOR:	RB	DATE:	1-11-95
APPROVED: (HEALTH &SAFETY)	Jay McEly	DATE:	1-12/95
PHOTOGRAPHS TAKEN			

IT CORPORATION

PROJECT

EQUIPMENT INSPECTION LOG

Equipment Type: FRONT END LOADER

Equipment Supplier: S.S.S.

I.D. #: 18

Date: 1-12-95

BRAKES	✓	COOLING WATER	✓
AIR SYSTEM	✓	OPERATING CONTROLS	✓
TIRES/TRACKS	✓	LIGHTS/REFLECTORS	✓
HORN	✓	WINDSHIELD WIPERS	✓
SAFETY DEVICES	✓	FIRE EXTINGUISHER	✓
GLASS	✓	BACKUP ALARM	✓
MIRRORS	✓	ENGINE OIL	Add/Check
DEFROSTER	✓	EXHAUST SYSTEM	✓
STEERING SYSTEM	✓	FLUID LEVELS	✓
WIRE ROPE	N/A	MAINTAINENCE MANUALS	✓
APPEARANCE	✓	OPERATING MANUALS	✓
ELECTRICAL SYSTEM	✓	LOAD CHARTS	✓
INSPECTOR:	[signature]	DATE:	1-12-95
APPROVED: (HEALTH &SAFETY)	[signature]	DATE:	1/15/95
PHOTOGRAPHS TAKEN			

IT CORPORATION

PROJECT

EQUIPMENT INSPECTION LOG

Equipment Type: FRONT END LOADER

Equipment Supplier: S.S.S.

I.D. #: 28

Date: 1-12-95

BRAKES	✓	COOLING WATER	✓
AIR SYSTEM	✓	OPERATING CONTROLS	✓
TIRES/TRACKS	✓	LIGHTS/REFLECTORS	✓
HORN	✓	WINDSHIELD WIPERS	✓
SAFETY DEVICES	✓	FIRE EXTINGUISHER	✓
GLASS	✓	BACKUP ALARM	✓
MIRRORS	✓	ENGINE OIL	Add/Check
DEFROSTER	✓	EXHAUST SYSTEM	✓
STEERING SYSTEM	✓	FLUID LEVELS	✓
WIRE ROPE	N/A	MAINTAINENCE MANUALS	✓
APPEARANCE	✓	OPERATING MANUALS	✓
ELECTRICAL SYSTEM	✓	LOAD CHARTS	✓
INSPECTOR:	[signature]	DATE:	1-12-95
APPROVED:	[signature] (HEALTH &SAFETY)	DATE:	1-15/95
PHOTOGRAPHS TAKEN			

IT CORPORATION

PROJECT

EQUIPMENT INSPECTION LOG

Equipment Type: 966

Equipment Supplier: S.S.S

I.D. #: 966

Date: 1-12-95

BRAKES	✓	COOLING WATER	✓
AIR SYSTEM	✓	OPERATING CONTROLS	✓
TIRES/TRACKS	✓	LIGHTS/REFLECTORS	✓
HORN	✓	WINDSHIELD WIPERS	✓
SAFETY DEVICES	✓	FIRE EXTINGUISHER	✓
GLASS	✓	BACKUP ALARM	✓
MIRRORS	✓	ENGINE OIL ✓	Add/Check
DEFROSTER	✓	EXHAUST SYSTEM	✓
STEERING SYSTEM	✓	FLUID LEVELS	✓
WIRE ROPE	NA	MAINTAINENCE MANUALS	✓
APPEARANCE	✓	OPERATING MANUALS	✓
ELECTRICAL SYSTEM	✓	LOAD CHARTS	—
INSPECTOR:	J Moore	DATE:	1-12-95
APPROVED:	[signature] (HEALTH &SAFETY)	DATE:	1-15-95
PHOTOGRAPHS TAKEN			

IT CORPORATION

PROJECT

EQUIPMENT INSPECTION LOG

Equipment Type: 966

Equipment Supplier: Cat

I.D. #:

Date: 1-12-95

BRAKES	✓	COOLING WATER	✓
AIR SYSTEM	✓	OPERATING CONTROLS	✓
TIRES/TRACKS	✓	LIGHTS/REFLECTORS	✓
HORN	✓	WINDSHIELD WIPERS	✓
SAFETY DEVICES	✓	FIRE EXTINGUISHER	✓
GLASS	✓	BACKUP ALARM	✓
MIRRORS	✓	ENGINE OIL	Add/Check Full
DEFROSTER	✓	EXHAUST SYSTEM	✓
STEERING SYSTEM	✓	FLUID LEVELS	✓
WIRE ROPE	N/A	MAINTAINENCE MANUALS	✓
APPEARANCE	✓	OPERATING MANUALS	✓
ELECTRICAL SYSTEM	✓	LOAD CHARTS	N/A
INSPECTOR:	Thomas Billy	DATE:	1-12-95
APPROVED: (HEALTH &SAFETY)	Hy McElly	DATE:	1/12/95
PHOTOGRAPHS TAKEN			

IT CORPORATION

PROJECT

EQUIPMENT INSPECTION LOG

Equipment Type: 966 loader

Equipment Supplier: CAT

I.D. #: 105500585

Date: 1-12-94

BRAKES	✓	COOLING WATER	✓
AIR SYSTEM	✓	OPERATING CONTROLS	✓
TIRES/TRACKS	✓	LIGHTS/REFLECTORS	✓
HORN	✓	WINDSHIELD WIPERS	✓
SAFETY DEVICES	✓	FIRE EXTINGUISHER	✓
GLASS	✓	BACKUP ALARM	✓
MIRRORS	✓	ENGINE OIL	✓ Add/Check
DEFROSTER	✓	EXHAUST SYSTEM	✓
STEERING SYSTEM	✓	FLUID LEVELS	✓
WIRE ROPE	NA	MAINTAINENCE MANUALS	Parts Manual only
APPEARANCE	Dirty	OPERATING MANUALS	
ELECTRICAL SYSTEM	✓	LOAD CHARTS	
INSPECTOR:	Vince	DATE:	1-12-95
APPROVED: (HEALTH &SAFETY)		DATE:	
PHOTOGRAPHS TAKEN			

IT CORPORATION

PROJECT

EQUIPMENT INSPECTION LOG

Equipment Type: 966F FRONT END LOADER

Equipment Supplier: S.S.S

I.D. #: 966

Date: 1-14-95

BRAKES	✓	COOLING WATER	✓
AIR SYSTEM	✓	OPERATING CONTROLS	✓
TIRES/TRACKS	✓	LIGHTS/REFLECTORS	✓
HORN	✓	WINDSHIELD WIPERS	✓
SAFETY DEVICES	✓	FIRE EXTINGUISHER	✓
GLASS	✓	BACKUP ALARM	
MIRRORS	✓	ENGINE OIL	✓ Add/Check
DEFROSTER	✓	EXHAUST SYSTEM	✓
STEERING SYSTEM	✓	FLUID LEVELS	✓
WIRE ROPE	✓ N/A	MAINTAINENCE MANUALS	✓
APPEARANCE	✓	OPERATING MANUALS	✓
ELECTRICAL SYSTEM	✓	LOAD CHARTS	✓
INSPECTOR:	J Moore	DATE:	1-14-95
APPROVED: (HEALTH &SAFETY)	[signature]	DATE:	1-15-95
PHOTOGRAPHS TAKEN			

IT CORPORATION

PROJECT

EQUIPMENT INSPECTION LOG

Equipment Type: 120 Hoe

Equipment Supplier: SSS

I.D. #: 120

Date: 1-14-95

BRAKES	✓	COOLING WATER	✓
AIR SYSTEM	✓	OPERATING CONTROLS	✓
TIRES/TRACKS	✓	LIGHTS/REFLECTORS	✓
HORN	✓	WINDSHIELD WIPERS	✓
SAFETY DEVICES	✓	FIRE EXTINGUISHER	✓
GLASS	✓	BACKUP ALARM	✓
MIRRORS	✓	ENGINE OIL	✓ Add/Check
DEFROSTER	✓	EXHAUST SYSTEM	✓
STEERING SYSTEM	✓	FLUID LEVELS	✓
WIRE ROPE	N/A	MAINTAINENCE MANUALS	✓
APPEARANCE	✓	OPERATING MANUALS	✓
ELECTRICAL SYSTEM	✓	LOAD CHARTS	✓
INSPECTOR:	E. Fleming	DATE:	1-14-95
APPROVED: (HEALTH &SAFETY)	[signature]	DATE:	1-15-95
PHOTOGRAPHS TAKEN			

IT CORPORATION

PROJECT

EQUIPMENT INSPECTION LOG

Equipment Type: 120 BH

Equipment Supplier: S.S.

I.D. #:

Date: 1-15-95

BRAKES	✓	COOLING WATER	✓
AIR SYSTEM	✓	OPERATING CONTROLS	✓
TIRES/TRACKS	✓	LIGHTS/REFLECTORS	✓
HORN	✓	WINDSHIELD WIPERS	✓
SAFETY DEVICES	✓	FIRE EXTINGUISHER	✓
GLASS	✓	BACKUP ALARM	✓
MIRRORS	✓	ENGINE OIL ✓	Add/Check
DEFROSTER	✓	EXHAUST SYSTEM	✓
STEERING SYSTEM	✓	FLUID LEVELS	✓
WIRE ROPE	NA	MAINTAINENCE MANUALS	✓
APPEARANCE	✓	OPERATING MANUALS	✓
ELECTRICAL SYSTEM	✓	LOAD CHARTS	✓
INSPECTOR:	Ed Fleming	DATE:	1-15-95
APPROVED: (HEALTH &SAFETY)	[illegible]	DATE:	1-19-95
PHOTOGRAPHS TAKEN			

IT CORPORATION

PROJECT

EQUIPMENT INSPECTION LOG

Equipment Type: 120 TH

Equipment Supplier: SS

I.D. #:

Date: 1-16-95

BRAKES	✓	COOLING WATER	✓
AIR SYSTEM	✓	OPERATING CONTROLS	✓
TIRES/TRACKS	✓	LIGHTS/REFLECTORS	✓
HORN	✓	WINDSHIELD WIPERS	✓
SAFETY DEVICES	✓	FIRE EXTINGUISHER	✓
GLASS	✓	BACKUP ALARM	✓
MIRRORS	✓	ENGINE OIL	Add/Check
DEFROSTER	✓	EXHAUST SYSTEM	✓
STEERING SYSTEM	✓	FLUID LEVELS	✓
WIRE ROPE	N/A	MAINTAINENCE MANUALS	✓
APPEARANCE	✓	OPERATING MANUALS	✓
ELECTRICAL SYSTEM	✓	LOAD CHARTS	✓
INSPECTOR:		DATE:	1-16-95
APPROVED: (HEALTH &SAFETY)		DATE:	1-19-95
PHOTOGRAPHS TAKEN			

IT CORPORATION

PROJECT

EQUIPMENT INSPECTION LOG

Equipment Type: IT28

Equipment Supplier: SS

I.D. #:

Date: 1-16-95

BRAKES ✓	COOLING WATER ✓
AIR SYSTEM ✓	OPERATING CONTROLS ✓
TIRES/TRACKS ✓	LIGHTS/REFLECTORS ✓
HORN ✓	WINDSHIELD WIPERS ✓
SAFETY DEVICES ✓	FIRE EXTINGUISHER ✓
GLASS cracked front windshield	BACKUP ALARM ✓
MIRRORS ✓	ENGINE OIL Add/Check ✓
DEFROSTER ✓	EXHAUST SYSTEM ✓
STEERING SYSTEM ✓	FLUID LEVELS ✓
WIRE ROPE ✓	MAINTAINENCE MANUALS ✓
APPEARANCE ✓	OPERATING MANUALS ✓
ELECTRICAL SYSTEM ✓	LOAD CHARTS ✓
INSPECTOR: [signature]	DATE: 1-16-95
APPROVED: [signature] (HEALTH &SAFETY)	DATE: 1-19-95
PHOTOGRAPHS TAKEN	

IT CORPORATION

PROJECT

EQUIPMENT INSPECTION LOG

Equipment Type: D3C Dozer

Equipment Supplier: SS

I.D. #:

Date: 1-16-95

BRAKES	✓	COOLING WATER	✓
AIR SYSTEM	✓	OPERATING CONTROLS	✓
TIRES/TRACKS	✓	LIGHTS/REFLECTORS	✓
HORN	✓	WINDSHIELD WIPERS	N/A
SAFETY DEVICES	✓	FIRE EXTINGUISHER	✓
GLASS	✓	BACKUP ALARM	✓
MIRRORS	✓	ENGINE OIL Add/Check	✓
DEFROSTER	N/A	EXHAUST SYSTEM	✓
STEERING SYSTEM	✓	FLUID LEVELS	✓
WIRE ROPE	✓	MAINTAINENCE MANUALS	✓
APPEARANCE	✓	OPERATING MANUALS	✓
ELECTRICAL SYSTEM	✓	LOAD CHARTS	
INSPECTOR: Michael Stark		DATE: 1-16-95	
APPROVED: [illegible] (HEALTH &SAFETY)		DATE: 1-19-95	
PHOTOGRAPHS TAKEN			

IT CORPORATION

PROJECT

EQUIPMENT INSPECTION LOG

Equipment Type: 966

Equipment Supplier: SS

I.D. #:

Date: 1-16-95

BRAKES ✓	COOLING WATER ✓
AIR SYSTEM ✓	OPERATING CONTROLS ✓
TIRES/TRACKS ✓	LIGHTS/REFLECTORS ✓
HORN ✓	WINDSHIELD WIPERS ✓
SAFETY DEVICES ✓	FIRE EXTINGUISHER ✓
GLASS ✓	BACKUP ALARM ✓
MIRRORS ✓	ENGINE OIL Add/Check ✓
DEFROSTER ✓	EXHAUST SYSTEM ✓
STEERING SYSTEM ✓	FLUID LEVELS ✓
WIRE ROPE ✓	MAINTAINENCE MANUALS ✓
APPEARANCE ✓	OPERATING MANUALS ✓
ELECTRICAL SYSTEM ✓	LOAD CHARTS ✓
INSPECTOR: Pete Claud	DATE: 1-16-95
APPROVED: [signature] (HEALTH &SAFETY)	DATE: 1-19-95
PHOTOGRAPHS TAKEN	

IT CORPORATION

PROJECT

EQUIPMENT INSPECTION LOG

Equipment Type: 120 ~~5~~ H

Equipment Supplier: SS.

I.D. #:

Date: 1-17-95

BRAKES	✓	COOLING WATER	✓
AIR SYSTEM	✓	OPERATING CONTROLS	✓
TIRES/TRACKS	✓	LIGHTS/REFLECTORS	✓
HORN	✓	WINDSHIELD WIPERS	~~N/A~~ ✓
SAFETY DEVICES	✓	FIRE EXTINGUISHER	✓
GLASS	✓	BACKUP ALARM	✓
MIRRORS	✓	ENGINE OIL	Add/Check
DEFROSTER	✓	EXHAUST SYSTEM	✓
STEERING SYSTEM	✓	FLUID LEVELS	✓
WIRE ROPE	N/A	MAINTAINENCE MANUALS	✓
APPEARANCE	✓	OPERATING MANUALS	✓
ELECTRICAL SYSTEM	✓	LOAD CHARTS	✓
INSPECTOR:	Ed [illegible]	DATE:	1-17-95
APPROVED:	[illegible] (HEALTH & SAFETY)	DATE:	1-19-95
PHOTOGRAPHS TAKEN			

IT CORPORATION

PROJECT

EQUIPMENT INSPECTION LOG

Equipment Type: LOADER

Equipment Supplier: S.S.S.

I.D. #: 18

Date: 1-17-95

BRAKES	✓	COOLING WATER	✓
AIR SYSTEM	✓	OPERATING CONTROLS	✓
TIRES/TRACKS	✓	LIGHTS/REFLECTORS	✓
HORN	✓	WINDSHIELD WIPERS	✓
SAFETY DEVICES	✓	FIRE EXTINGUISHER	✓
GLASS	✓	BACKUP ALARM	✓
MIRRORS	✓	ENGINE OIL	Add/Check
DEFROSTER	✓	EXHAUST SYSTEM	✓
STEERING SYSTEM	✓	FLUID LEVELS	✓
WIRE ROPE	N/A	MAINTAINENCE MANUALS	✓
APPEARANCE	✓	OPERATING MANUALS	✓
ELECTRICAL SYSTEM	✓	LOAD CHARTS	✓
INSPECTOR:		DATE: 1-17-95	
APPROVED: (HEALTH &SAFETY)		DATE: 1-19-95	
PHOTOGRAPHS TAKEN			

IT CORPORATION

PROJECT

EQUIPMENT INSPECTION LOG

Equipment Type: 966 Loader

Equipment Supplier: SS

I.D. #:

Date: 1-18-95

BRAKES	✓	COOLING WATER	✓
AIR SYSTEM	✓	OPERATING CONTROLS	✓
TIRES/TRACKS	✓	LIGHTS/REFLECTORS	✓
HORN	✓	WINDSHIELD WIPERS	✓
SAFETY DEVICES	✓	FIRE EXTINGUISHER	✓
GLASS	✓	BACKUP ALARM	✓
MIRRORS	✓	ENGINE OIL	✓ Add/Check
DEFROSTER	✓	EXHAUST SYSTEM	✓
STEERING SYSTEM	✓	FLUID LEVELS	✓
WIRE ROPE	✓	MAINTAINENCE MANUALS	✓
APPEARANCE	✓	OPERATING MANUALS	✓
ELECTRICAL SYSTEM	✓	LOAD CHARTS	✓
INSPECTOR:	F. Moore	DATE:	1-18-95
APPROVED:	[signature] (HEALTH & SAFETY)	DATE:	1-19-95

PHOTOGRAPHS TAKEN

IT CORPORATION

PROJECT

EQUIPMENT INSPECTION LOG

Equipment Type: 12C TH

Equipment Supplier: S.S

I.D. #:

Date: 1-18-95

BRAKES	✓	COOLING WATER	✓
AIR SYSTEM	✓	OPERATING CONTROLS	✓
TIRES/TRACKS	✓	LIGHTS/REFLECTORS	✓
HORN	✓	WINDSHIELD WIPERS	✓
SAFETY DEVICES	✓	FIRE EXTINGUISHER	✓
GLASS	✓	BACKUP ALARM	✓
MIRRORS	✓	ENGINE OIL	✓ Add/Check
DEFROSTER	✓	EXHAUST SYSTEM	✓
STEERING SYSTEM	✓	FLUID LEVELS	✓
WIRE ROPE	✓	MAINTAINENCE MANUALS	✓
APPEARANCE	✓	OPERATING MANUALS	✓
ELECTRICAL SYSTEM	✓	LOAD CHARTS	✓
INSPECTOR:	[signature]	DATE:	1-16-95
APPROVED:	[signature] (HEALTH & SAFETY)	DATE:	2-29-95

PHOTOGRAPHIC TAKEN

IT CORPORATION

PROJECT

EQUIPMENT INSPECTION LOG

Equipment Type: FRONT END LOADER

Equipment Supplier: CAT

ID #: IT 18 F

Date: 1/18/95

BRAKES	✓	COOLING WATER	✓
AIR SYSTEM	✓	OPERATING CONTROLS	✓
TIRES/TRACKS	✓	LIGHTS/REFLECTORS	✓
HORN	✓	WINDSHIELD WIPERS	✓
SAFETY DEVICES	✓	FIRE EXTINGUISHER	✓
GAUGES	✓	BACKUP ALARM	✓
HYDRAULIC	✓	ENGINE OIL ✓	Add/Check
UNDERCARRIAGE	✓	EXHAUST SYSTEM ✓	
STEERING SYSTEM	✓	FLUID LEVELS ✓	
WIRE ROPE	N/A	MAINTAINENCE MANUALS ✓	
APPEARANCE	✓	OPERATING MANUALS ✓	
ELECTRICAL SYSTEM	✓	LOAD CHARTS ✓	
INSPECTOR: RM Folsom RM Folsom		DATE: 1/18/95	
APPROVED: (HEALTH & SAFETY)		DATE: 1-19-95	
PHOTOGRAPHS TAKEN			

IT CORPORATION

PROJECT

EQUIPMENT INSPECTION LOG

Equipment Type: FRONT END LOADER

Equipment Supplier: CATERPILLAR

I.D. #: IT28F

Date: 1/18/95

BRAKES	✓	COOLING WATER	✓
FUEL SYSTEM	✓	OPERATING CONTROLS	✓
TIRES/TRACKS	✓	LIGHTS/REFLECTORS	✓
HORN	✓	WINDSHIELD WIPERS	✓
SAFETY DEVICES	✓	FIRE EXTINGUISHER	✓
GLASS	✓	BACKUP ALARM	✓
MIRRORS	✓	ENGINE OIL	✓ Add/Check
DEFROSTER	✓	EXHAUST SYSTEM	✓
STEERING SYSTEM	✓	FLUID LEVELS	✓
WIRE ROPE	N/A	MAINTAINENCE MANUALS	✓
APPEARANCE	✓	OPERATING MANUALS	✓
ELECTRICAL SYSTEM	✓	LOAD CHARTS	✓
INSPECTOR:	K.M. Folsum K.M. Folsum	DATE:	1/18/95
APPROVED:	[illegible] (HEALTH & SAFETY)	DATE:	1/19/95

PHOTOGRAPHS TAKEN

IT CORPORATION

PROJECT

EQUIPMENT INSPECTION LOG

Equipment Type: 120 TH

Equipment Supplier: S.S.

I.D. #:

Date: 1-19-95

BRAKES	✓	COOLING WATER	✓
AIR SYSTEM	✓	OPERATING CONTROLS	✓
TIRES/TRACKS	✓	LIGHTS/REFLECTORS	✓
HORN	✓	WINDSHIELD WIPERS	✓
SAFETY DEVICES	✓	FIRE EXTINGUISHER	✓
GLASS	✓	BACKUP ALARM	✓
MIRRORS	✓	ENGINE OIL	Add/Check
DEFROSTER	✓	EXHAUST SYSTEM	✓
STEERING SYSTEM	✓	FLUID LEVELS	✓
WIRE ROPE	NA	MAINTAINENCE MANUALS	✓
APPEARANCE	✓	OPERATING MANUALS	✓
ELECTRICAL SYSTEM	✓	LOAD CHARTS	✓
INSPECTOR:	Ed X	DATE:	1-19-95
APPROVED:	Gy McCly (HEALTH &SAFETY)	DATE:	1/25/95
PHOTOGRAPHS TAKEN			

IT CORPORATION

PROJECT

EQUIPMENT INSPECTION LOG

Equipment Type: Loader

Equipment Supplier: S.S.S.

I.D. #: 966

Date: 1-19-95

BRAKES	✓	COOLING WATER	✓
AIR SYSTEM	✓	OPERATING CONTROLS	✓
TIRES/TRACKS	✓	LIGHTS/REFLECTORS	✓
HORN	✓	WINDSHIELD WIPERS	✓
SAFETY DEVICES	✓	FIRE EXTINGUISHER	✓
GLASS	✓	BACKUP ALARM	✓
MIRRORS	✓	ENGINE OIL	Add/Check
DEFROSTER	✓	EXHAUST SYSTEM	✓
STEERING SYSTEM	✓	FLUID LEVELS	✓
WIRE ROPE	N/A	MAINTAINENCE MANUALS	✓
APPEARANCE	✓	OPERATING MANUALS	✓
ELECTRICAL SYSTEM	✓	LOAD CHARTS	✓
INSPECTOR:	[signature]	DATE:	1-19-95
APPROVED: (HEALTH &SAFETY)	[signature]	DATE:	1-25-95
PHOTOGRAPHS TAKEN			

IT CORPORATION

PROJECT

EQUIPMENT INSPECTION LOG

Equipment Type: DOZER

Equipment Supplier: S.S.S

I.D. #: D. C. 3.

Date: 1-20-95

BRAKES	✓	COOLING WATER	✓
AIR SYSTEM	✓	OPERATING CONTROLS	✓
TIRES/TRACKS	✓	LIGHTS/REFLECTORS	✓
HORN	✓	WINDSHIELD WIPERS	✓
SAFETY DEVICES	✓	FIRE EXTINGUISHER	✓
GLASS	✓	BACKUP ALARM	✓
MIRRORS	✓	ENGINE OIL	Add/Check
DEFROSTER	✓	EXHAUST SYSTEM	✓
STEERING SYSTEM	✓	FLUID LEVELS	✓
WIRE ROPE	n/a	MAINTAINENCE MANUALS	✓
APPEARANCE	✓	OPERATING MANUALS	✓
ELECTRICAL SYSTEM	✓	LOAD CHARTS	✓
INSPECTOR:	[signature]	DATE:	1-20-95
APPROVED: (HEALTH &SAFETY)	By MSG	DATE:	1-25/95
PHOTOGRAPHS TAKEN			

IT CORPORATION

PROJECT

EQUIPMENT INSPECTION LOG

Equipment Type: LOADER

Equipment Supplier: S.S.S.

I.D. #: 966

Date: 1-21-95

BRAKES	✓	COOLING WATER	✓
AIR SYSTEM	✓	OPERATING CONTROLS	✓
TIRES/TRACKS	✓	LIGHTS/REFLECTORS	✓
HORN	✓	WINDSHIELD WIPERS	✓
SAFETY DEVICES	✓	FIRE EXTINGUISHER	✓
GLASS	✓	BACKUP ALARM	✓
MIRRORS	✓	ENGINE OIL	Add/Check ✓
DEFROSTER	✓	EXHAUST SYSTEM	✓
STEERING SYSTEM	✓	FLUID LEVELS	✓
WIRE ROPE	n/a	MAINTAINENCE MANUALS	✓
APPEARANCE	✓	OPERATING MANUALS	✓
ELECTRICAL SYSTEM	✓	LOAD CHARTS	✓
INSPECTOR: [signature]		DATE: 1-21-95	
APPROVED: [signature] (HEALTH &SAFETY)		DATE: 1-25-95	
PHOTOGRAPHS TAKEN			

IT CORPORATION

PROJECT

EQUIPMENT INSPECTION LOG

Equipment Type: IT 18F

Equipment Supplier: S.S.S.

I.D. #: IT 18F

Date: 1-21-95

BRAKES	✓	COOLING WATER	✓
AIR SYSTEM	✓	OPERATING CONTROLS	✓
TIRES/TRACKS	✓	LIGHTS/REFLECTORS	✓
HORN	✓	WINDSHIELD WIPERS	✓
SAFETY DEVICES	✓	FIRE EXTINGUISHER	✓
GLASS	✓	BACKUP ALARM	✓
MIRRORS	✓	ENGINE OIL ✓	(Add) Check 1 qt
DEFROSTER	✓	EXHAUST SYSTEM	✓
STEERING SYSTEM	✓	FLUID LEVELS	✓
WIRE ROPE	N/A	MAINTAINENCE MANUALS	✓
APPEARANCE	✓	OPERATING MANUALS	✓
ELECTRICAL SYSTEM	✓	LOAD CHARTS	✓
INSPECTOR:	F. Moore	DATE:	1-21-95
APPROVED:	Jy McEly (HEALTH &SAFETY)	DATE:	1-25-95
PHOTOGRAPHS TAKEN			

IT CORPORATION

PROJECT

EQUIPMENT INSPECTION LOG

Equipment Type: LOADER

Equipment Supplier: S.S.S.

I.D. #: 18

Date: 1-22-95

BRAKES	✓	COOLING WATER	✓
AIR SYSTEM	✓	OPERATING CONTROLS	✓
TIRES/TRACKS	✓	LIGHTS/REFLECTORS	✓
HORN	✓	WINDSHIELD WIPERS	✓
SAFETY DEVICES	✓	FIRE EXTINGUISHER	✓
GLASS	✓	BACKUP ALARM	✓
MIRRORS	✓	ENGINE OIL	Add/Check
DEFROSTER	✓	EXHAUST SYSTEM	✓
STEERING SYSTEM	✓	FLUID LEVELS	✓
WIRE ROPE	n/a	MAINTAINENCE MANUALS	✓
APPEARANCE	✓	OPERATING MANUALS	✓
ELECTRICAL SYSTEM	✓	LOAD CHARTS	✓
INSPECTOR:	[illegible]	DATE:	1-22-95
APPROVED:	[illegible] (HEALTH &SAFETY)	DATE:	1-25-95
PHOTOGRAPHS TAKEN			

IT CORPORATION

PROJECT

EQUIPMENT INSPECTION LOG

Equipment Type: DOZER

Equipment Supplier: S.S.S.

I.D. #: DC3

Date: 1-23-95

BRAKES ✓	COOLING WATER ✓
AIR SYSTEM ✓	OPERATING CONTROLS ✓
TIRES/TRACKS ✓	LIGHTS/REFLECTORS ✓
HORN ✓	WINDSHIELD WIPERS ✓
SAFETY DEVICES ✓	FIRE EXTINGUISHER ✓
GLASS ✓	BACKUP ALARM ✓
MIRRORS ✓	ENGINE OIL Add/Check
DEFROSTER ✓	EXHAUST SYSTEM ✓
STEERING SYSTEM ✓	FLUID LEVELS ✓
WIRE ROPE N/A	MAINTAINENCE MANUALS ✓
APPEARANCE ✓	OPERATING MANUALS ✓
ELECTRICAL SYSTEM ✓	LOAD CHARTS ✓
INSPECTOR: [signature]	DATE: 1-23-95
APPROVED: [signature] (HEALTH &SAFETY)	DATE: 1-25-95
PHOTOGRAPHS TAKEN	

IT CORPORATION

PROJECT

EQUIPMENT INSPECTION LOG

Equipment Type: 120E Track Hoe

Equipment Supplier: SS

I.D. #:

Date: 1-24-95

BRAKES	✓	COOLING WATER	✓
AIR SYSTEM	✓	OPERATING CONTROLS	✓
TIRES/TRACKS	✓	LIGHTS/REFLECTORS	✓
HORN	✓	WINDSHIELD WIPERS	✓
SAFETY DEVICES	✓	FIRE EXTINGUISHER	✓
GLASS	✓	BACKUP ALARM	✓
MIRRORS	✓	ENGINE OIL	Add/Check ✓
DEFROSTER	✓	EXHAUST SYSTEM	✓
STEERING SYSTEM	✓	FLUID LEVELS	✓
WIRE ROPE		MAINTAINENCE MANUALS	✓
APPEARANCE	✓	OPERATING MANUALS	✓
ELECTRICAL SYSTEM	✓	LOAD CHARTS	
INSPECTOR: [signature]		DATE: 1-24-95	
APPROVED: [signature] (HEALTH &SAFETY)		DATE: 1-28-95	
PHOTOGRAPHS TAKEN			

IT CORPORATION

PROJECT

EQUIPMENT INSPECTION LOG

Equipment Type: DOZER

Equipment Supplier: S.S.S.

I.D. #: DC3

Date: 1-24-95

BRAKES	✓	COOLING WATER	✓
AIR SYSTEM	✓	OPERATING CONTROLS	✓
TIRES/TRACKS	✓	LIGHTS/REFLECTORS	✓
HORN	✓	WINDSHIELD WIPERS	✓
SAFETY DEVICES	✓	FIRE EXTINGUISHER	✓
GLASS	✓	BACKUP ALARM	✓
MIRRORS	✓	ENGINE OIL	Add/Check
DEFROSTER	✓	EXHAUST SYSTEM	✓
STEERING SYSTEM	✓	FLUID LEVELS	✓
WIRE ROPE	✓ N/A	MAINTAINENCE MANUALS	✓
APPEARANCE	✓	OPERATING MANUALS	✓
ELECTRICAL SYSTEM	✓	LOAD CHARTS	✓
INSPECTOR:	[signature]	DATE:	1-24-95
APPROVED: (HEALTH &SAFETY)	[signature]	DATE:	1-28-95
PHOTOGRAPHS TAKEN			

IT CORPORATION

PROJECT

EQUIPMENT INSPECTION LOG

Equipment Type: FRONT END LOADER

Equipment Supplier: CAT

I.D. #: 966 F

Date: 1/24/95

BRAKES	✓	COOLING WATER	✓
AIR SYSTEM	✓	OPERATING CONTROLS	✓
TIRES/TRACKS	✓	LIGHTS/REFLECTORS	✓
HORN	✓	WINDSHIELD WIPERS	✓
SAFETY DEVICES	✓	FIRE EXTINGUISHER	✓
GLASS	✓	BACKUP ALARM	✓
MIRRORS	✓	ENGINE OIL ✓ Add/Check	
DEFROSTER	✓	EXHAUST SYSTEM	✓
STEERING SYSTEM	✓	FLUID LEVELS	✓
WIRE ROPE	N/A	MAINTAINENCE MANUALS	✓
APPEARANCE	✓	OPERATING MANUALS	✓
ELECTRICAL SYSTEM	✓	LOAD CHARTS	✓
INSPECTOR:	R.M. Folsum R.M. Folsum	DATE:	1/24/95
APPROVED:	Jy McEy (HEALTH &SAFETY)	DATE:	1-28/95
PHOTOGRAPHS TAKEN			

IT CORPORATION

PROJECT

EQUIPMENT INSPECTION LOG

Equipment Type: LOADER

Equipment Supplier: S.S.S.

I.D. #: 18

Date: 1-25-95

BRAKES	✓	COOLING WATER	✓
AIR SYSTEM	✓	OPERATING CONTROLS	✓
TIRES/TRACKS	✓	LIGHTS/REFLECTORS	✓
HORN	✓	WINDSHIELD WIPERS	✓
SAFETY DEVICES	✓	FIRE EXTINGUISHER	✓
GLASS	✓	BACKUP ALARM	✓
MIRRORS	✓	ENGINE OIL	Add/Check 1 qt
DEFROSTER	✓	EXHAUST SYSTEM	✓
STEERING SYSTEM	✓	FLUID LEVELS	✓
WIRE ROPE	N/A	MAINTAINENCE MANUALS	✓
APPEARANCE	✓	OPERATING MANUALS	✓
ELECTRICAL SYSTEM	✓	LOAD CHARTS	✓
INSPECTOR:	[signature]	DATE:	1-25-95
APPROVED: (HEALTH &SAFETY)	[signature]	DATE:	1-28-95
PHOTOGRAPHS TAKEN			

IT CORPORATION

PROJECT

EQUIPMENT INSPECTION LOG

Equipment Type: Loader

Equipment Supplier: S.S.S.

I.D. #: 28

Date: 1-25-95

BRAKES	✓	COOLING WATER	✓
AIR SYSTEM	✓	OPERATING CONTROLS	✓
TIRES/TRACKS	✓	LIGHTS/REFLECTORS	✓
HORN	✓	WINDSHIELD WIPERS	✓
SAFETY DEVICES	✓	FIRE EXTINGUISHER	✓
GLASS	✓	BACKUP ALARM	✓
MIRRORS	✓	ENGINE OIL	Add/Check 1 qt
DEFROSTER	✓	EXHAUST SYSTEM	✓
STEERING SYSTEM	✓	FLUID LEVELS	✓
WIRE ROPE	N/A	MAINTAINENCE MANUALS	✓
APPEARANCE	✓	OPERATING MANUALS	✓
ELECTRICAL SYSTEM	✓	LOAD CHARTS	✓
INSPECTOR:	[signature]	DATE:	1-25-95
APPROVED: (HEALTH &SAFETY)	[signature]	DATE:	1-28-95
PHOTOGRAPHS TAKEN			

IT CORPORATION

PROJECT

EQUIPMENT INSPECTION LOG

Equipment Type: LOADER

Equipment Supplier: S.S.S.

I.D. #: 66

Date: 1-25-95

BRAKES	✓	COOLING WATER	✓
AIR SYSTEM	✓	OPERATING CONTROLS	✓
TIRES/TRACKS	✓	LIGHTS/REFLECTORS	✓
HORN	✓	WINDSHIELD WIPERS	✓
SAFETY DEVICES	✓	FIRE EXTINGUISHER	✓
GLASS	✓	BACKUP ALARM	✓
MIRRORS	✓	ENGINE OIL	Add/Check ✓
DEFROSTER	✓	EXHAUST SYSTEM	✓
STEERING SYSTEM	✓	FLUID LEVELS	✓
WIRE ROPE	N/A	MAINTAINENCE MANUALS	✓
APPEARANCE	✓	OPERATING MANUALS	✓
ELECTRICAL SYSTEM	✓	LOAD CHARTS	✓
INSPECTOR:	[signature]	DATE:	1-25-95
APPROVED: (HEALTH &SAFETY)	[signature]	DATE:	1-28-95
PHOTOGRAPHS TAKEN			

IT CORPORATION

PROJECT

EQUIPMENT INSPECTION LOG

Equipment Type: 120E Track Hoe

Equipment Supplier: SS

I.D. #:

Date: 1-25-95

BRAKES	✓	COOLING WATER	✓
AIR SYSTEM	✓	OPERATING CONTROLS	✓
TIRES/TRACKS	✓	LIGHTS/REFLECTORS	✓
HORN	✓	WINDSHIELD WIPERS	✓
SAFETY DEVICES	✓	FIRE EXTINGUISHER	✓
GLASS	✓	BACKUP ALARM	✓
MIRRORS	✓	ENGINE OIL Add/Check	✓
DEFROSTER	✓	EXHAUST SYSTEM	✓
STEERING SYSTEM	✓	FLUID LEVELS	✓
WIRE ROPE	✓	MAINTAINENCE MANUALS	✓
APPEARANCE	✓	OPERATING MANUALS	✓
ELECTRICAL SYSTEM	✓	LOAD CHARTS	✓
INSPECTOR: [signature]		DATE: 1-25-95	
APPROVED: [signature] (HEALTH &SAFETY)		DATE: 1-25-95	
PHOTOGRAPHS TAKEN			

IT CORPORATION

PROJECT

EQUIPMENT INSPECTION LOG

Equipment Type: TT28 Hours 554.0

Equipment Supplier: SS.

I.D. #:

Date: 1-27-95

BRAKES	✓	COOLING WATER	✓
AIR SYSTEM	✓	OPERATING CONTROLS	✓
TIRES/TRACKS	✓	LIGHTS/REFLECTORS	✓
HORN	✓	WINDSHIELD WIPERS	✓
SAFETY DEVICES	✓	FIRE EXTINGUISHER	✓
GLASS	L.S. Front Bad	BACKUP ALARM	✓
MIRRORS	✓	ENGINE OIL	1 qt Add/Check
DEFROSTER	✓	EXHAUST SYSTEM	✓
STEERING SYSTEM	✓	FLUID LEVELS	✓
WIRE ROPE	NA	MAINTAINENCE MANUALS	✓
APPEARANCE	✓	OPERATING MANUALS	✓
ELECTRICAL SYSTEM	✓	LOAD CHARTS	✓
INSPECTOR:	PCopeland	DATE:	1-27-95
APPROVED: (HEALTH &SAFETY)	[illegible]	DATE:	1-28/95
PHOTOGRAPHS TAKEN			

IT CORPORATION

PROJECT

EQUIPMENT INSPECTION LOG

Equipment Type: IT 18 Hours 004166

Equipment Supplier: S.S.

I.D. #:

Date: 1-27-95

BRAKES	✓	COOLING WATER	✓
AIR SYSTEM	✓	OPERATING CONTROLS	✓
TIRES/TRACKS	✓	LIGHTS/REFLECTORS	✓
HORN	✓	WINDSHIELD WIPERS	✓
SAFETY DEVICES	✓	FIRE EXTINGUISHER	✓
GLASS	✓	BACKUP ALARM	✓
MIRRORS	✓	ENGINE OIL ✓	Add/Check
DEFROSTER	✓	EXHAUST SYSTEM	✓
STEERING SYSTEM	✓	FLUID LEVELS	✓
WIRE ROPE	NA	MAINTAINENCE MANUALS	✓
APPEARANCE	✓	OPERATING MANUALS	✓
ELECTRICAL SYSTEM	✓	LOAD CHARTS	✓
INSPECTOR:	[illegible]	DATE:	1-27-95
APPROVED: (HEALTH &SAFETY)	[illegible]	DATE:	1-28-95
PHOTOGRAPHS TAKEN			

IT CORPORATION

PROJECT

EQUIPMENT INSPECTION LOG

Equipment Type: 966 Hoyes 662

Equipment Supplier: SS.

I.D. #:

Date: 1-27-95

BRAKES	✓	COOLING WATER	✓
AIR SYSTEM	✓	OPERATING CONTROLS	✓
TIRES/TRACKS	✓	LIGHTS/REFLECTORS	✓
HORN	✓	WINDSHIELD WIPERS	✓
SAFETY DEVICES	✓	FIRE EXTINGUISHER	✓
GLASS	✓	BACKUP ALARM	✓
MIRRORS	✓	ENGINE OIL	Add/Check
DEFROSTER	✓	EXHAUST SYSTEM	✓
STEERING SYSTEM	✓	FLUID LEVELS	✓
WIRE ROPE	NA	MAINTAINENCE MANUALS	✓
APPEARANCE	✓	OPERATING MANUALS	✓
ELECTRICAL SYSTEM	✓	LOAD CHARTS	✓
INSPECTOR:	R. Folsom	DATE:	1-27-95
APPROVED:	[signature] (HEALTH &SAFETY)	DATE:	1-28-95
PHOTOGRAPHS TAKEN			

966

IT CORPORATION

PROJECT

EQUIPMENT INSPECTION LOG

Equipment Type: 120 TH Hours-5750

Equipment Supplier: S.S.

I.D. #:

Date: 1-27-95

BRAKES	✓	COOLING WATER	✓
AIR SYSTEM	✓	OPERATING CONTROLS	✓
TIRES/TRACKS	✓	LIGHTS/REFLECTORS	✓
HORN	✓	WINDSHIELD WIPERS	✓
SAFETY DEVICES	✓	FIRE EXTINGUISHER	✓
GLASS	✓	BACKUP ALARM	✓
MIRRORS	✓	ENGINE OIL	Add/Check
DEFROSTER	✓	EXHAUST SYSTEM	✓
STEERING SYSTEM	✓	FLUID LEVELS	✓
WIRE ROPE	NA	MAINTAINENCE MANUALS	✓
APPEARANCE	✓	OPERATING MANUALS	✓
ELECTRICAL SYSTEM	✓	LOAD CHARTS	✓
INSPECTOR:	M. Steicklin	DATE:	1-27-95
APPROVED:	Jy MEy (HEALTH &SAFETY)	DATE:	1-28/95
PHOTOGRAPHS TAKEN			

IT CORPORATION

PROJECT

EQUIPMENT INSPECTION LOG

Equipment Type: Dozer Hours - 578

Equipment Supplier: S.S.

I.D. #:

Date: 1-27-95

BRAKES	✓	COOLING WATER	✓
AIR SYSTEM	✓	OPERATING CONTROLS	✓
TIRES/TRACKS	✓	LIGHTS/REFLECTORS	✓
HORN	✓	WINDSHIELD WIPERS	NA
SAFETY DEVICES	✓	FIRE EXTINGUISHER	✓
GLASS	NA	BACKUP ALARM	✓
MIRRORS	✓	ENGINE OIL	Add/Check
DEFROSTER	NA	EXHAUST SYSTEM	✓
STEERING SYSTEM	✓	FLUID LEVELS	✓
WIRE ROPE	NA	MAINTAINENCE MANUALS	✓
APPEARANCE	✓	OPERATING MANUALS	✓
ELECTRICAL SYSTEM	✓	LOAD CHARTS	✓
INSPECTOR:	P. ~~Copeland~~ Copeland	DATE:	1-27-95
APPROVED: (HEALTH &SAFETY)	[illegible]	DATE:	1-28/95
PHOTOGRAPHS TAKEN			

Shaker 324

IT CORPORATION

PROJECT

EQUIPMENT INSPECTION LOG

Equipment Type: Shaker Hours 324

Equipment Supplier:

I.D. #:

Date: 1-27-95

BRAKES ✓	COOLING WATER ✓
AIR SYSTEM N/A	OPERATING CONTROLS ✓
TIRES/TRACKS ✓	LIGHTS/REFLECTORS ✓
HORN NA	WINDSHIELD WIPERS NA
SAFETY DEVICES ✓	FIRE EXTINGUISHER NA
GLASS NA	BACKUP ALARM NA
MIRRORS NA	ENGINE OIL Add/Check
DEFROSTER NA	EXHAUST SYSTEM ✓
STEERING SYSTEM NA	FLUID LEVELS ✓
WIRE ROPE NA	MAINTAINENCE MANUALS ✓
APPEARANCE ✓	OPERATING MANUALS ✓
ELECTRICAL SYSTEM ✓	LOAD CHARTS ✓
INSPECTOR: R. Folsum	DATE: 1-27-94
APPROVED: [signature] (HEALTH &SAFETY)	DATE: 1-28-95
PHOTOGRAPHS TAKEN	

IT CORPORATION

PROJECT

EQUIPMENT INSPECTION LOG

Equipment Type: 120B T.H

Equipment Supplier: SS

I.D. #: CH2 120B

Date: 2/2/95

BRAKES	✓	COOLING WATER	✓
AIR SYSTEM	N/A	OPERATING CONTROLS	✓
TIRES/TRACKS	✓	LIGHTS/REFLECTORS	✓
HORN	✓	WINDSHIELD WIPERS	✓
SAFETY DEVICES	✓	FIRE EXTINGUISHER	✓
GLASS	✓	BACKUP ALARM	✓
MIRRORS	✓	ENGINE OIL	✓ Add/Check
DEFROSTER	✓	EXHAUST SYSTEM	✓
STEERING SYSTEM	✓	FLUID LEVELS	✓
WIRE ROPE	N/A	MAINTAINENCE MANUALS	✓
APPEARANCE	✓	OPERATING MANUALS	✓
ELECTRICAL SYSTEM	✓	LOAD CHARTS	✓
INSPECTOR: Perry Copeland		DATE: 2/2/95	
APPROVED: [illegible] (HEALTH &SAFETY)		DATE: 2/9/95	
PHOTOGRAPHS TAKEN			

IT CORPORATION

PROJECT

EQUIPMENT INSPECTION LOG

Equipment Type: IT 28 F

Equipment Supplier: S.S.S.

I.D. #: IT28F

Date: 2-2-95

BRAKES	✓	COOLING WATER	
AIR SYSTEM	✓	OPERATING CONTROLS	✓
TIRES/TRACKS	✓	LIGHTS/REFLECTORS	✓
HORN	✓	WINDSHIELD WIPERS	✓
SAFETY DEVICES	✓	FIRE EXTINGUISHER	✓
GLASS	✓	BACKUP ALARM	✓
MIRRORS	✓	ENGINE OIL ✓	Add/Check
DEFROSTER	✓	EXHAUST SYSTEM	✓
STEERING SYSTEM	✓	FLUID LEVELS	✓
WIRE ROPE	NA	MAINTAINENCE MANUALS	✓
APPEARANCE	✓	OPERATING MANUALS	✓
ELECTRICAL SYSTEM	✓	LOAD CHARTS	✓
INSPECTOR: F Moore		DATE: 2-2-95	
APPROVED: W a Clar (HEALTH &SAFETY)		DATE: 2/2/95	
PHOTOGRAPHS TAKEN			

IT CORPORATION

PROJECT

EQUIPMENT INSPECTION LOG

Equipment Type: IT 18 F

Equipment Supplier: S.S.S.

I.D. #: IT 18 F

Date: 2-2-95

BRAKES	✓	COOLING WATER	✓
AIR SYSTEM	✓	OPERATING CONTROLS	✓
TIRES/TRACKS	✓	LIGHTS/REFLECTORS	✓
HORN	✓	WINDSHIELD WIPERS	✓
SAFETY DEVICES	✓	FIRE EXTINGUISHER	✓
GLASS	✓	BACKUP ALARM	✓
MIRRORS	✓	ENGINE OIL ✓	Add/Check
DEFROSTER	✓	EXHAUST SYSTEM	✓
STEERING SYSTEM	✓	FLUID LEVELS	✓
WIRE ROPE	N/A	MAINTAINENCE MANUALS	✓
APPEARANCE	✓	OPERATING MANUALS	✓
ELECTRICAL SYSTEM	✓	LOAD CHARTS	✓
INSPECTOR:	J Moore	DATE:	2-2-95
APPROVED: (HEALTH &SAFETY)	[illegible]	DATE:	2/2/95
PHOTOGRAPHS TAKEN			

IT CORPORATION

PROJECT

EQUIPMENT INSPECTION LOG

Equipment Type: IT 966-F

Equipment Supplier: S.S.S

I.D. #: 966

Date: 2-2-95

BRAKES	✓	COOLING WATER	✓
AIR SYSTEM	✓	OPERATING CONTROLS	✓
TIRES/TRACKS	✓	LIGHTS/REFLECTORS	✓
HORN	✓	WINDSHIELD WIPERS	✓
SAFETY DEVICES	✓	FIRE EXTINGUISHER	✓
GLASS	✓	BACKUP ALARM	✓
MIRRORS	✓	ENGINE OIL ✓	Add/Check
DEFROSTER	✓	EXHAUST SYSTEM	✓
STEERING SYSTEM	✓	FLUID LEVELS	✓
WIRE ROPE	NA	MAINTAINENCE MANUALS	✓
APPEARANCE	✓	OPERATING MANUALS	✓
ELECTRICAL SYSTEM	✓	LOAD CHARTS	✓
INSPECTOR: ~~2-2-95~~ F. Moore		DATE: 2-2-95	
APPROVED: W.A. Cl (HEALTH &SAFETY)		DATE: 2/2/95	
PHOTOGRAPHS TAKEN			

IT CORPORATION

PROJECT

EQUIPMENT INSPECTION LOG

Equipment Type: 120B T.H Hrs 402

Equipment Supplier: SS

I.D. #: Cat 120B

Date:

BRAKES	✓	COOLING WATER	✓
AIR SYSTEM	N/A	OPERATING CONTROLS	✓
TIRES/TRACKS	✓	LIGHTS/REFLECTORS	✓
HORN	✓	WINDSHIELD WIPERS	✓
SAFETY DEVICES	✓	FIRE EXTINGUISHER	✓
GLASS	✓	BACKUP ALARM	✓
MIRRORS	✓	ENGINE OIL	✓ Add/Check
DEFROSTER	✓	EXHAUST SYSTEM	✓
STEERING SYSTEM	✓	FLUID LEVELS	✓
WIRE ROPE	N/A	MAINTAINENCE MANUALS	✓
APPEARANCE	✓	OPERATING MANUALS	✓
ELECTRICAL SYSTEM	✓	LOAD CHARTS	✓
INSPECTOR:	[signature]	DATE:	2/3/95
APPROVED:	[signature] (HEALTH &SAFETY)	DATE:	2/3/95
PHOTOGRAPHS TAKEN			

IT CORPORATION

PROJECT

EQUIPMENT INSPECTION LOG

Equipment Type: IT 966F HIS 132.1

Equipment Supplier: S.S.S

I.D. #: 966

Date: 2-3-95

BRAKES	✓	COOLING WATER	✓
AIR SYSTEM	✓	OPERATING CONTROLS	✓
TIRES/TRACKS	✓	LIGHTS/REFLECTORS	✓
HORN	✓	WINDSHIELD WIPERS	✓
SAFETY DEVICES	✓	FIRE EXTINGUISHER	✓
GLASS	✓	BACKUP ALARM	✓
MIRRORS	✓	ENGINE OIL ✓	Add/Check
DEFROSTER	✓	EXHAUST SYSTEM	✓
STEERING SYSTEM	✓	FLUID LEVELS	✓
WIRE ROPE	NA	MAINTAINENCE MANUALS	✓
APPEARANCE	✓	OPERATING MANUALS	✓
ELECTRICAL SYSTEM	✓	LOAD CHARTS	✓
INSPECTOR: 2-3-95		DATE: 2-3-95	
APPROVED: [signature] (HEALTH &SAFETY)		DATE: 2/3/95	
PHOTOGRAPHS TAKEN			

IT CORPORATION

PROJECT

EQUIPMENT INSPECTION LOG

Equipment Type: D5 Dozer

Equipment Supplier: CAT

I.D. #: CAT D5

Date: 2/3/95

BRAKES	✓	COOLING WATER	✓
AIR SYSTEM	N/A	OPERATING CONTROLS	✓
TIRES/TRACKS	✓	LIGHTS/REFLECTORS	✓
HORN	✓	WINDSHIELD WIPERS	N/A
SAFETY DEVICES	✓	FIRE EXTINGUISHER	✓
GLASS	N/A	BACKUP ALARM	✓
MIRRORS	✓	ENGINE OIL ✓ Add/Check	
DEFROSTER	N/A	EXHAUST SYSTEM	✓
STEERING SYSTEM	✓	FLUID LEVELS	Add
WIRE ROPE	N/A	MAINTAINENCE MANUALS	✓
APPEARANCE	✓	OPERATING MANUALS	✓
ELECTRICAL SYSTEM	✓	LOAD CHARTS	
INSPECTOR: Thomas Billy		DATE: 2/3/95	
APPROVED: [illegible] (HEALTH &SAFETY)		DATE: 2/3/95	
PHOTOGRAPHS TAKEN -			

IT CORPORATION

PROJECT

EQUIPMENT INSPECTION LOG

hrs. 00577.7

Equipment Type: IT 28

Equipment Supplier: CAT

I.D. #: CAT IT 28

Date: 2/3/95

BRAKES	✓	COOLING WATER	✓
AIR SYSTEM	✓	OPERATING CONTROLS	✓
TIRES/TRACKS	✓	LIGHTS/REFLECTORS	✓
HORN	✓	WINDSHIELD WIPERS	✓
SAFETY DEVICES	✓	FIRE EXTINGUISHER	✓
GLASS	✓	BACKUP ALARM	✓
MIRRORS	✓	ENGINE OIL	✓ Add/Check
DEFROSTER	✓	EXHAUST SYSTEM	✓
STEERING SYSTEM	✓	FLUID LEVELS	✓
WIRE ROPE	N/A	MAINTAINENCE MANUALS	✓
APPEARANCE	✓	OPERATING MANUALS	✓
ELECTRICAL SYSTEM	✓	LOAD CHARTS	✓
INSPECTOR: [signature]		DATE: 2/3-95	
APPROVED: [signature] (HEALTH &SAFETY)		DATE: 2/3/95	
PHOTOGRAPHS TAKEN			

IT CORPORATION

PROJECT

EQUIPMENT INSPECTION LOG

hrs 007178

Equipment Type: IT 18

Equipment Supplier: CAT

I.D. #: CAT IT 18

Date: 2/3/95

BRAKES	✓	COOLING WATER	✓
AIR SYSTEM	✓	OPERATING CONTROLS	✓
TIRES/TRACKS	✓	LIGHTS/REFLECTORS	✓
HORN	✓	WINDSHIELD WIPERS	✓
SAFETY DEVICES	✓	FIRE EXTINGUISHER	✓
GLASS	✓	BACKUP ALARM	✓
MIRRORS	✓	ENGINE OIL	✓ Add/Check
DEFROSTER	✓	EXHAUST SYSTEM	✓
STEERING SYSTEM	✓	FLUID LEVELS	✓
WIRE ROPE	N/A	MAINTAINENCE MANUALS	✓
APPEARANCE	✓	OPERATING MANUALS	✓
ELECTRICAL SYSTEM	✓	LOAD CHARTS	✓
INSPECTOR:	Thomas R. Eby	DATE:	2/3/95
APPROVED:	[illegible] (HEALTH &SAFETY)	DATE:	2/3/95
PHOTOGRAPHS TAKEN			

IT CORPORATION

PROJECT

EQUIPMENT INSPECTION LOG

Equipment Type: 120 B Track Hoe Hrs-672

Equipment Supplier: SS

I.D. #: CAT 120 B

Date: 2/10/95

BRAKES	✓	COOLING WATER	✓
AIR SYSTEM	N/A	OPERATING CONTROLS	✓
TIRES/TRACKS	✓	LIGHTS/REFLECTORS	✓
HORN	✓	WINDSHIELD WIPERS	✓
SAFETY DEVICES	✓	FIRE EXTINGUISHER	✓
GLASS	✓	BACKUP ALARM	✓
MIRRORS	✓	ENGINE OIL	✓ Add/Check
DEFROSTER	✓	EXHAUST SYSTEM	✓
STEERING SYSTEM	✓	FLUID LEVELS	✓
WIRE ROPE	N/A	MAINTAINENCE MANUALS	✓
APPEARANCE	✓	OPERATING MANUALS	✓
ELECTRICAL SYSTEM	✓	LOAD CHARTS	✓
INSPECTOR:	[signature]	DATE:	2/10/95
APPROVED: (HEALTH &SAFETY)	[signature]	DATE:	2/10/95
PHOTOGRAPHS TAKEN			

IT CORPORATION

PROJECT

EQUIPMENT INSPECTION LOG

Equipment Type: LOADER Hrs - 615

Equipment Supplier: S.S.S.

I.D. #: IT 28F

Date: 2-10-95

BRAKES	✓	COOLING WATER	✓
AIR SYSTEM	✓	OPERATING CONTROLS	✓
TIRES/TRACKS	✓	LIGHTS/REFLECTORS	✓
HORN	✓	WINDSHIELD WIPERS	✓
SAFETY DEVICES	✓	FIRE EXTINGUISHER	✓
GLASS	✓	BACKUP ALARM	✓
MIRRORS	✓	ENGINE OIL ✓	Add/Check
DEFROSTER	✓	EXHAUST SYSTEM	✓
STEERING SYSTEM	✓	FLUID LEVELS	✓
WIRE ROPE	NA	MAINTAINENCE MANUALS	✓
APPEARANCE	✓	OPERATING MANUALS	✓
ELECTRICAL SYSTEM	✓	LOAD CHARTS	✓
INSPECTOR:	J. Moore	DATE:	2-10-95 HOURS - 604.3
APPROVED:	[signature] (HEALTH &SAFETY)	DATE:	2/10/95
PHOTOGRAPHS TAKEN			

IT CORPORATION

PROJECT

EQUIPMENT INSPECTION LOG

Equipment Type: IT 18 LRS. 755-7

Equipment Supplier: CAT

I.D. #: CAT IT 18

Date: 2-10-95

BRAKES	✓	COOLING WATER	✓
AIR SYSTEM	✓	OPERATING CONTROLS	✓
TIRES/TRACKS	✓	LIGHTS/REFLECTORS	✓
HORN	✓	WINDSHIELD WIPERS	✓
SAFETY DEVICES	✓	FIRE EXTINGUISHER	✓
GLASS	✓	BACKUP ALARM	✓
MIRRORS	✓	ENGINE OIL	✓ Add/Check (/)
DEFROSTER	✓	EXHAUST SYSTEM	✓
STEERING SYSTEM	✓	FLUID LEVELS	✓
WIRE ROPE	N/A	MAINTAINENCE MANUALS	✓
APPEARANCE	✓	OPERATING MANUALS	✓
ELECTRICAL SYSTEM	✓	LOAD CHARTS	✓
INSPECTOR:	Thomas Billy	DATE:	2-10-95
APPROVED: (HEALTH &SAFETY)	Dick [illegible]	DATE:	2/10/95
PHOTOGRAPHS TAKEN			

IT CORPORATION

PROJECT

EQUIPMENT INSPECTION LOG

Equipment Type: IT 18

Equipment Supplier: CAT

I.D. #: CAT IT 18

Date: 2-9-95

BRAKES	✓	COOLING WATER	✓
AIR SYSTEM	✓	OPERATING CONTROLS	✓
TIRES/TRACKS	✓	LIGHTS/REFLECTORS	✓
HORN	✓	WINDSHIELD WIPERS	✓
SAFETY DEVICES	✓	FIRE EXTINGUISHER	✓
GLASS	✓	BACKUP ALARM	✓
MIRRORS	✓	ENGINE OIL	✓ Add/Check
DEFROSTER	✓	EXHAUST SYSTEM	✓
STEERING SYSTEM	✓	FLUID LEVELS	✓
WIRE ROPE	N/A	MAINTAINENCE MANUALS	✓
APPEARANCE	✓	OPERATING MANUALS	✓
ELECTRICAL SYSTEM	✓	LOAD CHARTS	✓
INSPECTOR:	Thomas Billy	DATE:	2-9-95
APPROVED: (HEALTH &SAFETY)	Will [illegible]	DATE:	2/9/95
PHOTOGRAPHS TAKEN			

IT CORPORATION

PROJECT

EQUIPMENT INSPECTION LOG

Equipment Type: LOADER

Equipment Supplier: S.S.S.

I.D. #: 28

Date: 2-9-95

BRAKES	✓	COOLING WATER	✓
AIR SYSTEM	✓	OPERATING CONTROLS	✓
TIRES/TRACKS	✓	LIGHTS/REFLECTORS	✓
HORN	✓	WINDSHIELD WIPERS	✓
SAFETY DEVICES	✓	FIRE EXTINGUISHER	✓
GLASS	✓	BACKUP ALARM	✓
MIRRORS	✓	ENGINE OIL	Add/Check
DEFROSTER	✓	EXHAUST SYSTEM	✓
STEERING SYSTEM	✓	FLUID LEVELS	✓
WIRE ROPE	N/A	MAINTAINENCE MANUALS	✓
APPEARANCE	✓	OPERATING MANUALS	✓
ELECTRICAL SYSTEM	✓	LOAD CHARTS	✓
INSPECTOR:	[signature]	DATE:	2-9-95
APPROVED: (HEALTH &SAFETY)	[signature]	DATE:	2/9/95
PHOTOGRAPHS TAKEN			

IT CORPORATION

PROJECT

EQUIPMENT INSPECTION LOG

Equipment Type: Loader

Equipment Supplier: SSS

I.D. #: 28

Date: 2-8-95

BRAKES	✓	COOLING WATER	✓
AIR SYSTEM	✓	OPERATING CONTROLS	✓
TIRES/TRACKS	✓	LIGHTS/REFLECTORS	✓
HORN	✓	WINDSHIELD WIPERS	✓
SAFETY DEVICES	✓	FIRE EXTINGUISHER	✓
GLASS	✓	BACKUP ALARM	✓
MIRRORS	✓	ENGINE OIL	Add/~~Check~~ ✓
DEFROSTER	✓	EXHAUST SYSTEM	✓
STEERING SYSTEM	✓	FLUID LEVELS	✓
WIRE ROPE	∞/12	MAINTAINENCE MANUALS	✓
APPEARANCE	✓	OPERATING MANUALS	✓
ELECTRICAL SYSTEM	✓	LOAD CHARTS	✓
INSPECTOR:	[illegible]	DATE:	2-8-95
APPROVED: (HEALTH &SAFETY)	[illegible]	DATE:	2/8/95
PHOTOGRAPHS TAKEN			

IT CORPORATION

PROJECT

EQUIPMENT INSPECTION LOG

Equipment Type: Loader

Equipment Supplier: S.S.S.

I.D. #: 18

Date: 2-8-95

BRAKES	✓	COOLING WATER	✓
AIR SYSTEM	✓	OPERATING CONTROLS	✓
TIRES/TRACKS	✓	LIGHTS/REFLECTORS	✓
HORN	✓	WINDSHIELD WIPERS	✓
SAFETY DEVICES	✓	FIRE EXTINGUISHER	✓
GLASS	✓	BACKUP ALARM	✓
MIRRORS	✓	ENGINE OIL	Add/Check
DEFROSTER	✓	EXHAUST SYSTEM	✓
STEERING SYSTEM	✓	FLUID LEVELS	✓
WIRE ROPE	N/A	MAINTAINENCE MANUALS	✓
APPEARANCE	✓	OPERATING MANUALS	✓
ELECTRICAL SYSTEM	✓	LOAD CHARTS	✓
INSPECTOR:	[signature]	DATE:	2-8-95
APPROVED: (HEALTH &SAFETY)	[signature]	DATE:	2/8/95
PHOTOGRAPHS TAKEN			

IT CORPORATION

PROJECT

EQUIPMENT INSPECTION LOG

P.C.

Equipment Type: C IT 18 hrs ~~7557~~

Equipment Supplier: CAT

I.D. #: CAT IT 18

Date: 2-11-95

BRAKES	✓	COOLING WATER	✓
AIR SYSTEM	✓	OPERATING CONTROLS	✓
TIRES/TRACKS	✓	LIGHTS/REFLECTORS	✓
HORN	✓	WINDSHIELD WIPERS	✓
SAFETY DEVICES	✓	FIRE EXTINGUISHER	✓
GLASS	✓	BACKUP ALARM	✓
MIRRORS	✓	ENGINE OIL Add/Check	✓
DEFROSTER	✓	EXHAUST SYSTEM	✓
STEERING SYSTEM	✓	FLUID LEVELS	✓
WIRE ROPE	N/A	MAINTAINENCE MANUALS	✓
APPEARANCE	✓	OPERATING MANUALS	✓
ELECTRICAL SYSTEM	✓	LOAD CHARTS	✓
INSPECTOR: [illegible]		DATE: 2-11-95	
APPROVED: [illegible] (HEALTH &SAFETY)		DATE: 2/11/95	
PHOTOGRAPHS TAKEN			

IT CORPORATION

PROJECT

EQUIPMENT INSPECTION LOG

Equipment Type: LOADER

Equipment Supplier: S.S.S.

I.D. #: IT 28-F

Date: 2-11-95

BRAKES	✓	COOLING WATER	✓
AIR SYSTEM	✓	OPERATING CONTROLS	✓
TIRES/TRACKS	✓	LIGHTS/REFLECTORS	✓
HORN	✓	WINDSHIELD WIPERS	✓
SAFETY DEVICES	✓	FIRE EXTINGUISHER	✓
GLASS	✓	BACKUP ALARM	✓
MIRRORS	✓	ENGINE OIL ✓	Add/Check
DEFROSTER	✓	EXHAUST SYSTEM	✓
STEERING SYSTEM	✓	FLUID LEVELS	✓
WIRE ROPE	Nd	MAINTAINENCE MANUALS	✓
APPEARANCE	✓	OPERATING MANUALS	✓
ELECTRICAL SYSTEM	✓	LOAD CHARTS	✓
INSPECTOR: F Moore		DATE: 2-11-95	
APPROVED: Dick Allen (HEALTH &SAFETY)		DATE: 2/11/95	
PHOTOGRAPHS TAKEN			

IT CORPORATION

PROJECT

EQUIPMENT INSPECTION LOG

Equipment Type: LOADER

Equipment Supplier: S.S.S.

I.D. #: 966

Date: 2-7-95

BRAKES	✓	COOLING WATER	✓
AIR SYSTEM	✓	OPERATING CONTROLS	✓
TIRES/TRACKS	✓	LIGHTS/REFLECTORS	✓
HORN	✓	WINDSHIELD WIPERS	✓
SAFETY DEVICES	✓	FIRE EXTINGUISHER	✓
GLASS	✓	BACKUP ALARM	✓
MIRRORS	✓	ENGINE OIL Add/Check	✓
DEFROSTER	✓	EXHAUST SYSTEM	✓
STEERING SYSTEM	✓	FLUID LEVELS	✓
WIRE ROPE	N/A	MAINTAINENCE MANUALS	✓
APPEARANCE	✓	OPERATING MANUALS	✓
ELECTRICAL SYSTEM	✓	LOAD CHARTS	✓
INSPECTOR: F Moore		DATE: 2-7-95	
APPROVED: R A C (HEALTH &SAFETY)		DATE: 2/11/95	
PHOTOGRAPHS TAKEN			

IT CORPORATION

PROJECT

EQUIPMENT INSPECTION LOG

Equipment Type: Loader

Equipment Supplier: S.S.S.

I.D. #: 18

Date: 2-7-95

BRAKES ✓	COOLING WATER ✓
AIR SYSTEM ✓	OPERATING CONTROLS ✓
TIRES/TRACKS ✓	LIGHTS/REFLECTORS ✓
HORN ✓	WINDSHIELD WIPERS ✓
SAFETY DEVICES ✓	FIRE EXTINGUISHER ✓
GLASS ✓	BACKUP ALARM ✓
MIRRORS ✓	ENGINE OIL Add/Check
DEFROSTER ✓	EXHAUST SYSTEM ✓
STEERING SYSTEM ✓	FLUID LEVELS ✓
WIRE ROPE N/A	MAINTAINENCE MANUALS ✓
APPEARANCE ✓	OPERATING MANUALS ✓
ELECTRICAL SYSTEM ✓	LOAD CHARTS ✓
INSPECTOR: Thomas Billy	DATE: 2-7-95
APPROVED: [signature] (HEALTH &SAFETY)	DATE: 2/7/95
PHOTOGRAPHS TAKEN	

IT CORPORATION

PROJECT

EQUIPMENT INSPECTION LOG

Equipment Type: [illegible]

Equipment Supplier: [illegible]

I.D. #: [illegible]

Date: 2-7-95

BRAKES	✓	COOLING WATER	✓
AIR SYSTEM	✓	OPERATING CONTROLS	✓
TIRES/TRACKS	✓	LIGHTS/REFLECTORS	✓
HORN	✓	WINDSHIELD WIPERS	✓
SAFETY DEVICES	✓	FIRE EXTINGUISHER	✓
GLASS	✓	BACKUP ALARM	✓
MIRRORS	✓	ENGINE OIL	Add/Check
DEFROSTER	✓	EXHAUST SYSTEM	✓
STEERING SYSTEM	✓	FLUID LEVELS	✓
WIRE ROPE	N/A	MAINTAINENCE MANUALS	✓
APPEARANCE	✓	OPERATING MANUALS	✓
ELECTRICAL SYSTEM	✓	LOAD CHARTS	✓
INSPECTOR: [signature]		DATE: 2-7-95	
APPROVED: [signature] (HEALTH &SAFETY)		DATE: 2/7/95	
PHOTOGRAPHS TAKEN			

IT CORPORATION

PROJECT

EQUIPMENT INSPECTION LOG

Equipment Type: 966 F

Equipment Supplier: S.S.S

I.D. #: 966 F

Date: 2-6-95

BRAKES	✓	COOLING WATER	✓
AIR SYSTEM	✓	OPERATING CONTROLS	✓
TIRES/TRACKS	✓	LIGHTS/REFLECTORS	✓
HORN	✓	WINDSHIELD WIPERS	✓
SAFETY DEVICES	✓	FIRE EXTINGUISHER	✓
GLASS	✓	BACKUP ALARM	✓
MIRRORS	✓	ENGINE OIL ✓	Add/Check
DEFROSTER	✓	EXHAUST SYSTEM	✓
STEERING SYSTEM	✓	FLUID LEVELS	✓
WIRE ROPE	NA	MAINTAINENCE MANUALS	✓
APPEARANCE	✓	OPERATING MANUALS	✓
ELECTRICAL SYSTEM	✓	LOAD CHARTS	✓
INSPECTOR:	J Moore	DATE:	2-6-95
APPROVED:	Wall (HEALTH &SAFETY)	DATE:	2/6/95
PHOTOGRAPHS TAKEN			

IT CORPORATION

PROJECT

EQUIPMENT INSPECTION LOG

Equipment Type: 120 Trac Hoe

Equipment Supplier: S.S.S

I.D. #: 120

Date: 2-6-95

BRAKES	✓	COOLING WATER	✓
AIR SYSTEM	✓	OPERATING CONTROLS	✓
TIRES/TRACKS	✓	LIGHTS/REFLECTORS	✓
HORN	✓	WINDSHIELD WIPERS	✓
SAFETY DEVICES	✓	FIRE EXTINGUISHER	✓
GLASS	✓	BACKUP ALARM	✓
MIRRORS	✓	ENGINE OIL ✓	Add/Check
DEFROSTER	✓	EXHAUST SYSTEM	✓
STEERING SYSTEM	✓	FLUID LEVELS	✓
WIRE ROPE	N/A	MAINTAINENCE MANUALS	—
APPEARANCE	✓	OPERATING MANUALS	—
ELECTRICAL SYSTEM	✓	LOAD CHARTS	—
INSPECTOR:	F Moore	DATE:	2-6-95
APPROVED:	R a C (HEALTH &SAFETY)	DATE:	2/6/95
PHOTOGRAPHS TAKEN			

IT CORPORATION

PROJECT

EQUIPMENT INSPECTION LOG

Equipment Type: IT 28 F LOADER

Equipment Supplier: S.S.S.

I.D. #: 28

Date: 2-6-95

BRAKES	✓	COOLING WATER	✓
AIR SYSTEM	✓	OPERATING CONTROLS	✓
TIRES/TRACKS	✓	LIGHTS/REFLECTORS	✓
HORN	✓	WINDSHIELD WIPERS	✓
SAFETY DEVICES	✓	FIRE EXTINGUISHER	✓
GLASS	✓	BACKUP ALARM	✓
MIRRORS	✓	ENGINE OIL ✓	Add/Check
DEFROSTER	✓	EXHAUST SYSTEM	✓
STEERING SYSTEM	✓	FLUID LEVELS	✓
WIRE ROPE	NA	MAINTAINENCE MANUALS	✓
APPEARANCE	✓	OPERATING MANUALS	✓
ELECTRICAL SYSTEM	✓	LOAD CHARTS	✓
INSPECTOR:	J Moore	DATE:	2-6-95
APPROVED: (HEALTH &SAFETY)	[illegible]	DATE:	2/6/95
PHOTOGRAPHS TAKEN			

IT CORPORATION

PROJECT

EQUIPMENT INSPECTION LOG

Equipment Type: D3C DOZER

Equipment Supplier: S.S.S

I.D. #: D3C

Date: 2-6-95

BRAKES	✓	COOLING WATER	✓
AIR SYSTEM	✓	OPERATING CONTROLS	✓
TIRES/TRACKS	✓	LIGHTS/REFLECTORS	✓
HORN	✓	WINDSHIELD WIPERS	N/A
SAFETY DEVICES	✓	FIRE EXTINGUISHER	✓
GLASS	NA	BACKUP ALARM	✓
MIRRORS	✓	ENGINE OIL ✓	Add/Check
DEFROSTER	NA	EXHAUST SYSTEM	✓
STEERING SYSTEM	✓	FLUID LEVELS	✓
WIRE ROPE	NA	MAINTAINENCE MANUALS	N/A
APPEARANCE	✓	OPERATING MANUALS	NA
ELECTRICAL SYSTEM	✓	LOAD CHARTS	N/A
INSPECTOR: ~~2 6 95~~ J Moore		DATE: 2-6-95	
APPROVED: R G C (HEALTH &SAFETY)		DATE: 2/6/95	
PHOTOGRAPHS TAKEN			

IT CORPORATION

PROJECT

EQUIPMENT INSPECTION LOG

Equipment Type: IT 18F LOADER

Equipment Supplier: S.S.S.

I.D. #: 18

Date: 2-6-95

BRAKES	✓	COOLING WATER	✓
AIR SYSTEM	✓	OPERATING CONTROLS	✓
TIRES/TRACKS	✓	LIGHTS/REFLECTORS	✓
HORN	✓	WINDSHIELD WIPERS	✓
SAFETY DEVICES	✓	FIRE EXTINGUISHER	✓
GLASS	✓	BACKUP ALARM	✓
MIRRORS	✓	ENGINE OIL ✓	Add/Check
DEFROSTER	✓	EXHAUST SYSTEM	✓
STEERING SYSTEM	✓	FLUID LEVELS	✓
WIRE ROPE	NA	MAINTAINENCE MANUALS	✓
APPEARANCE	✓	OPERATING MANUALS	✓
ELECTRICAL SYSTEM	✓	LOAD CHARTS	✓
INSPECTOR:	F. Moore	DATE:	2-4-95
APPROVED:	Zack (HEALTH &SAFETY)	DATE:	2/6/95
PHOTOGRAPHS TAKEN			

IT CORPORATION

PROJECT

EQUIPMENT INSPECTION LOG

Equipment Type: LOADER

Equipment Supplier: SSS

I.D. #: 966F

Date: 2-13-95

BRAKES	✓	COOLING WATER	✓
AIR SYSTEM	✓	OPERATING CONTROLS	✓
TIRES/TRACKS	✓	LIGHTS/REFLECTORS	✓
HORN	✓	WINDSHIELD WIPERS	✓
SAFETY DEVICES	✓	FIRE EXTINGUISHER	✓
GLASS	✓	BACKUP ALARM	✓
MIRRORS	✓	ENGINE OIL ✓	Add/Check
DEFROSTER	✓	EXHAUST SYSTEM	✓
STEERING SYSTEM	✓	FLUID LEVELS	✓
WIRE ROPE	NA	MAINTAINENCE MANUALS	✓
APPEARANCE	✓	OPERATING MANUALS	✓
ELECTRICAL SYSTEM	✓	LOAD CHARTS	✓
INSPECTOR:	[illegible]	DATE:	2-13-95
APPROVED: (HEALTH &SAFETY)	[illegible]	DATE:	2/13/95
PHOTOGRAPHS TAKEN			

IT CORPORATION

PROJECT

EQUIPMENT INSPECTION LOG

Equipment Type: LOADER

Equipment Supplier: S.S.C

I.D. #: 966 F

Date: 2-18-95

BRAKES	✓	COOLING WATER	✓
AIR SYSTEM	✓	OPERATING CONTROLS	✓
TIRES/TRACKS	✓	LIGHTS/REFLECTORS	✓
HORN	✓	WINDSHIELD WIPERS	✓
SAFETY DEVICES	✓	FIRE EXTINGUISHER	✓
GLASS	✓	BACKUP ALARM	✓
MIRRORS	✓	ENGINE OIL	✓ Add/Check
DEFROSTER	✓	EXHAUST SYSTEM	✓
STEERING SYSTEM	✓	FLUID LEVELS	✓
WIRE ROPE	N/A	MAINTAINENCE MANUALS	✓
APPEARANCE	✓	OPERATING MANUALS	✓
ELECTRICAL SYSTEM	✓	LOAD CHARTS	✓
INSPECTOR:	J Moore	DATE:	2-18-95
APPROVED: (HEALTH &SAFETY)	[illegible]	DATE:	2-18-95
PHOTOGRAPHS TAKEN			

IT CORPORATION

PROJECT

EQUIPMENT INSPECTION LOG

Equipment Type: IT 28 Loader Hours -

Equipment Supplier: SS

I.D. #: CAT IT 28

Date: 2/17/95

BRAKES	✓	COOLING WATER	✓
AIR SYSTEM	✓	OPERATING CONTROLS	✓
TIRES/TRACKS	✓	LIGHTS/REFLECTORS	✓
HORN	✓	WINDSHIELD WIPERS	✓
SAFETY DEVICES	✓	FIRE EXTINGUISHER	✓
GLASS	✓	BACKUP ALARM	✓
MIRRORS	✓	ENGINE OIL	✓ Add/Check
DEFROSTER	✓	EXHAUST SYSTEM	✓
STEERING SYSTEM	✓	FLUID LEVELS	✓
WIRE ROPE	N/A	MAINTAINENCE MANUALS	✓
APPEARANCE	✓	OPERATING MANUALS	✓
ELECTRICAL SYSTEM	✓	LOAD CHARTS	✓
INSPECTOR: [signature]		DATE: 2/17/95	
APPROVED: [signature] (HEALTH &SAFETY)		DATE: 2-17-95	
PHOTOGRAPHS TAKEN			

IT CORPORATION

PROJECT

EQUIPMENT INSPECTION LOG

Equipment Type: D-3 Dozer Hours - 631.7

Equipment Supplier: SS

I.D. #: CAT D-3

Date: 2/17/95

BRAKES	✓	COOLING WATER	✓
AIR SYSTEM	N/A	OPERATING CONTROLS	✓
TIRES/TRACKS	✓	LIGHTS/REFLECTORS	✓
HORN	✓	WINDSHIELD WIPERS	N/A
SAFETY DEVICES	✓	FIRE EXTINGUISHER	✓
GLASS	N/A	BACKUP ALARM	✓
MIRRORS	✓	ENGINE OIL	✓ Add/Check
DEFROSTER	N/A	EXHAUST SYSTEM	✓
STEERING SYSTEM	✓	FLUID LEVELS	✓
WIRE ROPE	N/A	MAINTAINENCE MANUALS	✓
APPEARANCE	✓	OPERATING MANUALS	✓
ELECTRICAL SYSTEM	✓	LOAD CHARTS	✓
INSPECTOR: [illegible]		DATE: 2/17/95	
APPROVED: [illegible] (HEALTH &SAFETY)		DATE: 2/17/95	
PHOTOGRAPHS TAKEN			

IT CORPORATION

PROJECT

EQUIPMENT INSPECTION LOG

Equipment Type: IT 18 (Lrs) 782.1

Equipment Supplier: CAT IT 18

I.D. #: IT 18

Date: 2-17-95

BRAKES	✓	COOLING WATER	✓
AIR SYSTEM	✓	OPERATING CONTROLS	✓
TIRES/TRACKS	✓	LIGHTS/REFLECTORS	✓
HORN	✓	WINDSHIELD WIPERS	✓
SAFETY DEVICES	✓	FIRE EXTINGUISHER	✓
GLASS	✓	BACKUP ALARM	✓
MIRRORS	✓	ENGINE OIL	✓ Add/Check
DEFROSTER	✓	EXHAUST SYSTEM	✓
STEERING SYSTEM	✓	FLUID LEVELS	✓
WIRE ROPE	N/A	MAINTAINENCE MANUALS	✓
APPEARANCE	✓	OPERATING MANUALS	✓
ELECTRICAL SYSTEM	✓	LOAD CHARTS	✓
INSPECTOR: Thomas Billy		DATE: 2-17-95	
APPROVED: [signature] (HEALTH &SAFETY)		DATE: 2/17/95	
PHOTOGRAPHS TAKEN			

IT CORPORATION

PROJECT

EQUIPMENT INSPECTION LOG

Equipment Type: Loader

Equipment Supplier: SSS

I.D. #: IT28

Date: 2-15-95

BRAKES	✓	COOLING WATER	✓
AIR SYSTEM	✓	OPERATING CONTROLS	✓
TIRES/TRACKS	✓	LIGHTS/REFLECTORS	✓
HORN	✓	WINDSHIELD WIPERS	✓
SAFETY DEVICES	✓	FIRE EXTINGUISHER	✓
GLASS	✓ Front + left front cracked	BACKUP ALARM	✓
MIRRORS	✓	ENGINE OIL Add/Check	✓
DEFROSTER	✓	EXHAUST SYSTEM	✓
STEERING SYSTEM	✓	FLUID LEVELS	✓
WIRE ROPE	✓	MAINTAINENCE MANUALS	✓
APPEARANCE	✓	OPERATING MANUALS	✓
ELECTRICAL SYSTEM	✓	LOAD CHARTS	✓
INSPECTOR: [illegible]		DATE: 2-15-95	
APPROVED: [illegible] (HEALTH &SAFETY)		DATE: 2/17/95	
PHOTOGRAPHS TAKEN			

IT CORPORATION

PROJECT

EQUIPMENT INSPECTION LOG

Equipment Type: LOADER

Equipment Supplier: SSS

I.D. #: 966 F

Date: 2-16-95

BRAKES	✓	COOLING WATER	✓
AIR SYSTEM	✓	OPERATING CONTROLS	✓
TIRES/TRACKS	✓	LIGHTS/REFLECTORS	✓
HORN	✓	WINDSHIELD WIPERS	✓
SAFETY DEVICES	✓	FIRE EXTINGUISHER	✓
GLASS	✓	BACKUP ALARM	✓
MIRRORS	✓	ENGINE OIL ✓	Add/Check ✓
DEFROSTER	✓	EXHAUST SYSTEM	✓
STEERING SYSTEM	✓	FLUID LEVELS	✓
WIRE ROPE	NA	MAINTAINENCE MANUALS	✓
APPEARANCE	✓	OPERATING MANUALS	✓
ELECTRICAL SYSTEM	✓	LOAD CHARTS	✓
INSPECTOR: F Moore		DATE: 2-16-95	
APPROVED: D A C (HEALTH &SAFETY)		DATE: 2/16/95	
PHOTOGRAPHS TAKEN			

IT CORPORATION

PROJECT

EQUIPMENT INSPECTION LOG

Equipment Type: IT 18

Equipment Supplier: CAT

I.D. #: CAT IT 18

Date: 2-14-95

BRAKES	✓	COOLING WATER	✓
AIR SYSTEM	✓	OPERATING CONTROLS	✓
TIRES/TRACKS	✓	LIGHTS/REFLECTORS	✓
HORN	✓	WINDSHIELD WIPERS	✓
SAFETY DEVICES	✓	FIRE EXTINGUISHER	✓
GLASS	✓	BACKUP ALARM	✓
MIRRORS	✓	ENGINE OIL	✓ Add/Check
DEFROSTER	✓	EXHAUST SYSTEM	✓
STEERING SYSTEM	✓	FLUID LEVELS	✓
WIRE ROPE	N/A	MAINTAINENCE MANUALS	✓
APPEARANCE	✓	OPERATING MANUALS	✓
ELECTRICAL SYSTEM	✓	LOAD CHARTS	✓
INSPECTOR: Thomas Bailey		DATE: 2-14-95	
APPROVED: [illegible] (HEALTH &SAFETY)		DATE: 2/14/95	
PHOTOGRAPHS TAKEN			

IT CORPORATION

PROJECT

EQUIPMENT INSPECTION LOG

Equipment Type: LOADER

Equipment Supplier: S.S.S

I.D. #: 966F

Date: 2-15-95

BRAKES	✓	COOLING WATER	✓
AIR SYSTEM	✓	OPERATING CONTROLS	✓
TIRES/TRACKS	✓	LIGHTS/REFLECTORS	✓
HORN	✓	WINDSHIELD WIPERS	✓
SAFETY DEVICES	✓	FIRE EXTINGUISHER	✓
GLASS	✓	BACKUP ALARM	✓
MIRRORS	✓	ENGINE OIL ✓	Add/Check
DEFROSTER	✓	EXHAUST SYSTEM	✓
STEERING SYSTEM	✓	FLUID LEVELS	✓
WIRE ROPE	NA	MAINTAINENCE MANUALS	✓
APPEARANCE	✓	OPERATING MANUALS	✓
ELECTRICAL SYSTEM	✓	LOAD CHARTS	✓
INSPECTOR:	J Moore	DATE:	2-15-95
APPROVED:	[signature] (HEALTH &SAFETY)	DATE:	2/15/95
PHOTOGRAPHS TAKEN			

IT CORPORATION

PROJECT

EQUIPMENT INSPECTION LOG

Equipment Type: LOADER

Equipment Supplier: S.S.S.

I.D. #: 966 F

Date: 2-14-95

BRAKES	✓	COOLING WATER	✓
AIR SYSTEM	✓	OPERATING CONTROLS	✓
TIRES/TRACKS	✓	LIGHTS/REFLECTORS	✓
HORN	✓	WINDSHIELD WIPERS	✓
SAFETY DEVICES	✓	FIRE EXTINGUISHER	✓
GLASS	✓	BACKUP ALARM	✓
MIRRORS	✓	ENGINE OIL ✓	Add/Check
DEFROSTER	✓	EXHAUST SYSTEM	✓
STEERING SYSTEM	✓	FLUID LEVELS	✓
WIRE ROPE	NA	MAINTAINENCE MANUALS	✓
APPEARANCE	✓	OPERATING MANUALS	✓
ELECTRICAL SYSTEM	✓	LOAD CHARTS	✓
INSPECTOR:	F Moore	DATE:	2-14-95
APPROVED:	Wade (HEALTH &SAFETY)	DATE:	2/14/95
PHOTOGRAPHS TAKEN			

IT CORPORATION

PROJECT

EQUIPMENT INSPECTION LOG

Equipment Type: Track Hoe

Equipment Supplier: SSS

I.D. #: E120B

Date: 2-17-95

HOURS - 709.6

BRAKES	✓	COOLING WATER	✓
AIR SYSTEM	✓	OPERATING CONTROLS	✓
TIRES/TRACKS	✓	LIGHTS/REFLECTORS	✓
HORN	✓	WINDSHIELD WIPERS	✓
SAFETY DEVICES	✓	FIRE EXTINGUISHER	✓
GLASS	Front top cracked " " Bottom Missing	BACKUP ALARM	✓
MIRRORS	✓	ENGINE OIL	Add/Check ✓
DEFROSTER	✓	EXHAUST SYSTEM	✓
STEERING SYSTEM	✓	FLUID LEVELS	✓
WIRE ROPE	✓	MAINTAINENCE MANUALS	✓
APPEARANCE	✓	OPERATING MANUALS	✓
ELECTRICAL SYSTEM	✓	LOAD CHARTS	✓
INSPECTOR:	[signature]	DATE:	2-17-95
APPROVED:	[signature] (HEALTH &SAFETY)	DATE:	2/17/95
PHOTOGRAPHS TAKEN			

IT CORPORATION

PROJECT

EQUIPMENT INSPECTION LOG

Equipment Type: LOADER

Equipment Supplier: S.S.S

I.D. #: 966F

Date: 2-17-95

Hours 782.6

BRAKES	✓	COOLING WATER	✓
AIR SYSTEM	✓	OPERATING CONTROLS	✓
TIRES/TRACKS	✓	LIGHTS/REFLECTORS	✓
HORN	✓	WINDSHIELD WIPERS	✓
SAFETY DEVICES	✓	FIRE EXTINGUISHER	✓
GLASS	✓	BACKUP ALARM	✓
MIRRORS	✓	ENGINE OIL ✓	Add/Check
DEFROSTER	✓	EXHAUST SYSTEM	✓
STEERING SYSTEM	✓	FLUID LEVELS	✓
WIRE ROPE	NA	MAINTAINENCE MANUALS	✓
APPEARANCE	✓	OPERATING MANUALS	✓
ELECTRICAL SYSTEM	✓	LOAD CHARTS	✓
INSPECTOR:	T Moore	DATE:	2-17-95
APPROVED:	Wall (HEALTH &SAFETY)	DATE:	2/17/95
PHOTOGRAPHS TAKEN			

IT CORPORATION

PROJECT

EQUIPMENT INSPECTION LOG

Equipment Type: 966

Equipment Supplier: S.S.

I.D. #:

Date: 2-22-95

BRAKES	✓	COOLING WATER	✓
AIR SYSTEM	✓	OPERATING CONTROLS	✓
TIRES/TRACKS	✓	LIGHTS/REFLECTORS	✓
HORN	✓	WINDSHIELD WIPERS	✓
SAFETY DEVICES	✓	FIRE EXTINGUISHER	✓
GLASS	✓	BACKUP ALARM	✓
MIRRORS	✓	ENGINE OIL	Add/Check
DEFROSTER	✓	EXHAUST SYSTEM	✓
STEERING SYSTEM	✓	FLUID LEVELS	✓
WIRE ROPE	NA	MAINTAINENCE MANUALS	✓
APPEARANCE	✓	OPERATING MANUALS	✓
ELECTRICAL SYSTEM	✓	LOAD CHARTS	✓
INSPECTOR:	Eddie	DATE:	2-22-95
APPROVED: (HEALTH &SAFETY)	[signature]	DATE:	2/22/95
PHOTOGRAPHS TAKEN			

IT CORPORATION

PROJECT

EQUIPMENT INSPECTION LOG

Equipment Type: IT 28

Equipment Supplier: S.S.

I.D. #:

Date: 2-22-95

BRAKES	✓	COOLING WATER	✓
AIR SYSTEM	✓	OPERATING CONTROLS	✓
TIRES/TRACKS	✓	LIGHTS/REFLECTORS	✓
HORN	✓	WINDSHIELD WIPERS	✓
SAFETY DEVICES	✓	FIRE EXTINGUISHER	✓
GLASS	✓	BACKUP ALARM	✓
MIRRORS	✓	ENGINE OIL	Add/Check
DEFROSTER	✓	EXHAUST SYSTEM	✓
STEERING SYSTEM	✓	FLUID LEVELS	✓
WIRE ROPE	NA	MAINTAINENCE MANUALS	✓
APPEARANCE	✓	OPERATING MANUALS	✓
ELECTRICAL SYSTEM	✓	LOAD CHARTS	✓
INSPECTOR: Eddie		DATE: 2-22-95	
APPROVED: [signature] (HEALTH &SAFETY)		DATE: 2/22/95	
PHOTOGRAPHS TAKEN			

IT CORPORATION

PROJECT

EQUIPMENT INSPECTION LOG

Equipment Type: IT 18

Equipment Supplier: S.S

I.D. #:

Date: 2-22-95

BRAKES	✓	COOLING WATER	✓
AIR SYSTEM	✓	OPERATING CONTROLS	✓
TIRES/TRACKS	✓	LIGHTS/REFLECTORS	✓
HORN	✓	WINDSHIELD WIPERS	✓
SAFETY DEVICES	✓	FIRE EXTINGUISHER	✓
GLASS	✓	BACKUP ALARM	✓
MIRRORS	✓	ENGINE OIL	Add/Check
DEFROSTER	✓	EXHAUST SYSTEM	✓
STEERING SYSTEM	✓	FLUID LEVELS	✓
WIRE ROPE	NA	MAINTAINENCE MANUALS	✓
APPEARANCE	✓	OPERATING MANUALS	✓
ELECTRICAL SYSTEM	✓	LOAD CHARTS	✓
INSPECTOR:	Eddie	DATE:	2-22-95
APPROVED: (HEALTH &SAFETY)	Walk	DATE:	2/22/95
PHOTOGRAPHS TAKEN			

IT CORPORATION

PROJECT

EQUIPMENT INSPECTION LOG

Equipment Type: T.T 28

Equipment Supplier: S.S.

I.D. #:

Date: 2-21-95

BRAKES	✓	COOLING WATER	✓
AIR SYSTEM	✓	OPERATING CONTROLS	✓
TIRES/TRACKS	✓	LIGHTS/REFLECTORS	✓
HORN	✓	WINDSHIELD WIPERS	✓
SAFETY DEVICES	✓	FIRE EXTINGUISHER	✓
GLASS	✓	BACKUP ALARM	✓
MIRRORS	✓	ENGINE OIL	Add/Check
DEFROSTER	✓	EXHAUST SYSTEM	✓
STEERING SYSTEM	✓	FLUID LEVELS	✓
WIRE ROPE	NA	MAINTAINENCE MANUALS	✓
APPEARANCE	✓	OPERATING MANUALS	✓
ELECTRICAL SYSTEM	✓	LOAD CHARTS	✓
INSPECTOR:	[illegible]	DATE:	2-21-95
APPROVED:	[illegible] (HEALTH &SAFETY)	DATE:	2/22/95
PHOTOGRAPHS TAKEN			

IT CORPORATION

PROJECT

EQUIPMENT INSPECTION LOG

Equipment Type: Trackhoe

Equipment Supplier: SSS

I.D. #: E120B

Date: 2-20-95

BRAKES	✓	COOLING WATER	✓
AIR SYSTEM	✓	OPERATING CONTROLS	✓
TIRES/TRACKS	✓	LIGHTS/REFLECTORS	✓
HORN	✓	WINDSHIELD WIPERS	✓
SAFETY DEVICES	✓	FIRE EXTINGUISHER	✓
GLASS	Front Top cracked Botton missing	BACKUP ALARM	✓
MIRRORS	✓	ENGINE OIL Add/Check	✓
DEFROSTER	✓	EXHAUST SYSTEM	✓
STEERING SYSTEM	✓	FLUID LEVELS	✓
WIRE ROPE	✓	MAINTAINENCE MANUALS	✓
APPEARANCE	✓	OPERATING MANUALS	✓
ELECTRICAL SYSTEM	✓	LOAD CHARTS	✓
INSPECTOR:	[signature]	DATE:	2-20-95
APPROVED: (HEALTH &SAFETY)	[signature]	DATE:	2/20/95
PHOTOGRAPHS TAKEN			

IT CORPORATION

PROJECT

EQUIPMENT INSPECTION LOG

Equipment Type: Trackhoe

Equipment Supplier: SSS

I.D. #: E120B

Date: 2-21-95

BRAKES	✓	COOLING WATER	✓
AIR SYSTEM	✓	OPERATING CONTROLS	✓
TIRES/TRACKS	✓	LIGHTS/REFLECTORS	✓
HORN	✓	WINDSHIELD WIPERS	✓
SAFETY DEVICES	✓	FIRE EXTINGUISHER	✓
GLASS	Front Top Cracked Button Missing	BACKUP ALARM	✓
MIRRORS	✓	ENGINE OIL Add/Check	✓
DEFROSTER	✓	EXHAUST SYSTEM	✓
STEERING SYSTEM	✓	FLUID LEVELS	✓
WIRE ROPE	✓	MAINTAINENCE MANUALS	✓
APPEARANCE	✓	OPERATING MANUALS	✓
ELECTRICAL SYSTEM	✓	LOAD CHARTS	✓
INSPECTOR:	[illegible]	DATE:	2-21-95
APPROVED: (HEALTH &SAFETY)	[illegible]	DATE:	2/22/95
PHOTOGRAPHS TAKEN			

IT CORPORATION

PROJECT

EQUIPMENT INSPECTION LOG

Equipment Type: Dozer

Equipment Supplier: S.S.

I.D. #:

Date: 2-21-95

BRAKES	✓	COOLING WATER	✓
AIR SYSTEM	✓	OPERATING CONTROLS	✓
TIRES/TRACKS	✓	LIGHTS/REFLECTORS	✓
HORN	✓	WINDSHIELD WIPERS	NA
SAFETY DEVICES	✓	FIRE EXTINGUISHER	✓
GLASS	ND	BACKUP ALARM	✓
MIRRORS	✓	ENGINE OIL	✓ Add/Check
DEFROSTER	NA	EXHAUST SYSTEM	✓
STEERING SYSTEM	✓	FLUID LEVELS	✓
WIRE ROPE	NA	MAINTAINENCE MANUALS	✓
APPEARANCE	✓	OPERATING MANUALS	✓
ELECTRICAL SYSTEM	✓	LOAD CHARTS	—
INSPECTOR:	EL	DATE:	2-21-95
APPROVED: (HEALTH &SAFETY)	[illegible]	DATE:	2/22/95
PHOTOGRAPHS TAKEN			

IT CORPORATION

PROJECT

EQUIPMENT INSPECTION LOG

Equipment Type: 120 Trackhoe

Equipment Supplier: S.S

I.D. #:

Date: 2-22-95

BRAKES ✓	COOLING WATER ✓
AIR SYSTEM ✓	OPERATING CONTROLS ✓
TIRES/TRACKS ✓	LIGHTS/REFLECTORS ✓
HORN ✓	WINDSHIELD WIPERS ✓
SAFETY DEVICES ✓	FIRE EXTINGUISHER ✓
GLASS 2 Glass Bad	BACKUP ALARM ✓
MIRRORS ✓	ENGINE OIL ✓ Add/Check
DEFROSTER ✓	EXHAUST SYSTEM ✓
STEERING SYSTEM ✓	FLUID LEVELS ✓
WIRE ROPE N/A	MAINTAINENCE MANUALS ✓
APPEARANCE ✓	OPERATING MANUALS ✓
ELECTRICAL SYSTEM ✓	LOAD CHARTS ✓
INSPECTOR: Eddie	DATE: 2-22-95
APPROVED: [signature] (HEALTH &SAFETY)	DATE: 2/22/95
PHOTOGRAPHS TAKEN	

INTERNATIONAL TECHNOLOGY CORPORATION

DATE: 04-19-95

DAY: Wed

ATTENTION: S / S

THIS IS TO CERTIFY THAT THE FOLLOWING EQUIPMENT HAS BEEN DECONTAMINATED AND IS PERMITTED TO LEAVE THE SITE FOR RETURN

NAME OF EQUIPMENT:

E 120 B

Track hoe

SUPERVISOR'S SIGNATURE:

HEALTH AND SAFETY'S SIGNATURE:

X

ASH LANDFILL
SENECA ARMY DEPOT
ROMULUS, N.Y. 14541

Regional Office
11499 Chester Road • Cincinnati, Ohio 45246-4012 • 513-782-4700 • FAX: 513-782-4807

IT Corporation is a wholly owned subsidiary of International Technology Corporation

INTERNATIONAL TECHNOLOGY CORPORATION

DATE: 04-19-95

DAY: Wed

ATTENTION: S/S

THIS IS TO CERTIFY THAT THE FOLLOWING EQUIPMENT HAS BEEN DECONTAMINATED AND IS PERMITTED TO LEAVE THE SITE FOR RETURN

NAME OF EQUIPMENT:

IT 28F

Loader

SUPERVISOR'S SIGNATURE:

Norman Scott Hyde

HEALTH AND SAFETY'S SIGNATURE:

Norman Scott Hyde

X Terry E. Thomas (Wanda. E. +)

ASH LANDFILL
SENECA ARMY DEPOT
ROMULUS, N.Y. 14541

Regional Office
11499 Chester Road • Cincinnati, Ohio 45246-4012 • 513-782-4700 • FAX: 513-782-4807

IT Corporation is a wholly owned subsidiary of International Technology Corporation

INTERNATIONAL TECHNOLOGY CORPORATION

DATE: 04-20-95

DAY: Thur

ATTENTION: [illegible]

THIS IS TO CERTIFY THAT THE FOLLOWING EQUIPMENT HAS BEEN DECONTAMINATED AND IS PERMITTED TO LEAVE THE SITE FOR RETURN

NAME OF EQUIPMENT:

SL [illegible] Site Light #001

Note: 1) [illegible] light [illegible]
2) [illegible] Stabilizer [illegible]
3) [illegible] Stab. [illegible]
4) [illegible] cable to [illegible]

SUPERVISOR'S SIGNATURE:

[illegible]

HEALTH AND SAFETY'S SIGNATURE:

[illegible]

Timothy P. Elmore

ASH LANDFILL
SENECA ARMY DEPOT
ROMULUS, N.Y. 14541

Regional Office
11499 Chester Road • Cincinnati, Ohio 45246-4012 • 513-782-4700 • FAX: 513-782-4807

IT Corporation is a wholly owned subsidiary of International Technology Corporation

INTERNATIONAL TECHNOLOGY CORPORATION

DATE: 04-20-95

DAY: Thur.

ATTENTION: Keystone

THIS IS TO CERTIFY THAT THE FOLLOWING EQUIPMENT HAS BEEN DECONTAMINATED AND IS PERMITTED TO LEAVE THE SITE FOR RETURN

NAME OF EQUIPMENT:

SL 4000 Site Light [illegible]

Note: Cut cable insulation to tower cable.

SUPERVISOR'S SIGNATURE:

HEALTH AND SAFETY'S SIGNATURE:

Timothy P. Elmore

ASH LANDFILL
SENECA ARMY DEPOT
ROMULUS, N.Y. 14541

Regional Office
11499 Chester Road • Cincinnati, Ohio 45246-4012 • 513-782-4700 • FAX: 513-782-4807

IT Corporation is a wholly owned subsidiary of International Technology Corporation

IT CORPORATION

PROJECT

EQUIPMENT INSPECTION LOG

Equipment Type: Track hoe

Equipment Supplier: S.S.S.

I.D. #: E120B

Date: 2-24-95

BRAKES ✓	COOLING WATER ✓
AIR SYSTEM ✓	OPERATING CONTROLS ✓
TIRES/TRACKS ✓	LIGHTS/REFLECTORS ✓
HORN ✓	WINDSHIELD WIPERS ✓
SAFETY DEVICES ✓	FIRE EXTINGUISHER ✓
GLASS Front Top cracked Bottom missing	BACKUP ALARM ✓
MIRRORS ✓	ENGINE OIL Add/Check ✓
DEFROSTER ✓	EXHAUST SYSTEM ✓
STEERING SYSTEM ✓	FLUID LEVELS ✓
WIRE ROPE ✓	MAINTAINENCE MANUALS ✓
APPEARANCE ✓	OPERATING MANUALS ✓
ELECTRICAL SYSTEM ✓	LOAD CHARTS ✓
INSPECTOR: Michael K. Strickler	DATE: 2-24-95
APPROVED: _____ (HEALTH &SAFETY)	DATE: _____
PHOTOGRAPHS TAKEN	

IT CORPORATION

PROJECT

EQUIPMENT INSPECTION LOG

Equipment Type: Track hoe

Equipment Supplier: SSS

I.D. #: E120B

Date: 2-27-95

BRAKES	✓	COOLING WATER	✓
AIR SYSTEM	✓	OPERATING CONTROLS	✓
TIRES/TRACKS	✓	LIGHTS/REFLECTORS	✓
HORN	✓	WINDSHIELD WIPERS	✓
SAFETY DEVICES	✓	FIRE EXTINGUISHER	✓
GLASS	Front Top Cracked Bottom missing	BACKUP ALARM	✓
MIRRORS	✓	ENGINE OIL Add/Check	✓
DEFROSTER	✓	EXHAUST SYSTEM	✓
STEERING SYSTEM	✓	FLUID LEVELS	✓
WIRE ROPE	✓	MAINTAINENCE MANUALS	✓
APPEARANCE	✓	OPERATING MANUALS	✓
ELECTRICAL SYSTEM	✓	LOAD CHARTS	✓
INSPECTOR:	[illegible]	DATE:	2-27-95
APPROVED: (HEALTH &SAFETY)	Frank M. Vick Jr.	DATE:	2-27-1995
PHOTOGRAPHS TAKEN			

IT CORPORATION

PROJECT

EQUIPMENT INSPECTION LOG

Equipment Type: LOADER

Equipment Supplier: S.S.S

I.D. #: IT 18F

Date: 2-28-95

BRAKES	✓	COOLING WATER	✓
AIR SYSTEM	✓	OPERATING CONTROLS	✓
TIRES/TRACKS	✓	LIGHTS/REFLECTORS	✓
HORN	✓	WINDSHIELD WIPERS	✓
SAFETY DEVICES	✓	FIRE EXTINGUISHER	✓
GLASS	✓	BACKUP ALARM	✓
MIRRORS	✓	ENGINE OIL ✓	Add/Check
DEFROSTER	✓	EXHAUST SYSTEM	✓
STEERING SYSTEM	✓	FLUID LEVELS	✓
WIRE ROPE	NA	MAINTAINENCE MANUALS	✓
APPEARANCE	✓	OPERATING MANUALS	✓
ELECTRICAL SYSTEM	✓	LOAD CHARTS	✓
INSPECTOR:	J. Moore	DATE:	2-28-95
APPROVED:	Frank M. Vohl Jr. (HEALTH &SAFETY)	DATE:	2-28-1995
PHOTOGRAPHS TAKEN			

IT CORPORATION

PROJECT

EQUIPMENT INSPECTION LOG

Equipment Type: LOADER

Equipment Supplier: S.S.S

I.D. #: 966 F

Date: 2-28-95

BRAKES	✓	COOLING WATER	✓
AIR SYSTEM	✓	OPERATING CONTROLS	✓
TIRES/TRACKS	✓	LIGHTS/REFLECTORS	✓
HORN	✓	WINDSHIELD WIPERS	✓
SAFETY DEVICES	✓	FIRE EXTINGUISHER	✓
GLASS	✓	BACKUP ALARM	✓
MIRRORS	✓	ENGINE OIL ✓	Add/Check
DEFROSTER	✓	EXHAUST SYSTEM	✓
STEERING SYSTEM	✓	FLUID LEVELS	✓
WIRE ROPE	NA	MAINTAINENCE MANUALS	✓
APPEARANCE	✓	OPERATING MANUALS	✓
ELECTRICAL SYSTEM	✓	LOAD CHARTS	✓
INSPECTOR: R. Folsom		DATE: 2-28-95	
APPROVED: Frank M. Vidal Jr. (HEALTH &SAFETY)		DATE: 2-28-1995	
PHOTOGRAPHS TAKEN			

IT CORPORATION

PROJECT

EQUIPMENT INSPECTION LOG

Equipment Type: TRACK HOE

Equipment Supplier: S.S.S

I.D. #: 120

Date: 3-1-95

BRAKES	✓	COOLING WATER	✓
AIR SYSTEM	✓	OPERATING CONTROLS	✓
TIRES/TRACKS	✓	LIGHTS/REFLECTORS	✓ Boom Light out
HORN	✓	WINDSHIELD WIPERS	✓
SAFETY DEVICES	✓	FIRE EXTINGUISHER	✓
GLASS Broken	✓	BACKUP ALARM	✓
MIRRORS	✓	ENGINE OIL ✓	Add/Check ✓
DEFROSTER	✓	EXHAUST SYSTEM	✓
STEERING SYSTEM	✓	FLUID LEVELS	✓
WIRE ROPE	NA	MAINTAINENCE MANUALS	✓
APPEARANCE	✓	OPERATING MANUALS	✓
ELECTRICAL SYSTEM	✓	LOAD CHARTS	✓
INSPECTOR: M Steullen		DATE: 3-1-95	
APPROVED: Frank M Vick Jr (HEALTH &SAFETY)		DATE: 3-1-1995	
PHOTOGRAPHS TAKEN			

IT CORPORATION

PROJECT

EQUIPMENT INSPECTION LOG

Equipment Type: LOADER

Equipment Supplier: S.S.S.

I.D. #: 966F

Date: 3-1-95

BRAKES	✓	COOLING WATER	✓
AIR SYSTEM	✓	OPERATING CONTROLS	✓
TIRES/TRACKS	✓	LIGHTS/REFLECTORS	✓
HORN	✓	WINDSHIELD WIPERS	✓
SAFETY DEVICES	✓	FIRE EXTINGUISHER	✓
GLASS	✓	BACKUP ALARM	✓
MIRRORS	✓	ENGINE OIL	Add/Check ✓
DEFROSTER	✓	EXHAUST SYSTEM	✓
STEERING SYSTEM	✓	FLUID LEVELS	✓
WIRE ROPE	NA	MAINTAINENCE MANUALS	✓
APPEARANCE	✓	OPERATING MANUALS	✓
ELECTRICAL SYSTEM	✓	LOAD CHARTS	✓
INSPECTOR:	F Moore	DATE:	3-1-95
APPROVED:	Frank M. Vicki (HEALTH &SAFETY)	DATE:	3-1-1995
PHOTOGRAPHS TAKEN			

IT CORPORATION

PROJECT

EQUIPMENT INSPECTION LOG

Equipment Type: Dozer

Equipment Supplier: S.S.

I.D. #:

Date: 3-2-95

BRAKES ✓	COOLING WATER ✓
AIR SYSTEM ✓	OPERATING CONTROLS ✓
TIRES/TRACKS ✓	LIGHTS/REFLECTORS ✓
HORN ✓	WINDSHIELD WIPERS NA
SAFETY DEVICES ✓	FIRE EXTINGUISHER ✓
GLASS NA	BACKUP ALARM ✓
MIRRORS ✓	ENGINE OIL Add/Check
DEFROSTER NA	EXHAUST SYSTEM ✓
STEERING SYSTEM ✓	FLUID LEVELS ✓
WIRE ROPE NA	MAINTAINENCE MANUALS ✓
APPEARANCE ✓	OPERATING MANUALS ✓
ELECTRICAL SYSTEM ✓	LOAD CHARTS ✓
INSPECTOR: [signature]	DATE: 3-2-95.
APPROVED: Frank M. Vial Jr. (HEALTH &SAFETY)	DATE: 3-2-1995
PHOTOGRAPHS TAKEN	

IT CORPORATION

PROJECT

EQUIPMENT INSPECTION LOG

Equipment Type: LOADER

Equipment Supplier: S.S.S.

I.D. #: 966F

Date: 3-2-95

BRAKES	✓	COOLING WATER	✓
AIR SYSTEM	✓	OPERATING CONTROLS	✓
TIRES/TRACKS	✓	LIGHTS/REFLECTORS	✓
HORN	✓	WINDSHIELD WIPERS	✓
SAFETY DEVICES	✓	FIRE EXTINGUISHER	✓
GLASS	✓	BACKUP ALARM	✓
MIRRORS	✓	ENGINE OIL ✓	Add/Check ✓
DEFROSTER	✓	EXHAUST SYSTEM	✓
STEERING SYSTEM	✓	FLUID LEVELS	✓
WIRE ROPE	NA	MAINTAINENCE MANUALS	✓
APPEARANCE	✓	OPERATING MANUALS	✓
ELECTRICAL SYSTEM	✓	LOAD CHARTS	✓
INSPECTOR: F Moore		DATE: 3-2-95	
APPROVED: Frank M. Vick Jr. (HEALTH &SAFETY)		DATE: 3-2-1995	
PHOTOGRAPHS TAKEN			

IT CORPORATION

PROJECT

EQUIPMENT INSPECTION LOG

Equipment Type: Front end loader

Equipment Supplier: SSS

I.D. #: IT18 F

Date: 3-3-95

BRAKES	✓	COOLING WATER	✓
AIR SYSTEM	✓	OPERATING CONTROLS	✓
TIRES/TRACKS	✓	LIGHTS/REFLECTORS	✓
HORN	✓	WINDSHIELD WIPERS	✓
SAFETY DEVICES	✓	FIRE EXTINGUISHER	✓
GLASS	✓	BACKUP ALARM	✓
MIRRORS	✓	ENGINE OIL Add/Check	✓
DEFROSTER	✓	EXHAUST SYSTEM	✓
STEERING SYSTEM	✓	FLUID LEVELS	✓
WIRE ROPE	✓	MAINTAINENCE MANUALS	✓
APPEARANCE	✓	OPERATING MANUALS	✓
ELECTRICAL SYSTEM	✓	LOAD CHARTS	✓
INSPECTOR: Michael A. Buckley		DATE: 3-3-95	
APPROVED: Frank M. Vick Jr (HEALTH &SAFETY)		DATE: 3-3-1995	
PHOTOGRAPHS TAKEN			

IT CORPORATION

PROJECT

EQUIPMENT INSPECTION LOG

Equipment Type: Track hoe

Equipment Supplier: SSS

I.D. #: E120B

Date: 3-3-95

BRAKES	✓	COOLING WATER	✓
AIR SYSTEM	✓	OPERATING CONTROLS	✓
TIRES/TRACKS	✓	LIGHTS/REFLECTORS	✓
HORN	✓	WINDSHIELD WIPERS	✓
SAFETY DEVICES	✓	FIRE EXTINGUISHER	✓
GLASS	Front Top cracked Bottom missing	BACKUP ALARM	✓
MIRRORS	✓	ENGINE OIL Add/Check	✓
DEFROSTER	✓	EXHAUST SYSTEM	✓
STEERING SYSTEM	✓	FLUID LEVELS	✓
WIRE ROPE	✓	MAINTAINENCE MANUALS	✓
APPEARANCE	✓	OPERATING MANUALS	✓
ELECTRICAL SYSTEM	✓ Access door on left side bent	LOAD CHARTS	✓
INSPECTOR:	Michael [illegible]	DATE:	3-3-95
APPROVED: (HEALTH &SAFETY)	Frank M. Kelly	DATE:	3-3-1995
PHOTOGRAPHS TAKEN			

IT CORPORATION

PROJECT

EQUIPMENT INSPECTION LOG

Equipment Type: Dozer

Equipment Supplier: SSS

I.D. #: D3

Date: 3-3-95

BRAKES ✓	COOLING WATER ✓
AIR SYSTEM ✓	OPERATING CONTROLS ✓
TIRES/TRACKS ✓	LIGHTS/REFLECTORS ✓
HORN ✓	WINDSHIELD WIPERS N/A
SAFETY DEVICES ✓	FIRE EXTINGUISHER ✓
GLASS N/A	BACKUP ALARM ✓
MIRRORS ✓	ENGINE OIL Add/Check ✓
DEFROSTER N/A	EXHAUST SYSTEM ✓
STEERING SYSTEM ✓	FLUID LEVELS ✓
WIRE ROPE ✓	MAINTAINENCE MANUALS ✓
APPEARANCE ✓	OPERATING MANUALS ✓
ELECTRICAL SYSTEM ✓	LOAD CHARTS ✓
INSPECTOR: Michael R. Trickler	DATE: 3-3-95
APPROVED: Frank M. Vick Jr. (HEALTH & SAFETY)	DATE: 3-3-1995
PHOTOGRAPHS TAKEN	hour meeter 666

IT CORPORATION

PROJECT

EQUIPMENT INSPECTION LOG

Equipment Type: loader

Equipment Supplier: SSS

I.D. #: 966

Date: 3 3 95

BRAKES	✓	COOLING WATER	—
AIR SYSTEM	✓	OPERATING CONTROLS	✓
TIRES/TRACKS	✓	LIGHTS/REFLECTORS	✓
HORN	✓	WINDSHIELD WIPERS	✓
SAFETY DEVICES	✓	FIRE EXTINGUISHER	✓
GLASS	✓	BACKUP ALARM	✓
MIRRORS	✓	ENGINE OIL	Add/Check ✓
DEFROSTER	✓	EXHAUST SYSTEM	✓
STEERING SYSTEM	✓	FLUID LEVELS	✓
WIRE ROPE	✓	MAINTAINENCE MANUALS	✓
APPEARANCE	✓	OPERATING MANUALS	✓
ELECTRICAL SYSTEM	✓	LOAD CHARTS	✓
INSPECTOR:	[signature]	DATE:	3-3-95
APPROVED: (HEALTH &SAFETY)	[signature]	DATE:	3-3-1995
PHOTOGRAPHS TAKEN			

IT CORPORATION

PROJECT

EQUIPMENT INSPECTION LOG

Equipment Type: D-3 Dozer

Equipment Supplier: SS

I.D. #: CAT D-3

Date: 3/4/95

BRAKES	✓	COOLING WATER	✓
AIR SYSTEM	N/A	OPERATING CONTROLS	✓
TIRES/TRACKS	✓	LIGHTS/REFLECTORS	✓
HORN	✓	WINDSHIELD WIPERS	N/A
SAFETY DEVICES	✓	FIRE EXTINGUISHER	✓
GLASS	N/A	BACKUP ALARM	✓
MIRRORS	✓	ENGINE OIL	✓ Add/~~Check~~
DEFROSTER	N/A	EXHAUST SYSTEM	✓
STEERING SYSTEM	✓	FLUID LEVELS	✓
WIRE ROPE	N/A	MAINTAINENCE MANUALS	✓
APPEARANCE	✓	OPERATING MANUALS	✓
ELECTRICAL SYSTEM	✓	LOAD CHARTS	✓
INSPECTOR:	Perry Copeland	DATE:	3/4/95
APPROVED:	Frank M. Vick Jr. (HEALTH &SAFETY)	DATE:	3-11-1995
PHOTOGRAPHS TAKEN			

IT CORPORATION

PROJECT

EQUIPMENT INSPECTION LOG

Equipment Type: D-3 Dozer

Equipment Supplier: S.S

I.D. #: CAT D-3

Date: 3/5/95

BRAKES	✓	COOLING WATER	✓
AIR SYSTEM	N/A	OPERATING CONTROLS	✓
TIRES/TRACKS	✓	LIGHTS/REFLECTORS	✓
HORN	✓	WINDSHIELD WIPERS	N/A
SAFETY DEVICES	✓	FIRE EXTINGUISHER	✓
GLASS	N/A	BACKUP ALARM	✓
MIRRORS	✓	ENGINE OIL	✓ Add/Check
DEFROSTER	N/A	EXHAUST SYSTEM	✓
STEERING SYSTEM	✓	FLUID LEVELS	✓
WIRE ROPE	N/A	MAINTAINENCE MANUALS	✓
APPEARANCE	✓	OPERATING MANUALS	✓
ELECTRICAL SYSTEM	✓	LOAD CHARTS	✓
INSPECTOR:	Dennis Coupelard	DATE:	3/5/95
APPROVED:	Frank M. Vish Jr. (HEALTH &SAFETY)	DATE:	3-5-1995
PHOTOGRAPHS TAKEN			

IT CORPORATION

PROJECT

EQUIPMENT INSPECTION LOG

Equipment Type: Trackhoe

Equipment Supplier: SSS

I.D. #: E120B

Date: 3-6-95

BRAKES	✓	COOLING WATER	✓
AIR SYSTEM	✓	OPERATING CONTROLS	✓
TIRES/TRACKS	✓	LIGHTS/REFLECTORS	✓
HORN	✓	WINDSHIELD WIPERS	✓
SAFETY DEVICES	✓	FIRE EXTINGUISHER	✓
GLASS	Broken	BACKUP ALARM	✓
MIRRORS	✓	ENGINE OIL Add/Check	✓
DEFROSTER	✓	EXHAUST SYSTEM	✓
STEERING SYSTEM	✓	FLUID LEVELS	✓
WIRE ROPE	✓	MAINTAINENCE MANUALS	✓
APPEARANCE	✓	OPERATING MANUALS	✓
ELECTRICAL SYSTEM	✓	LOAD CHARTS	✓
INSPECTOR:	Michael [illegible]	DATE:	3-6-95
APPROVED: (HEALTH &SAFETY)	Frank M. Vick Jr.	DATE:	3-6-1995
PHOTOGRAPHS TAKEN			

IT CORPORATION

PROJECT

EQUIPMENT INSPECTION LOG

Equipment Type: loader

Equipment Supplier: SSS

I.D. #: 18

Date: 3-6-95

BRAKES	✓	COOLING WATER	✓
AIR SYSTEM	✓	OPERATING CONTROLS	✓
TIRES/TRACKS	✓	LIGHTS/REFLECTORS	✓
HORN	✓	WINDSHIELD WIPERS	✓
SAFETY DEVICES	✓	FIRE EXTINGUISHER	✓
GLASS	✓	BACKUP ALARM	✓
MIRRORS	✓	ENGINE OIL Add/Check	✓
DEFROSTER	✓	EXHAUST SYSTEM	✓
STEERING SYSTEM	✓	FLUID LEVELS	✓
WIRE ROPE	✓	MAINTAINENCE MANUALS	✓
APPEARANCE	✓	OPERATING MANUALS	✓
ELECTRICAL SYSTEM	✓	LOAD CHARTS	✓
INSPECTOR: Michael Smith		DATE: 3-6-95	
APPROVED: Frank M. Vick Jr. (HEALTH &SAFETY)		DATE: 3-6-1995	
PHOTOGRAPHS TAKEN			

IT CORPORATION

PROJECT

EQUIPMENT INSPECTION LOG

Equipment Type: loader

Equipment Supplier: SSS

I.D. #: 966

Date: 3-6-95

BRAKES	✓	COOLING WATER	✓
AIR SYSTEM	✓	OPERATING CONTROLS	✓
TIRES/TRACKS	✓	LIGHTS/REFLECTORS	✓
HORN	✓	WINDSHIELD WIPERS	✓
SAFETY DEVICES	✓	FIRE EXTINGUISHER	✓
GLASS	✓	BACKUP ALARM	✓
MIRRORS	✓	ENGINE OIL Add/Check	✓
DEFROSTER	✓	EXHAUST SYSTEM	✓
STEERING SYSTEM	✓	FLUID LEVELS	✓
WIRE ROPE	✓	MAINTAINENCE MANUALS	✓
APPEARANCE	✓	OPERATING MANUALS	✓
ELECTRICAL SYSTEM	✓	LOAD CHARTS	✓
INSPECTOR: Rick Talburn		DATE: 3-6-95.	
APPROVED: Frank M Vick Jr. (HEALTH &SAFETY)		DATE: 3-6-1995	
PHOTOGRAPHS TAKEN			

IT CORPORATION

PROJECT

EQUIPMENT INSPECTION LOG

Equipment Type: D-3 Dozer

Equipment Supplier: SS

I.D. #: CAT D-3

Date: 3/6/95

BRAKES	✓	COOLING WATER	✓
AIR SYSTEM	N/A	OPERATING CONTROLS	✓
TIRES/TRACKS	✓	LIGHTS/REFLECTORS	✓
HORN	✓	WINDSHIELD WIPERS	N/A
SAFETY DEVICES	✓	FIRE EXTINGUISHER	✓
GLASS	N/A	BACKUP ALARM	✓
MIRRORS	✓	ENGINE OIL	✓ ~~Add~~/Check 2 qt
DEFROSTER	N/A	EXHAUST SYSTEM	✓
STEERING SYSTEM	✓	FLUID LEVELS	✓
WIRE ROPE	N/A	MAINTAINENCE MANUALS	✓
APPEARANCE	✓	OPERATING MANUALS	✓
ELECTRICAL SYSTEM	✓	LOAD CHARTS	✓
INSPECTOR:	Barry Copeland	DATE:	3/6/95
APPROVED: (HEALTH &SAFETY)	Frank M. Vick Jr.	DATE:	3-6-1995
PHOTOGRAPHS TAKEN			

IT CORPORATION

PROJECT

EQUIPMENT INSPECTION LOG

Equipment Type: D-3 Dozer

Equipment Supplier: SS

I.D. #: CAT D-3

Date: 3/7/95

BRAKES	✓	COOLING WATER	✓
AIR SYSTEM	N/A	OPERATING CONTROLS	✓
TIRES/TRACKS	✓	LIGHTS/REFLECTORS	✓
HORN	✓	WINDSHIELD WIPERS	N/A
SAFETY DEVICES	✓	FIRE EXTINGUISHER	✓
GLASS	N/A	BACKUP ALARM	✓
MIRRORS	✓	ENGINE OIL	✓ Add/Check
DEFROSTER	N/A	EXHAUST SYSTEM	✓
STEERING SYSTEM	✓	FLUID LEVELS	✓
WIRE ROPE	N/A	MAINTAINENCE MANUALS	✓
APPEARANCE	✓	OPERATING MANUALS	✓
ELECTRICAL SYSTEM	✓	LOAD CHARTS	✓
INSPECTOR:	[signature]	DATE:	3/7/95
APPROVED: (HEALTH &SAFETY)	Frank M. Veal Jr	DATE:	3-7-1995
PHOTOGRAPHS TAKEN			

IT CORPORATION

PROJECT

EQUIPMENT INSPECTION LOG

Equipment Type: D-3 Dozer

Equipment Supplier: SS

I.D. #: CAT D-3

Date: 3/8/95

BRAKES	✓	COOLING WATER	✓
AIR SYSTEM	N/A	OPERATING CONTROLS	✓
TIRES/TRACKS	✓	LIGHTS/REFLECTORS	✓
HORN	✓	WINDSHIELD WIPERS	N/A
SAFETY DEVICES	✓	FIRE EXTINGUISHER	✓
GLASS	N/A	BACKUP ALARM	✓
MIRRORS	✓	ENGINE OIL	✓ Add/~~Check~~
DEFROSTER	N/A	EXHAUST SYSTEM	✓
STEERING SYSTEM	✓	FLUID LEVELS	✓
WIRE ROPE	N/A	MAINTAINENCE MANUALS	✓
APPEARANCE	✓	OPERATING MANUALS	✓
ELECTRICAL SYSTEM	✓	LOAD CHARTS	✓
INSPECTOR:	Perry Copeland	DATE:	3/8/95
APPROVED: (HEALTH &SAFETY)	Frank M. Vela Jr.	DATE:	3-8-1995
PHOTOGRAPHS TAKEN			

IT CORPORATION

PROJECT

EQUIPMENT INSPECTION LOG

Equipment Type: D-3 Dozer

Equipment Supplier: SS

I.D. #: CAT D-3

Date: 3/13/95

BRAKES	✓	COOLING WATER	✓
AIR SYSTEM	N/A	OPERATING CONTROLS	✓
TIRES/TRACKS	✓	LIGHTS/REFLECTORS	✓
HORN	✓	WINDSHIELD WIPERS	N/A
SAFETY DEVICES	✓	FIRE EXTINGUISHER	✓
GLASS	N/A	BACKUP ALARM	✓
MIRRORS	✓	ENGINE OIL	✓ Add/Check
DEFROSTER	N/A	EXHAUST SYSTEM	✓
STEERING SYSTEM	✓	FLUID LEVELS	✓
WIRE ROPE	N/A	MAINTAINENCE MANUALS	✓
APPEARANCE	✓	OPERATING MANUALS	✓
ELECTRICAL SYSTEM	✓	LOAD CHARTS	✓
INSPECTOR:	Perry Capdevila	DATE:	3/13/95
APPROVED:	Frank M. Vick Jr. (HEALTH &SAFETY)	DATE:	3-13-1995
PHOTOGRAPHS TAKEN			

IT CORPORATION

PROJECT

EQUIPMENT INSPECTION LOG

Equipment Type: Trackhoe

Equipment Supplier: JSS

I.D. #: E120B

Date: 3-14-95

BRAKES	✓	COOLING WATER	✓
AIR SYSTEM	✓	OPERATING CONTROLS	✓
TIRES/TRACKS	✓	LIGHTS/REFLECTORS	✓
HORN	✓	WINDSHIELD WIPERS	✓
SAFETY DEVICES	✓	FIRE EXTINGUISHER	✓
GLASS	✓	BACKUP ALARM	✓
MIRRORS	✓	ENGINE OIL Add/Check	✓
DEFROSTER	✓	EXHAUST SYSTEM	✓
STEERING SYSTEM	✓	FLUID LEVELS	✓
WIRE ROPE	✓	MAINTAINENCE MANUALS	✓
APPEARANCE	✓	OPERATING MANUALS	✓
ELECTRICAL SYSTEM	✓	LOAD CHARTS	✓
INSPECTOR: [signature]		DATE: 3-14-95	
APPROVED: Frank M. Vock Jr. (HEALTH &SAFETY)		DATE: 3-14-1995	
PHOTOGRAPHS TAKEN			

IT CORPORATION

PROJECT

EQUIPMENT INSPECTION LOG

Equipment Type: Dozer

Equipment Supplier: SSS

I.D. #: D-3

Date: 3-14-95

BRAKES	✓	COOLING WATER	✓
AIR SYSTEM	✓	OPERATING CONTROLS	✓
TIRES/TRACKS	✓	LIGHTS/REFLECTORS	✓
HORN	✓	WINDSHIELD WIPERS	N/A
SAFETY DEVICES	✓	FIRE EXTINGUISHER	✓
GLASS	N/A	BACKUP ALARM	✓
MIRRORS	✓ ~~Broken~~ Missing	ENGINE OIL Add/Check	✓
DEFROSTER	N/A	EXHAUST SYSTEM	✓
STEERING SYSTEM	✓	FLUID LEVELS	✓
WIRE ROPE	✓	MAINTAINENCE MANUALS	✓
APPEARANCE	✓	OPERATING MANUALS	✓
ELECTRICAL SYSTEM	✓	LOAD CHARTS	
INSPECTOR: [signature]		DATE: 3-14-95	
APPROVED: Frank M. Vick Jr. (HEALTH &SAFETY)		DATE: 3-14-1995	
PHOTOGRAPHS TAKEN			

IT CORPORATION

PROJECT

EQUIPMENT INSPECTION LOG

Equipment Type: IT 18 loader

Equipment Supplier: SSS

I.D. #: IT18F

Date: 3-14-95

BRAKES	✓	COOLING WATER	✓
AIR SYSTEM	✓	OPERATING CONTROLS	✓
TIRES/TRACKS	✓	LIGHTS/REFLECTORS	✓
HORN	✓	WINDSHIELD WIPERS	✓
SAFETY DEVICES	✓	FIRE EXTINGUISHER	✓
GLASS	✓	BACKUP ALARM	✓
MIRRORS	✓	ENGINE OIL Add/Check	✓
DEFROSTER	✓	EXHAUST SYSTEM	✓
STEERING SYSTEM	✓	FLUID LEVELS	✓
WIRE ROPE	✓	MAINTAINENCE MANUALS	✓
APPEARANCE	✓	OPERATING MANUALS	✓
ELECTRICAL SYSTEM	✓	LOAD CHARTS	✓
INSPECTOR: [signature]		DATE: 3-14-95	
APPROVED: Frank M. Vick Jr. (HEALTH &SAFETY)		DATE: 3-14-1995	
PHOTOGRAPHS TAKEN			

IT CORPORATION

PROJECT

EQUIPMENT INSPECTION LOG

Equipment Type: Track Hoe

Equipment Supplier: SS

I.D. #: CAT 120B

Date: 3/15/95

BRAKES	—	COOLING WATER	—
AIR SYSTEM	N/A	OPERATING CONTROLS	—
TIRES/TRACKS	—	LIGHTS/REFLECTORS	—
HORN	—	WINDSHIELD WIPERS	—
SAFETY DEVICES	—	FIRE EXTINGUISHER	—
GLASS	—	BACKUP ALARM	—
MIRRORS	—	ENGINE OIL	— Add/Check
DEFROSTER	—	EXHAUST SYSTEM	—
STEERING SYSTEM	—	FLUID LEVELS	—
WIRE ROPE	N/A	MAINTAINENCE MANUALS	—
APPEARANCE	—	OPERATING MANUALS	—
ELECTRICAL SYSTEM	—	LOAD CHARTS	—
INSPECTOR:	[illegible]	DATE:	3/15/95
APPROVED: (HEALTH &SAFETY)	Frank M. [illegible] Jr.	DATE:	3-15-1995
PHOTOGRAPHS TAKEN			

IT CORPORATION

PROJECT

EQUIPMENT INSPECTION LOG

Equipment Type: LOADER

Equipment Supplier: S.S.S.

I.D. #: IT 18 F

Date: 3-22-95

BRAKES	✓	COOLING WATER	✓
AIR SYSTEM	✓	OPERATING CONTROLS	✓
TIRES/TRACKS	✓	LIGHTS/REFLECTORS	✓
HORN	✓	WINDSHIELD WIPERS	✓
SAFETY DEVICES	✓	FIRE EXTINGUISHER	✓
GLASS	✓	BACKUP ALARM	✓
MIRRORS	✓	ENGINE OIL ✓	Add/Check ✓
DEFROSTER		EXHAUST SYSTEM	✓
STEERING SYSTEM	✓	FLUID LEVELS	✓
WIRE ROPE	N/A	MAINTAINENCE MANUALS	✓
APPEARANCE	✓	OPERATING MANUALS	✓
ELECTRICAL SYSTEM		LOAD CHARTS	✓
INSPECTOR: J Moore		DATE: 3-22-95	
APPROVED: Frank M. Vel Jr. (HEALTH &SAFETY)		DATE: 3-22-1995	
PHOTOGRAPHS TAKEN			

IT CORPORATION

PROJECT

EQUIPMENT INSPECTION LOG

Equipment Type: ~~[illegible]~~ loader

Equipment Supplier: 555

I.D. #: 966

Date: 3-14-95

BRAKES ✓	COOLING WATER ✓
AIR SYSTEM ✓	OPERATING CONTROLS ✓
TIRES/TRACKS ✓	LIGHTS/REFLECTORS ✓
HORN ✓	WINDSHIELD WIPERS ✓
SAFETY DEVICES ✓	FIRE EXTINGUISHER ✓
GLASS ✓	BACKUP ALARM ✓
MIRRORS ✓	ENGINE OIL Add/Check ✓
DEFROSTER ✓	EXHAUST SYSTEM ✓
STEERING SYSTEM ✓	FLUID LEVELS ✓
WIRE ROPE ✓	MAINTAINENCE MANUALS ✓
APPEARANCE ✓	OPERATING MANUALS ✓
ELECTRICAL SYSTEM ✓	LOAD CHARTS ✓
INSPECTOR: [signature]	DATE: 3-14-95
APPROVED: Frank M. Vick Jr. (HEALTH &SAFETY)	DATE: 3-14-1995
PHOTOGRAPHS TAKEN	

IT CORPORATION

PROJECT

EQUIPMENT INSPECTION LOG

Equipment Type: LOADER

Equipment Supplier: S.S.C

I.D. #: ITBF

Date: 5-2-95

BRAKES	✓	COOLING WATER	✓
AIR SYSTEM	✓	OPERATING CONTROLS	✓
TIRES/TRACKS	✓	LIGHTS/REFLECTORS	✓
HORN	✓	WINDSHIELD WIPERS	✓
SAFETY DEVICES	✓	FIRE EXTINGUISHER	✓
GLASS	✓	BACKUP ALARM	✓
MIRRORS	✓	ENGINE OIL ✓	Add/Check
DEFROSTER	✓	EXHAUST SYSTEM	✓
STEERING SYSTEM	✓	FLUID LEVELS	✓
WIRE ROPE	NA	MAINTAINENCE MANUALS	✓
APPEARANCE	GOOD	OPERATING MANUALS	✓
ELECTRICAL SYSTEM	✓	LOAD CHARTS	✓
INSPECTOR:	J Moore	DATE:	5-2-95
APPROVED:	(HEALTH & SAFETY	DATE:	
PHOTOGRAPHS TAKEN			

IT CORPORATION

PROJECT

EQUIPMENT INSPECTION LOG

Equipment Type: Trackhoe

Equipment Supplier: Harry Farr

I.D. #: Kobelco

Date: 5-2-95

BRAKES	✓	COOLING WATER	✓
AIR SYSTEM	✓	OPERATING CONTROLS	✓
TIRES/TRACKS	✓	LIGHTS/REFLECTORS	✓
HORN	✓	WINDSHIELD WIPERS	✓
SAFETY DEVICES	✓	FIRE EXTINGUISHER	✓
GLASS	✓	BACKUP ALARM	✓
MIRRORS	✓	ENGINE OIL Add/Check	✓
DEFROSTER	✓	EXHAUST SYSTEM	✓
STEERING SYSTEM	✓	FLUID LEVELS	✓
WIRE ROPE	✓	MAINTAINENCE MANUALS	✓
APPEARANCE	✓	OPERATING MANUALS	✓
ELECTRICAL SYSTEM	✓	LOAD CHARTS	✓

INSPECTOR: [signature] DATE: 5-2-95

APPROVED: _____ DATE: _____

(HEALTH & SAFETY

PHOTOGRAPHS TAKEN

IT CORPORATION

PROJECT

EQUIPMENT INSPECTION LOG

Equipment Type: LOADER

Equipment Supplier: S.S.S.

I.D. #: 966F

Date: 5-2-95

BRAKES	✓	COOLING WATER	
AIR SYSTEM	✓	OPERATING CONTROLS	✓
TIRES/TRACKS	✓ Slow Leak Right FRONT	LIGHTS/REFLECTORS	✓
HORN	✓	WINDSHIELD WIPERS	✓
SAFETY DEVICES	✓	FIRE EXTINGUISHER	✓
GLASS	✓	BACKUP ALARM	✓
MIRRORS	✓	ENGINE OIL ✓	Add/Check
DEFROSTER	✓	EXHAUST SYSTEM	✓
STEERING SYSTEM	✓	FLUID LEVELS	✓
WIRE ROPE	NA	MAINTAINENCE MANUALS	✓
APPEARANCE	OK	OPERATING MANUALS	✓
ELECTRICAL SYSTEM	✓	LOAD CHARTS	✓
INSPECTOR:	J Moore	DATE:	5-2-95
APPROVED: (HEALTH &SAFETY)		DATE:	
PHOTOGRAPHS TAKEN			

IT CORPORATION

PROJECT

EQUIPMENT INSPECTION LOG

Equipment Type: DOZER

Equipment Supplier: SSS

I.D. #: D5HLGP

Date: 5-2-95

BRAKES		COOLING WATER	✓
AIR SYSTEM	✓	OPERATING CONTROLS	✓
TIRES/TRACKS	✓	LIGHTS/REFLECTORS	✓
HORN	✓	WINDSHIELD WIPERS	
SAFETY DEVICES	✓	FIRE EXTINGUISHER	✓
GLASS	✓	BACKUP ALARM	✓
MIRRORS	✓	ENGINE OIL	✓ Add/Check
DEFROSTER	✓	EXHAUST SYSTEM	✓
STEERING SYSTEM	✓	FLUID LEVELS	✓
WIRE ROPE	NA	MAINTAINENCE MANUALS	✓
APPEARANCE	Good	OPERATING MANUALS	✓
ELECTRICAL SYSTEM	✓	LOAD CHARTS	✓
INSPECTOR:	J Motre	DATE:	5-2-95
APPROVED:		DATE:	
	(HEALTH & SAFETY)		

PHOTOGRAPHS TAKEN

IT CORPORATION

PROJECT

EQUIPMENT INSPECTION LOG

Equipment Type: IT 18 F

Equipment Supplier:

I.D. #:

Date: 4 May 95

BRAKES	✓	COOLING WATER	✓
AIR SYSTEM		OPERATING CONTROLS	✓
TIRES/TRACKS	✓	LIGHTS/REFLECTORS	✓
HORN	✓	WINDSHIELD WIPERS	✓
SAFETY DEVICES		FIRE EXTINGUISHER	
GLASS	✓	BACKUP ALARM	✓
MIRRORS	✓	ENGINE OIL	✓ Add/Check
DEFROSTER	✓	EXHAUST SYSTEM	✓
STEERING SYSTEM	✓	FLUID LEVELS	✓
WIRE ROPE		MAINTAINENCE MANUALS	
APPEARANCE	✓	OPERATING MANUALS	
ELECTRICAL SYSTEM	✓	LOAD CHARTS	
INSPECTOR:	Gill Williams	DATE	4 May 95
APPROVED:	Frank M. Fisher (HEALTH & SAFETY)	DATE:	5-4-1995

PHOTOGRAPHS TAKEN

IT CORPORATION

PROJECT

EQUIPMENT INSPECTION LOG

Equipment Type: 05 dozer

Equipment Supplier: SS

I.D. #:

Date: 5-5-1995

BRAKES	✓	COOLING WATER	✓
AIR SYSTEM	NX	OPERATING CONTROLS	✓
TIRES/TRACKS	✓	LIGHTS/REFLECTORS	✓
HORN	✓	WINDSHIELD WIPERS	✓
SAFETY DEVICES	✓	FIRE EXTINGUISHER	✓
GLASS	✓	BACKUP ALARM	✓
MIRRORS	✓	ENGINE OIL	Add/Change ✓
DEFROSTER	✓	EXHAUST SYSTEM	✓
STEERING SYSTEM	✓	FLUID LEVELS	✓
WIRE ROPE	✓	MAINTAINENCE MANUALS	✓
APPEARANCE	✓ good	OPERATING MANUALS	✓
ELECTRICAL SYSTEM	✓	LOAD CHARTS	NX
INSPECTOR	[signature]	DATE	5-5-95
APPROVED	Frank M. [signature] (HEALTH & SAFETY)	DATE	5-5-1995

PHOTOGRAPHS TAKEN

IT CORPORATION

PROJECT

EQUIPMENT INSPECTION LOG

Equipment Type: D5 dozer

Equipment Supplier: SS

ID #:

Date: ~~5-5-1995~~ 5-6-1995

BRAKES	✓	COOLING WATER	✓
AIR SYSTEM	✓	OPERATING CONTROLS	✓
TIRES/TRACKS	✓	LIGHTS/REFLECTORS	✓
HORN	✓	WINDSHIELD WIPERS	✓
SAFETY DEVICES	✓	FIRE EXTINGUISHER	✓
GLASS	✓	BACKUP ALARM	✓
MIRRORS	✓	ENGINE OIL	Add/Check ✓
DEFROSTER	✓	EXHAUST SYSTEM	
STEERING SYSTEM	✓	FLUID LEVELS	✓
WIRE ROPE	✓	MAINTAINENCE MANUALS	✓
APPEARANCE	Good	OPERATING MANUALS	✓
ELECTRICAL SYSTEM	✓	LOAD CHARTS	NA

INSPECTOR: [illegible] DATE: 5-6-95

APPROVED: Frank M. Vick Jr. DATE: 5-6-1995

(HEALTH & SAFETY)

PHOTOGRAPHS TAKEN

IT CORPORATION

PROJECT

EQUIPMENT INSPECTION LOG

Equipment Type: LOADER

Equipment Supplier: S S C

Unit: [illegible]

Date: 5-6-95

BRAKES	✓	COOLING WATER	✓
AIR SYSTEM	✓	OPERATING CONTROLS	✓
TIRES/TRACKS	✓	LIGHTS/REFLECTORS	✓
HORN	✓	WINDSHIELD WIPERS	✓
SAFETY DEVICES	✓	FIRE EXTINGUISHER	✓
GLASS	✓	BACKUP ALARM	✓
MIRRORS	✓	ENGINE OIL ✓	Add/Change
DEFROSTER	✓	EXHAUST SYSTEM	✓
STEERING SYSTEM	✓	FLUID LEVELS	✓
WIRE ROPE	NA	MAINTAINENCE MANUALS	✓
APPEARANCE	✓	OPERATING MANUALS	✓
ELECTRICAL SYSTEM	✓	LOAD CHARTS	✓

INSPECTOR: A Moore DATE: 5-6-95

APPROVED: Frank M. Vick Jr. (HEALTH & SAFETY) DATE: 5-6-1995

PHOTOGRAPHS TAKEN

IT CORPORATION

PROJECT

EQUIPMENT INSPECTION LOG

Equipment Type: Track hoe

Equipment Supplier: Harry Farr

Unit #:

Date: 5-6-95

BRAKES	✓	COOLING WATER	✓
AIR SYSTEM	✓	OPERATING CONTROLS	✓
TIRES/TRACKS	✓	LIGHTS/REFLECTORS	✓
HORN	✓	WINDSHIELD WIPERS	✓
SAFETY DEVICES	✓	FIRE EXTINGUISHER	✓
GLASS	✓	BACKUP ALARM	✓
MIRRORS	✓	ENGINE OIL	Add/Check ✓
DEFROSTER	✓	EXHAUST SYSTEM	✓
STEERING SYSTEM	✓	FLUID LEVELS	✓
WIRE ROPE	✓	MAINTAINENCE MANUALS	
APPEARANCE	✓	OPERATING MANUALS	
ELECTRICAL SYSTEM	✓	LOAD CHARTS	

INSPECTOR: [signature] DATE: 5-6-95

APPROVED: [signature] DATE: 5-6-1995

(HEALTH & SAFETY)

PHOTOGRAPHS TAKEN

INTERNATIONAL TECHNOLOGY CORPORATION

DATE: 05-02-95

DAY: Tue

ATTENTION: Goulds Pumps

THIS IS TO CERTIFY THAT THE FOLLOWING EQUIPMENT HAS BEEN DECONTAMINATED AND IS PERMITTED TO LEAVE THE SITE FOR RETURN

NAME OF EQUIPMENT:

CD100 Pump
2 (4X10) suct hoses
1 (4X50) disch hose
1 (3X10) suct hose
1 4" Screen
1 3" Screen + 1 4" QD Flange

Damage:
Left fender
Broken Loose

SUPERVISOR'S SIGNATURE:

HEALTH AND SAFETY'S SIGNATURE:

ASH LANDFILL
SENECA ARMY DEPOT
ROMULUS, N.Y. 14541

Regional Office
11499 Chester Road • Cincinnati, Ohio 45246-4012 • 513-782-4700 • FAX: 513-782-4807

IT Corporation is a wholly owned subsidiary of International Technology Corporation

IT CORPORATION

PROJECT

EQUIPMENT INSPECTION LOG

Equipment Type: 905 Belco (Harry's)

Equipment Supplier: Harry

I.D. #:

Date: 05-04-95

BRAKES	✓	COOLING WATER	✓
Breather AIR SYSTEM	✓	OPERATING CONTROLS	✓
TIRES/TRACKS	✓	LIGHTS/REFLECTORS	✓
HORN	✓	WINDSHIELD WIPERS	✓
SAFETY DEVICES	✓	FIRE EXTINGUISHER	✓
GLASS	✓	BACKUP ALARM	✓
MIRRORS	✓	ENGINE OIL ✓	Add/Check NO
DEFROSTER	✓	EXHAUST SYSTEM	✓
STEERING SYSTEM	✓	FLUID LEVELS	✓
WIRE ROPE	N/A	MAINTAINENCE MANUALS	N/A
APPEARANCE	Ugly	OPERATING MANUALS	N/A
ELECTRICAL SYSTEM	✓	LOAD CHARTS	N/A
INSPECTOR:	Apple / Hopkins	DATE:	05-04-95
APPROVED:	Frank M. [illegible] Jr. (HEALTH & SAFETY)	DATE:	5-4-1995

PHOTOGRAPHS TAKEN

IT CORPORATION

PROJECT

EQUIPMENT INSPECTION LOG

Equipment Type: Cat Track Hoe

Equipment Supplier: SS

I.D. #:

Date: 05-04-95

BRAKES	✓	COOLING WATER	✓
AIR SYSTEM	N/A	OPERATING CONTROLS	✓
TIRES/TRACKS	✓	LIGHTS/REFLECTORS	✓
HORN	✓	WINDSHIELD WIPERS	✓
SAFETY DEVICES	✓	FIRE EXTINGUISHER	✓
GLASS	Windshield Crack	BACKUP ALARM	✓
MIRRORS	✓	ENGINE OIL ✓	ADD/ORDER N/A
DEFROSTER	✓	EXHAUST SYSTEM	✓
STEERING SYSTEM	✓	FLUID LEVELS	✓
WIRE ROPE	N/A	MAINTAINENCE MANUALS	✓
APPEARANCE	Used	OPERATING MANUALS	✓
ELECTRICAL SYSTEM	✓	LOAD CHARTS	N/A
INSPECTOR:		DATE:	05-04-95
APPROVED:	Frank [illegible] (HEALTH & SAFETY)	DATE:	05-04-95

PHOTOGRAPHS TAKEN

IT CORPORATION

PROJECT

EQUIPMENT INSPECTION LOG

Equipment Type: [illegible]

Equipment Supplier: [illegible]

I.D. #:

Date: [illegible]

BRAKES	✓	COOLING WATER	✓
AIR SYSTEM	✓	OPERATING CONTROLS	✓
TIRES/TRACKS	X Left Front Flat	LIGHTS/REFLECTORS	✓
HORN	✓	WINDSHIELD WIPERS	✓
SAFETY DEVICES	✓	FIRE EXTINGUISHER	✓
GLASS	✓	BACKUP ALARM	✓
MIRRORS	✓	ENGINE OIL ✓	Add/Check [illegible]
DEFROSTER	✓	EXHAUST SYSTEM	✓
STEERING SYSTEM	✓	FLUID LEVELS	✓
WIRE ROPE	X	MAINTAINENCE MANUALS	✓
APPEARANCE	✓	OPERATING MANUALS	✓
ELECTRICAL SYSTEM	✓	LOAD CHARTS	✓
INSPECTOR	[illegible]	DATE:	[illegible]
APPROVED	Frank M. Vale Jr. (HEALTH & SAFETY)	DATE:	5-3-1995

PHOTOGRAPHS TAKEN No

IT CORPORATION

PROJECT

EQUIPMENT INSPECTION LOG

Equipment Type: _____

Equipment Supplier: _____

I.D. #: _____

Date: _____

BRAKES	✓	COOLING WATER	✓
AIR SYSTEM	✓	OPERATING CONTROLS	✓
TIRES/TRACKS	✓	LIGHTS/REFLECTORS	✓
HORN	✓	WINDSHIELD WIPERS	✓
SAFETY DEVICES	✓	FIRE EXTINGUISHER	✓
GUARDS	✓	BACKUP ALARM	✓
MIRRORS	✓	ENGINE OIL ✓	Add/Check
DEFROSTER	✓	EXHAUST SYSTEM	✓
STEERING SYSTEM	✓	FLUID LEVELS	✓
WIRE ROPE	✓	MAINTAINENCE MANUALS	✓
APPEARANCE	✓	OPERATING MANUALS	✓
ELECTRICAL SYSTEM	✓	LOAD CHARTS	✓
INSPECTOR	[illegible]	DATE	[illegible]

APPROVED: Frank [illegible] — HEALTH & SAFETY

DATE: 5-8-1995

PHOTOGRAPHS TAKEN

IT CORPORATION

PROJECT

EQUIPMENT INSPECTION LOG

Equipment Type: [illegible]

Equipment Supplier: Harry Fair

I.D. #: [illegible]

Date: 5-8-95

BRAKES	✓	COOLING WATER	✓
AIR SYSTEM	✓	OPERATING CONTROLS	✓
TIRES/TRACKS	✓	LIGHTS/REFLECTORS	✓
HORN	✓	WINDSHIELD WIPERS	✓
SAFETY DEVICES	✓	FIRE EXTINGUISHER	✓
GLASS	✓	BACKUP ALARM	✓
MIRRORS	✓	ENGINE OIL	Add/Check: ✓
DEFROSTER	✓	EXHAUST SYSTEM	✓
STEERING SYSTEM	✓	FLUID LEVELS	✓
WIRE ROPE	✓	MAINTAINENCE MANUALS	
APPEARANCE	✓	OPERATING MANUALS	
ELECTRICAL SYSTEM	✓	LOAD CHARTS	

INSPECTOR [signature] DATE 5-8-95

APPROVED Frank M. Vick Jr. DATE 5-8-1995

(HEALTH & SAFETY

PHOTOGRAPHS TAKEN

IT CORPORATION

PROJECT

EQUIPMENT INSPECTION LOG

Equipment Type: Trackhoe

Equipment Supplier: Harry Farr

Unit: Kobelco

Date: 5-9-95

BRAKES	✓	COOLING WATER	✓
AIR SYSTEM	✓	OPERATING CONTROLS	✓
TIRES/TRACKS	✓	LIGHTS/REFLECTORS	✓
HORN	✓	WINDSHIELD WIPERS	✓
SAFETY DEVICES	✓	FIRE EXTINGUISHER	
GLASS	✓	BACKUP ALARM	✓
MIRRORS	✓	ENGINE OIL	GREASE/GREASE ✓
DEFROSTER	✓	EXHAUST SYSTEM	✓
STEERING SYSTEM	✓	FLUID LEVELS	✓
WIRE ROPE	✓	MAINTAINENCE MANUALS	
APPEARANCE	✓	OPERATING MANUALS	
ELECTRICAL SYSTEM	✓	LOAD CHARTS	

INSPECTOR: [signature] DATE: 5-9-95

APPROVED: Frank M. Vish Jr. DATE: 5-9-1995

(HEALTH & SAFETY)

PHOTOGRAPHS TAKEN

IT CORPORATION

PROJECT

EQUIPMENT INSPECTION LOG

Equipment Type: 120 CAT - Tract Hoe

Equipment Supplier: Syracuse Supply

I.D. #: C.T

Date: 5-11-95

BRAKES	✓	COOLING WATER	✓
AIR SYSTEM	✓	OPERATING CONTROLS	✓
TIRES/TRACKS	✓	LIGHTS/REFLECTORS	✓
HORN	✓	WINDSHIELD WIPERS	✓
SAFETY DEVICES	✓	FIRE EXTINGUISHER	✓
GLASS	✓ Broken	BACKUP ALARM	✓
MIRRORS	✓	ENGINE OIL	✓ Add/Check OK
DEFROSTER	✓	EXHAUST SYSTEM	✓
STEERING SYSTEM	✓	FLUID LEVELS	✓
WIRE ROPE	✓	MAINTAINENCE MANUALS	✓
APPEARANCE	✓	OPERATING MANUALS	✓
ELECTRICAL SYSTEM	✓	LOAD CHARTS	✓
INSPECTOR:	Harry Lau	DATE:	5-11-1995
APPROVED:	Frank M. Nash Jr. (HEALTH & SAFETY)	DATE:	5-11-1995

PHOTOGRAPHS TAKEN

IT CORPORATION

PROJECT

EQUIPMENT INSPECTION LOG

Equipment Type: D5 dozer

Equipment Supplier: SS

I.D. #:

Date: 5-11-1995

BRAKES	✓	COOLING WATER	✓
AIR SYSTEM	✓	OPERATING CONTROLS	✓
TIRES/TRACKS	✓	LIGHTS/REFLECTORS	✓
HORN	✓	WINDSHIELD WIPERS	✓
SAFETY DEVICES	✓	FIRE EXTINGUISHER	✓
GLASS	✓	BACKUP ALARM	✓
MIRRORS	✓	ENGINE OIL	Add/Check ✓
DEFROSTER	✓	EXHAUST SYSTEM	✓
STEERING SYSTEM	✓	FLUID LEVELS	Lost cap on oil tank
WIRE ROPE	NA	MAINTAINENCE MANUALS	✓
APPEARANCE	good	OPERATING MANUALS	✓
ELECTRICAL SYSTEM	✓	LOAD CHARTS	NA
INSPECTOR	[illegible]	DATE:	5-11-95
APPROVED:	Frank M [illegible] Jr. (HEALTH & SAFETY)	DATE:	5-11-95

PHOTOGRAPHS TAKEN

IT CORPORATION

PROJECT

EQUIPMENT INSPECTION LOG

Equipment Type: Loader IT 18 F

Equipment Supplier: Syracuse Supply

I.D. #: CaT

Date: 5-11-95

BRAKES ✓	COOLING WATER ✓
AIR SYSTEM ✓	OPERATING CONTROLS ✓
TIRES/TRACKS ✓	LIGHTS/REFLECTORS ✓
HORN ✓	WINDSHIELD WIPERS ✓
SAFETY DEVICES ✓	FIRE EXTINGUISHER
GLASS ✓	BACKUP ALARM ✓
MIRRORS ✓	ENGINE OIL ✓ Add/Check
DEFROSTER ✓	EXHAUST SYSTEM ✓
STEERING SYSTEM ✓	FLUID LEVELS ✓
WIRE ROPE ✓	MAINTAINENCE MANUALS ✓
APPEARANCE ✓	OPERATING MANUALS ✓
ELECTRICAL SYSTEM ✓	LOAD CHARTS ✓

INSPECTOR: Brian Callis DATE: 5-11-95

APPROVED: Frank N Vick Jr. DATE: 5-11-1995

(HEALTH & SAFETY)

PHOTOGRAPHS TAKEN

T CORPORATION

PROJECT M

EQUIPMENT INSPECTION LOG

Equipment Type: Trackhoe

Equipment Supplier: Harry Farr

Unit: Koehler

Date: 5-10-95

BRAKES	✓	COOLING WATER	✓
AIR SYSTEM	✓	OPERATING CONTROLS	✓
TIRES/TRACKS	✓	LIGHTS/REFLECTORS	✓
HORN	✓	WINDSHIELD WIPERS	✓
SAFETY DEVICES	✓	FIRE EXTINGUISHER	
GLASS	✓	BACKUP ALARM	✓
MIRRORS	✓	ENGINE OIL	Add/Check ✓
DEFROSTER	✓	EXHAUST SYSTEM	✓
STEERING SYSTEM	✓	FLUID LEVELS	✓
WIRE ROPE	✓	MAINTAINENCE MANUALS	
APPEARANCE	✓	OPERATING MANUALS	
ELECTRICAL SYSTEM		LOAD CHARTS	

INSPECTOR: [signature] DATE: 5-10-95

APPROVED: Frank M. Vok Jr. (HEALTH & SAFETY) DATE: 5-11-1995

PHOTOGRAPHS TAKEN

IT CORPORATION

PROJECT

EQUIPMENT INSPECTION LOG

Equipment Type: Loader 966F

Equipment Supplier: Syracuse Supply

I.D. #: 1 of

Date: 5-11-95

BRAKES	✓	COOLING WATER	✓
AIR SYSTEM	✓	OPERATING CONTROLS	✓
TIRES/TRACKS	✓	LIGHTS/REFLECTORS	✓
HORN	✓	WINDSHIELD WIPERS	✓
SAFETY DEVICES	✓	FIRE EXTINGUISHER	
GLASS	✓	BACKUP ALARM	✓
MIRRORS	✓	ENGINE OIL	✓ Add/Check
DEFROSTER	✓	EXHAUST SYSTEM	✓
STEERING SYSTEM	✓	FLUID LEVELS	✓
WIRE ROPE	✓	MAINTAINENCE MANUALS	✓
APPEARANCE	✓	OPERATING MANUALS	✓
ELECTRICAL SYSTEM	✓	LOAD CHARTS	✓
INSPECTOR:	Brian Callis	DATE:	5-11-95
APPROVED: (HEALTH & SAFETY)	Frank M. Vick Jr.	DATE:	5-11-1995
PHOTOGRAPHS TAKEN			

IT CORPORATION

PROJECT

EQUIPMENT INSPECTION LOG

Equipment Type: loader

Equipment Supplier: SS

I.D. #: 966F

Date: 5-16-95

BRAKES	✓	COOLING WATER	✓
AIR SYSTEM	✓	OPERATING CONTROLS	✓
TIRES/TRACKS	✓	LIGHTS/REFLECTORS	✓
HORN	✓	WINDSHIELD WIPERS	✓
SAFETY DEVICES	✓	FIRE EXTINGUISHER	✓
GLASS	✓	BACKUP ALARM	✓
MIRRORS	✓	ENGINE OIL Add/Check	✓
DEFROSTER	✓	EXHAUST SYSTEM	✓
STEERING SYSTEM	✓	FLUID LEVELS	✓
WIRE ROPE	✓	MAINTAINENCE MANUALS	✓
APPEARANCE	✓	OPERATING MANUALS	
ELECTRICAL SYSTEM	✓	LOAD CHARTS	
INSPECTOR: [signature]		DATE: 5-16-95	
APPROVED: [signature] (HEALTH & SAFETY)		DATE: 5-16-1995	
PHOTOGRAPHS TAKEN			

IT CORPORATION

PROJECT

EQUIPMENT INSPECTION LOG

Equipment Type: Dozer

Equipment Supplier: SS

I.D. #: D5LGP

Date: 5-16-95

BRAKES	/	COOLING WATER	/
AIR SYSTEM	/	OPERATING CONTROLS	/
TIRES/TRACKS	/	LIGHTS/REFLECTORS	/
HORN	/	WINDSHIELD WIPERS	/
SAFETY DEVICES	/	FIRE EXTINGUISHER	/
GLASS	/	BACKUP ALARM	/
MIRRORS	/	ENGINE OIL Add/Check	/
DEFROSTER	/	EXHAUST SYSTEM	/
STEERING SYSTEM	/	FLUID LEVELS	/
WIRE ROPE	/	MAINTAINENCE MANUALS	
APPEARANCE	/	OPERATING MANUALS	
ELECTRICAL SYSTEM	/	LOAD CHARTS	
INSPECTOR: [signature]		DATE: 5-16-95	
APPROVED: _____ (HEALTH & SAFETY)		DATE: _____	
PHOTOGRAPHS TAKEN			

IT CORPORATION

PROJECT

EQUIPMENT INSPECTION LOG

Equipment Type: loader

Equipment Supplier: SS

I.D. #: JT18

Date: 5-15-95

BRAKES	✓	COOLING WATER	✓
AIR SYSTEM	✓	OPERATING CONTROLS	✓
TIRES/TRACKS	✓	LIGHTS/REFLECTORS	✓
HORN	✓	WINDSHIELD WIPERS	✓
SAFETY DEVICES	✓	FIRE EXTINGUISHER	✓
GLASS	✓	BACKUP ALARM	✓
MIRRORS	✓	ENGINE OIL Add/Check	✓
DEFROSTER	✓	EXHAUST SYSTEM	✓
STEERING SYSTEM	✓	FLUID LEVELS	✓
WIRE ROPE	✓	MAINTAINENCE MANUALS	✓
APPEARANCE	✓	OPERATING MANUALS	✓
ELECTRICAL SYSTEM	✓	LOAD CHARTS	✓
INSPECTOR: [signature]		DATE: 5-15-95	
APPROVED: [signature] (HEALTH &SAFETY)		DATE: 5-15-1995	
PHOTOGRAPHS TAKEN			

IT CORPORATION

PROJECT

EQUIPMENT INSPECTION LOG

Equipment Type: Dozer

Equipment Supplier: SS

I.D. #: D5LGP

Date: 5-15-95

BRAKES	✓	COOLING WATER	✓
AIR SYSTEM	✓	OPERATING CONTROLS	✓
TIRES/TRACKS	✓	LIGHTS/REFLECTORS	✓
HORN	✓	WINDSHIELD WIPERS	✓
SAFETY DEVICES	✓	FIRE EXTINGUISHER	✓
GLASS	✓	BACKUP ALARM	✓
MIRRORS	✓	ENGINE OIL - Add/Check	✓
DEFROSTER	✓	EXHAUST SYSTEM	✓
STEERING SYSTEM	✓	FLUID LEVELS	✓
WIRE ROPE	✓	MAINTAINENCE MANUALS	✓
APPEARANCE	✓	OPERATING MANUALS	
ELECTRICAL SYSTEM	✓	LOAD CHARTS	
INSPECTOR: [signature]		DATE: 5/15/95	
APPROVED: Frank M Vick (HEALTH & SAFETY)		DATE: 5-15-1995	
PHOTOGRAPHS TAKEN			

IT CORPORATION

PROJECT

EQUIPMENT INSPECTION LOG

Equipment Type: loader

Equipment Supplier: SS

I.D. #: 966F

Date: 5-15-95

BRAKES	✓	COOLING WATER	✓
AIR SYSTEM	✓	OPERATING CONTROLS	✓
TIRES/TRACKS	✓	LIGHTS/REFLECTORS	✓
HORN	✓	WINDSHIELD WIPERS	✓
SAFETY DEVICES	✓	FIRE EXTINGUISHER	✓
GLASS	✓	BACKUP ALARM	✓
MIRRORS	✓	ENGINE OIL Add/Check	✓
DEFROSTER	✓	EXHAUST SYSTEM	✓
STEERING SYSTEM	✓	FLUID LEVELS	✓
WIRE ROPE	✓	MAINTAINENCE MANUALS	✓
APPEARANCE	✓	OPERATING MANUALS	
ELECTRICAL SYSTEM	✓	LOAD CHARTS	
INSPECTOR: [signature]		DATE: 5-15-95	
APPROVED: [signature] (HEALTH & SAFETY)		DATE: 5-15-1995	
PHOTOGRAPHS TAKEN			

IT CORPORATION

PROJECT

EQUIPMENT INSPECTION LOG

Equipment Type: Front End loader

Equipment Supplier: SSS

I.D. #: 966F

Date: 5-3-95

BRAKES	✓	COOLING WATER	✓
AIR SYSTEM	✓	OPERATING CONTROLS	✓
TIRES/TRACKS	✓	LIGHTS/REFLECTORS	✓
HORN	✓	WINDSHIELD WIPERS	✓
SAFETY DEVICES	✓	FIRE EXTINGUISHER	✓
GLASS	✓	BACKUP ALARM	✓
MIRRORS	✓	ENGINE OIL	Add/Check ✓
DEFROSTER	✓	EXHAUST SYSTEM	✓
STEERING SYSTEM	✓	FLUID LEVELS	✓
WIRE ROPE	✓	MAINTAINENCE MANUALS	
APPEARANCE	✓	OPERATING MANUALS	
ELECTRICAL SYSTEM	✓	LOAD CHARTS	

INSPECTOR: Michael L. Hurtle DATE: 5-3-95

APPROVED: Frank M. Vick Jr. DATE: 5-3-1995

(HEALTH & SAFETY)

PHOTOGRAPHS TAKEN

IT CORPORATION

PROJECT

EQUIPMENT INSPECTION LOG

Equipment Type: Front End loader

Equipment Supplier: SSS

I.D. #: IT18F

Date: 5-3-95

BRAKES	✓	COOLING WATER	✓
AIR SYSTEM	✓	OPERATING CONTROLS	✓
TIRES/TRACKS	✓	LIGHTS/REFLECTORS	✓
HORN	✓	WINDSHIELD WIPERS	✓
SAFETY DEVICES	✓	FIRE EXTINGUISHER	✓
GLASS	✓	BACKUP ALARM	✓
MIRRORS	✓	ENGINE OIL Add/Check	✓
DEFROSTER	✓	EXHAUST SYSTEM	✓
STEERING SYSTEM	✓	FLUID LEVELS	✓
WIRE ROPE	✓	MAINTAINENCE MANUALS	
APPEARANCE	✓	OPERATING MANUALS	
ELECTRICAL SYSTEM	✓	LOAD CHARTS	

INSPECTOR: [signature] DATE: 5-3-95

APPROVED: [signature] DATE: 5-3-1995

(HEALTH & SAFETY)

PHOTOGRAPHS TAKEN

IT CORPORATION

PROJECT

EQUIPMENT INSPECTION LOG

Equipment Type: Dozer

Equipment Supplier: SSS

I.D. #: D5LGP

Date: 5-3-95

BRAKES	✓	COOLING WATER	✓
AIR SYSTEM	✓	OPERATING CONTROLS	✓
TIRES/TRACKS	✓	LIGHTS/REFLECTORS	✓
HORN	✓	WINDSHIELD WIPERS	✓
SAFETY DEVICES	✓	FIRE EXTINGUISHER	needs 1
GLASS	✓	BACKUP ALARM	✓
MIRRORS	✓	ENGINE OIL	Add/Check ✓
DEFROSTER	✓	EXHAUST SYSTEM	✓
STEERING SYSTEM	✓	FLUID LEVELS	✓
WIRE ROPE	✓	MAINTAINENCE MANUALS	
APPEARANCE	✓	OPERATING MANUALS	
ELECTRICAL SYSTEM		LOAD CHARTS	

INSPECTOR: Michael F. [illegible] DATE: 5-3-95

APPROVED: Frank M. Vick Jr. DATE: 5-3-1995

(HEALTH & SAFETY)

PHOTOGRAPHS TAKEN

IT CORPORATION

PROJECT

EQUIPMENT INSPECTION LOG

Equipment Type: E 120B Track Hoe

Equipment Supplier: SSS

I.D. #: E 120 B

Date: 5-3-95

BRAKES	✓	COOLING WATER	✓
AIR SYSTEM	✓	OPERATING CONTROLS	✓
TIRES/TRACKS	✓	LIGHTS/REFLECTORS	✓
HORN	✓	WINDSHIELD WIPERS	✓
SAFETY DEVICES	✓	FIRE EXTINGUISHER	Needs 1
GLASS	✓	BACKUP ALARM	✓
MIRRORS	✓	ENGINE OIL	Add/Check ✓
DEFROSTER	✓	EXHAUST SYSTEM	✓
STEERING SYSTEM	✓	FLUID LEVELS	✓
WIRE ROPE	✓	MAINTAINENCE MANUALS	✓
APPEARANCE	✓	OPERATING MANUALS	✓
ELECTRICAL SYSTEM	✓	LOAD CHARTS	

INSPECTOR: Michael L Stubbs DATE: 5-3-95

APPROVED: Frank M. Vick Jr. DATE: 5-3-1995
(HEALTH & SAFETY)

PHOTOGRAPHS TAKEN

IT CORPORATION

PROJECT

EQUIPMENT INSPECTION LOG

Equipment Type: Trackhoe

Equipment Supplier: Harry Fair

I.D. #: Kobelco

Date: 5-3-95

BRAKES	✓	COOLING WATER	✓
AIR SYSTEM	✓	OPERATING CONTROLS	✓
TIRES/TRACKS	✓	LIGHTS/REFLECTORS	✓
HORN	✓	WINDSHIELD WIPERS	✓
SAFETY DEVICES	✓	FIRE EXTINGUISHER	✓
GLASS	✓	BACKUP ALARM	✓
MIRRORS	✓	ENGINE OIL Add/Check	✓
DEFROSTER	✓	EXHAUST SYSTEM	✓
STEERING SYSTEM	✓	FLUID LEVELS	✓
WIRE ROPE	✓	MAINTAINENCE MANUALS	
APPEARANCE	✓	OPERATING MANUALS	
ELECTRICAL SYSTEM	✓	LOAD CHARTS	
INSPECTOR: [signature]		DATE: 5-3-95	
APPROVED: [signature] (HEALTH &SAFETY)		DATE: 5-3-1995	
PHOTOGRAPHS TAKEN			

IT CORPORATION

PROJECT

EQUIPMENT INSPECTION LOG

Equipment Type: Dozer

Equipment Supplier: SS

ID #: DS LGP

Date: 5-13-95

BRAKES	✓	COOLING WATER	✓
AIR SYSTEM	✓	OPERATING CONTROLS	✓
TIRES/TRACKS	✓	LIGHTS/REFLECTORS	✓
HORN	✓	WINDSHIELD WIPERS	✓
SAFETY DEVICES	✓	FIRE EXTINGUISHER	✓
GLASS	✓	BACKUP ALARM	✓
MIRRORS	✓	ENGINE OIL	Add/Check ✓
DEFROSTER	✓	EXHAUST SYSTEM	✓
STEERING SYSTEM	✓	FLUID LEVELS	✓
WIRE ROPE	✓	MAINTAINENCE MANUALS	✓
APPEARANCE	✓	OPERATING MANUALS	
ELECTRICAL SYSTEM	✓	LOAD CHARTS	

INSPECTOR: [signature] DATE: 5-13-95

APPROVED: [signature] DATE: 5-13-1995

(HEALTH & SAFETY)

PHOTOGRAPHS TAKEN

IT CORPORATION

PROJECT

EQUIPMENT INSPECTION LOG

Equipment Type: Loader

Equipment Supplier: SS

I.D. #: 966

Date: 5-13-95

BRAKES	✓	COOLING WATER	✓
AIR SYSTEM	✓	OPERATING CONTROLS	✓
TIRES/TRACKS	✓	LIGHTS/REFLECTORS	✓
HORN	✓	WINDSHIELD WIPERS	✓
SAFETY DEVICES	✓	FIRE EXTINGUISHER	✓
GLASS	✓	BACKUP ALARM	✓
MIRRORS	✓	ENGINE OIL	Add/Check ✓
DEFROSTER	✓	EXHAUST SYSTEM	✓
STEERING SYSTEM	✓	FLUID LEVELS	✓
WIRE ROPE	✓	MAINTAINENCE MANUALS	✓
APPEARANCE	✓	OPERATING MANUALS	
ELECTRICAL SYSTEM	✓	LOAD CHARTS	
INSPECTOR	Michael A. Stubler	DATE:	5-13-95
APPROVED (HEALTH & SAFETY)	Frank M. Vock Jr.	DATE:	5-13-1995
PHOTOGRAPHS TAKEN			

IT CORPORATION

PROJECT

EQUIPMENT INSPECTION LOG

Equipment Type: Loader

Equipment Supplier: SS

ID #: IT18

Date: 5-13-95

BRAKES	✓	COOLING WATER	✓
AIR SYSTEM	✓	OPERATING CONTROLS	✓
TIRES/TRACKS	✓	LIGHTS/REFLECTORS	✓
HORN	✓	WINDSHIELD WIPERS	✓
SAFETY DEVICES	✓	FIRE EXTINGUISHER	✓
GLASS	✓	BACKUP ALARM	✓
MIRRORS	✓	ENGINE OIL	Add/Check ✓
DEFROSTER	✓	EXHAUST SYSTEM	✓
STEERING SYSTEM	✓	FLUID LEVELS	✓
WIRE ROPE	✓	MAINTAINENCE MANUALS	✓
APPEARANCE	✓	OPERATING MANUALS	
ELECTRICAL SYSTEM		LOAD CHARTS	
INSPECTOR	Michael [illegible]	DATE:	5-13-95
APPROVED	Frank M. Vick Jr. (HEALTH & SAFETY)	DATE:	5-13-1995
PHOTOGRAPHS TAKEN			

IT CORPORATION

PROJECT

EQUIPMENT INSPECTION LOG

Equipment Type: loader

Equipment Supplier: SS

I.D. #: IT18

Date: 5-14-95

BRAKES	✓	COOLING WATER	✓
AIR SYSTEM	✓	OPERATING CONTROLS	✓
TIRES/TRACKS	✓	LIGHTS/REFLECTORS	✓
HORN	✓	WINDSHIELD WIPERS	✓
SAFETY DEVICES	✓	FIRE EXTINGUISHER	✓
GLASS	✓	BACKUP ALARM	✓
MIRRORS	✓	ENGINE OIL Add/Check	✓
DEFROSTER	✓	EXHAUST SYSTEM	✓
STEERING SYSTEM	✓	FLUID LEVELS	✓
WIRE ROPE	✓	MAINTAINENCE MANUALS	✓
APPEARANCE	✓	OPERATING MANUALS	
ELECTRICAL SYSTEM	✓	LOAD CHARTS	

INSPECTOR: [signature] DATE: 5-14-95

APPROVED: [signature] DATE: 5-14-1995

(HEALTH & SAFETY)

PHOTOGRAPHS TAKEN

IT CORPORATION

PROJECT

EQUIPMENT INSPECTION LOG

Equipment Type: Dozer

Equipment Supplier: SS

I.D. #: DSLGP

Date: 5-14-95

BRAKES	✓	COOLING WATER	—
AIR SYSTEM	—	OPERATING CONTROLS	✓
TIRES/TRACKS	—	LIGHTS/REFLECTORS	✓
HORN	—	WINDSHIELD WIPERS	—
SAFETY DEVICES	—	FIRE EXTINGUISHER	✓
GLASS	—	BACKUP ALARM	✓
MIRRORS	—	ENGINE OIL Add/Check	—
DEFROSTER	—	EXHAUST SYSTEM	—
STEERING SYSTEM	✓	FLUID LEVELS	✓
WIRE ROPE	—	MAINTAINENCE MANUALS	—
APPEARANCE	✓	OPERATING MANUALS	
ELECTRICAL SYSTEM	—	LOAD CHARTS	
INSPECTOR	[signature]	DATE: 5-14-95	
APPROVED (HEALTH & SAFETY)	[signature]	DATE: 5-14-1995	
PHOTOGRAPHS TAKEN			

IT CORPORATION

PROJECT

EQUIPMENT INSPECTION LOG

Equipment Type: loader

Equipment Supplier: SS

I.D. #: 966

Date: 5-14-95

BRAKES	✓	COOLING WATER	✓
AIR SYSTEM	✓	OPERATING CONTROLS	✓
TIRES/TRACKS	✓	LIGHTS/REFLECTORS	✓
HORN	✓	WINDSHIELD WIPERS	✓
SAFETY DEVICES	✓	FIRE EXTINGUISHER	✓
GLASS	✓	BACKUP ALARM	✓
MIRRORS	✓	ENGINE OIL	Add/Check ✓
DEFROSTER	✓	EXHAUST SYSTEM	✓
STEERING SYSTEM	✓	FLUID LEVELS	✓
WIRE ROPE	✓	MAINTAINENCE MANUALS	✓
APPEARANCE	✓	OPERATING MANUALS	
ELECTRICAL SYSTEM	✓	LOAD CHARTS	
INSPECTOR:	[signature]	DATE:	5-14-95
APPROVED:	[signature] (HEALTH & SAFETY)	DATE:	5-14-1995
PHOTOGRAPHS TAKEN			

IT CORPORATION

PROJECT

EQUIPMENT INSPECTION LOG

Equipment Type: LOADER

Equipment Supplier: S.S.C.

I.D. #: 966 F

Date: 5-17-95

BRAKES	✓	COOLING WATER	✓
AIR SYSTEM	✓	OPERATING CONTROLS	✓
TIRES/TRACKS	✓	LIGHTS/REFLECTORS	✓
HORN	✓	WINDSHIELD WIPERS	✓
SAFETY DEVICES	✓	FIRE EXTINGUISHER	✓
GLASS	✓	BACKUP ALARM	✓
MIRRORS	✓	ENGINE OIL ✓	Add/Check ✓
DEFROSTER	✓	EXHAUST SYSTEM	✓
STEERING SYSTEM	✓	FLUID LEVELS	✓
WIRE ROPE	NA	MAINTAINENCE MANUALS	✓
APPEARANCE	✓	OPERATING MANUALS	✓
ELECTRICAL SYSTEM	✓	LOAD CHARTS	✓

INSPECTOR: A Moore DATE: 5-17-95

APPROVED: Frank M. Vick Jr. DATE: 5-17-1995

(HEALTH & SAFETY)

PHOTOGRAPHS TAKEN

IT CORPORATION

PROJECT

EQUIPMENT INSPECTION LOG

Equipment Type: Dozer

Equipment Supplier: SS

I.D. #: D5LGP

Date: 5-17-95

BRAKES	✓	COOLING WATER	✓
AIR SYSTEM	✓	OPERATING CONTROLS	✓
TIRES/TRACKS	✓	LIGHTS/REFLECTORS	✓
HORN	✓	WINDSHIELD WIPERS	✓
SAFETY DEVICES	✓	FIRE EXTINGUISHER	✓
GLASS	✓	BACKUP ALARM	✓
MIRRORS	✓	ENGINE OIL Add/Check	✓
DEFROSTER	✓	EXHAUST SYSTEM	✓
STEERING SYSTEM	✓	FLUID LEVELS	✓
WIRE ROPE	✓	MAINTAINENCE MANUALS	✓
APPEARANCE	✓	OPERATING MANUALS	
ELECTRICAL SYSTEM	✓	LOAD CHARTS	
INSPECTOR	[signature]	DATE: 5-17-95	
APPROVED: [signature] (HEALTH & SAFETY)		DATE: 5-17-1995	
PHOTOGRAPHS TAKEN			

IT CORPORATION

PROJECT

EQUIPMENT INSPECTION LOG

Equipment Type: loader

Equipment Supplier: SS

I.D. #: 966 F

Date: 5-17-95

BRAKES	✓	COOLING WATER	✓
AIR SYSTEM	✓	OPERATING CONTROLS	✓
TIRES/TRACKS	✓	LIGHTS/REFLECTORS	✓
HORN	✓	WINDSHIELD WIPERS	✓
SAFETY DEVICES	✓	FIRE EXTINGUISHER	✓
GLASS	✓	BACKUP ALARM	✓
MIRRORS	✓	ENGINE OIL	Add/Check ✓
DEFROSTER	✓	EXHAUST SYSTEM	✓
STEERING SYSTEM	✓	FLUID LEVELS	✓
WIRE ROPE	✓	MAINTAINENCE MANUALS	✓
APPEARANCE	✓	OPERATING MANUALS	
ELECTRICAL SYSTEM	✓	LOAD CHARTS	

INSPECTOR: [signature] DATE: 5/17/95

APPROVED: Frank M. Vish Jr. DATE: 5-17-1995

(HEALTH & SAFETY)

PHOTOGRAPHS TAKEN

IT CORPORATION

PROJECT

EQUIPMENT INSPECTION LOG

Equipment Type: loader

Equipment Supplier: SS

I.D. #: II 18

Date: 5-17-95

BRAKES	✓	COOLING WATER	✓
AIR SYSTEM	✓	OPERATING CONTROLS	✓
TIRES/TRACKS	✓	LIGHTS/REFLECTORS	✓
HORN	✓	WINDSHIELD WIPERS	✓
SAFETY DEVICES	✓	FIRE EXTINGUISHER	✓
GLASS	✓	BACKUP ALARM	✓
MIRRORS	✓	ENGINE OIL	Add/Check ✓
DEFROSTER	✓	EXHAUST SYSTEM	✓
STEERING SYSTEM	✓	FLUID LEVELS	✓
WIRE ROPE	✓	MAINTAINENCE MANUALS	✓
APPEARANCE	✓	OPERATING MANUALS	
ELECTRICAL SYSTEM		LOAD CHARTS	
INSPECTOR: [signature]		DATE: 5-17-95	
APPROVED: Frank M Vahl Jr. (HEALTH & SAFETY)		DATE: 5-17-1995	

PHOTOGRAPHS TAKEN

IT CORPORATION

PROJECT

EQUIPMENT INSPECTION LOG

Equipment Type: LOADER

Equipment Supplier: S.S.C

I.D. #: 966 F

Date: 5-18-95

BRAKES	✓	COOLING WATER	✓
AIR SYSTEM	✓	OPERATING CONTROLS	✓
TIRES/TRACKS	✓	LIGHTS/REFLECTORS	✓
HORN	✓	WINDSHIELD WIPERS	✓
SAFETY DEVICES	✓	FIRE EXTINGUISHER	✓
GLASS	✓	BACKUP ALARM	✓
MIRRORS	✓	ENGINE OIL	✓ Add/Change ✓
DEFROSTER	✓	EXHAUST SYSTEM	✓
STEERING SYSTEM	✓	FLUID LEVELS	✓
WIRE ROPE	✓	MAINTAINENCE MANUALS	✓
APPEARANCE	✓	OPERATING MANUALS	✓
ELECTRICAL SYSTEM	✓	LOAD CHARTS	✓

INSPECTOR: J Moore DATE: 5-18-95

APPROVED: Frank M Vail Jr (HEALTH & SAFETY) DATE: 5-18-1995

PHOTOGRAPHS TAKEN

IT CORPORATION

PROJECT

EQUIPMENT INSPECTION LOG

Equipment Type: LOADER

Equipment Supplier: S.S.C

I.D. #: DT 18 F

Date:

BRAKES	✓	COOLING WATER	✓
AIR SYSTEM	✓	OPERATING CONTROLS	✓
TIRES/TRACKS	✓	LIGHTS/REFLECTORS	✓
HORN	✓	WINDSHIELD WIPERS	✓
SAFETY DEVICES	✓	FIRE EXTINGUISHER	✓
GLASS	✓	BACKUP ALARM	✓
MIRRORS	✓	ENGINE OIL	✓ Add/Check ✓
DEFROSTER	✓	EXHAUST SYSTEM	✓
STEERING SYSTEM	✓	FLUID LEVELS	✓
WIRE ROPE	NA	MAINTAINENCE MANUALS	✓
APPEARANCE	✓	OPERATING MANUALS	✓
ELECTRICAL SYSTEM	✓	LOAD CHARTS	✓

INSPECTOR: J Moore DATE: 5-18-95

APPROVED: Frank M Vick Jr. DATE: 5-18-1995

(HEALTH & SAFETY)

PHOTOGRAPHS TAKEN

IT CORPORATION

PROJECT

EQUIPMENT INSPECTION LOG

Equipment Type: Loader

Equipment Number: SS

Unit: LTP8

Date: 5-29-95

BRAKES	✓	COOLING WATER	✓
AIR SYSTEM	✓	OPERATING CONTROLS	✓
TIRES/TRACKS	Right Front Flat	LIGHTS/REFLECTORS	✓
HORN	✓	WINDSHIELD WIPERS	✓
SAFETY DEVICES	✓	FIRE EXTINGUISHER	✓
GLASS	✓	BACKUP ALARM	✓
MIRRORS	✓	ENGINE OIL - Add/Check	✓
DEFROSTER	✓	EXHAUST SYSTEM	✓
STEERING SYSTEM	✓	FLUID LEVELS	✓
WIRE ROPE	✓	MAINTAINENCE MANUALS	
APPEARANCE	✓	OPERATING MANUALS	
ELECTRICAL SYSTEM	✓	LOAD CHARTS	
INSPECTOR	[signature]	DATE: 5-29-1995	
APPROVED	[signature] (HEALTH & SAFETY)	DATE: 5-29-1995	

PHOTOGRAPHS TAKEN

IT CORPORATION

PROJECT

EQUIPMENT INSPECTION LOG

Equipment Type: Dozer

Equipment Supplier: SS

I.D. #: D5LGP

Date: 5-29-95

BRAKES	✓	COOLING WATER	✓
AIR SYSTEM	✓	OPERATING CONTROLS	✓
TIRES/TRACKS	✓	LIGHTS/REFLECTORS	✓
HORN	✓	WINDSHIELD WIPERS	✓
SAFETY DEVICES	✓	FIRE EXTINGUISHER	✓
GLASS	✓	BACKUP ALARM	✓
MIRRORS	✓	ENGINE OIL Add/Check	✓
DEFROSTER	✓	EXHAUST SYSTEM	✓
STEERING SYSTEM	✓	FLUID LEVELS	✓
WIRE ROPE	✓	MAINTAINENCE MANUALS	
APPEARANCE	✓	OPERATING MANUALS	
ELECTRICAL SYSTEM		LOAD CHARTS	
INSPECTOR	[signature]	DATE: 5-29-1995	
APPROVED: (HEALTH & SAFETY)	[signature]	DATE: 5-29-1995	
PHOTOGRAPHS TAKEN			

IT CORPORATION

PROJECT

EQUIPMENT INSPECTION LOG

Equipment Type: Loader

Equipment Supplier: SS

I.D. #: 966E

Date: 5-29-95

BRAKES	✓	COOLING WATER	✓
AIR SYSTEM	✓	OPERATING CONTROLS	✓
TIRES/TRACKS	✓	LIGHTS/REFLECTORS	✓
HORN	✓	WINDSHIELD WIPERS	✓
SAFETY DEVICES	✓	FIRE EXTINGUISHER	✓
GLASS	✓	BACKUP ALARM	✓
MIRRORS	✓	ENGINE OIL - Add/Check	✓
DEFROSTER	✓	EXHAUST SYSTEM	✓
STEERING SYSTEM	✓	FLUID LEVELS	✓
WIRE ROPE	✓	MAINTAINENCE MANUALS	
APPEARANCE	✓	OPERATING MANUALS	
ELECTRICAL SYSTEM	✓	LOAD CHARTS	
INSPECTOR	[signature]	DATE: 5-29-1995	
APPROVED (HEALTH & SAFETY)	Frank M. [signature]	DATE: 5-29-1995	
PHOTOGRAPHS TAKEN			

IT CORPORATION

PROJECT

EQUIPMENT INSPECTION LOG

Equipment Type: loader

Equipment Supplier: SS

I.D. #: JT18

Date: 5-28-95

BRAKES	✓	COOLING WATER	✓
AIR SYSTEM	✓	OPERATING CONTROLS	✓
TIRES/TRACKS	✓	LIGHTS/REFLECTORS	✓
HORN	✓	WINDSHIELD WIPERS	✓
SAFETY DEVICES	✓	FIRE EXTINGUISHER	
GLASS	✓	BACKUP ALARM	✓
MIRRORS	✓	ENGINE OIL Add/Check	✓
DEFROSTER	✓	EXHAUST SYSTEM	✓
STEERING SYSTEM	✓	FLUID LEVELS	✓
WIRE ROPE	✓	MAINTAINENCE MANUALS	
APPEARANCE	✓	OPERATING MANUALS	
ELECTRICAL SYSTEM	✓	LOAD CHARTS	

INSPECTOR: [signature] DATE: 5-28-1995

APPROVED: [signature] DATE: 5-28-1995
(HEALTH & SAFETY)

PHOTOGRAPHS TAKEN

IT CORPORATION

PROJECT

EQUIPMENT INSPECTION LOG

Equipment Type: Dozer

Equipment Supplier: SS

ID #: D5LGP

Date: 5-28-95

BRAKES	✓	COOLING WATER	✓
AIR SYSTEM	✓	OPERATING CONTROLS	✓
TIRES/TRACKS	✓	LIGHTS/REFLECTORS	✓
HORN	✓	WINDSHIELD WIPERS	✓
SAFETY DEVICES	✓	FIRE EXTINGUISHER	
GLASS	✓	BACKUP ALARM	✓
MIRRORS	✓	ENGINE OIL Add/Check	✓
DEFROSTER	✓	EXHAUST SYSTEM	✓
STEERING SYSTEM	✓	FLUID LEVELS	✓
WIRE ROPE	✓	MAINTAINENCE MANUALS	
APPEARANCE	✓	OPERATING MANUALS	
ELECTRICAL SYSTEM	✓	LOAD CHARTS	
INSPECTOR	[signature]	DATE: 5-28-1995	
APPROVED: (HEALTH & SAFETY)	[signature]	DATE: 5-28-1995	
PHOTOGRAPHS TAKEN			

IT CORPORATION

PROJECT

EQUIPMENT INSPECTION LOG

Equipment Type: 966 loader

Equipment Supplier: SS

ID #: ~~[illegible]~~ 966F

Date: 5-28-95

BRAKES	✓	COOLING WATER	✓
AIR SYSTEM	✓	OPERATING CONTROLS	✓
TIRES/TRACKS	✓	LIGHTS/REFLECTORS	✓
HORN	✓	WINDSHIELD WIPERS	✓
SAFETY DEVICES	✓	FIRE EXTINGUISHER	✓
GLASS	✓	BACKUP ALARM	✓
MIRRORS	✓	ENGINE OIL Add/Check	✓
DEFROSTER	✓	EXHAUST SYSTEM	✓
STEERING SYSTEM	✓	FLUID LEVELS	✓
WIRE ROPE	✓	MAINTAINENCE MANUALS	
APPEARANCE	✓	OPERATING MANUALS	
ELECTRICAL SYSTEM	✓	LOAD CHARTS	
INSPECTOR	Michael [illegible]	DATE:	5-28-1995
APPROVED: (HEALTH & SAFETY)	Frank M. [illegible]	DATE:	5-28-1995

PHOTOGRAPHS TAKEN

HYDRAULIC CRANE

MAINTENANCE INSPECTION MANUAL

MODEL 40 Ton

S/N

YEAR 1995

GROVE® cranes worldwide

GROVE

OPERATOR'S AND SAFETY HANDBOOK

Supplement Package(s) No. _____

SUPPLEMENT

This publication supplements the basic Grove Crane Model _____ Operator's and Safety Handbook. The basic Handbook provides coverage of the standard and optional systems/components engineered for this Crane Model. This Supplement contains several Sections which provide coverage for Special Equipment added or modifications made to the basic Crane. Serial Number 70403. The Supplement information supersedes any "like" data in the Operator's and Safety Handbook.

It is important that you take time to thoroughly familiarize yourself with the contents of this supplement. The Supplement must be maintained at the front of the applicable Serial Numbered Crane Operator's and Safety Handbook.

OPERATOR'S AND SAFETY HANDBOOK

TMS 300 SUPERSTRUCTURE

S/N 70403

REVISED: MARCH 1981

CHANGE 2: APRIL 1982

NOTICE

This Manual contains Supplement Package No. 0048. Please consult the Supplement Package before using this manual.

HYDRAULIC CRANE FIELD WORKSHEET

Surveyor Tim Gordon

Date 9/10/94

Job # _____

Customer JPW Riggers and Erectors Phone (315) 432-1111

Address 6376 Thompson Rd. Syracuse NY

Site Contact John Wozniczka Jr. Phone _____

Date / Agency / Number of Last Quad _____

Date / Agency / Number of Last Annual _____

Purpose of Survey: ☐ Quad ☒ Annual ☐ Other _____

Jurisdiction: ☐ 1918.13 ☐ 1926.550 ☐ 1910.180 ☐ Other _____

ANSI Standard: _____ PCSA _____

Description Mobile Hydraulic Type Crane Truck Crane PCSA Class _____

Manufacturer Grove Model # TMS 300 B S/N 70403

Maximum Capacity 40. Ton Owner ID 240

Service Status: ☒ Lifting ☐ Clamshell ☐ Magnet

Documentation: _____ ☐ Accepted ☐ Rejected

- ☐ a) Inspection Records _____
- ☐ b) Maintenance Records _____
- ☐ c) Repair Records _____

Test Loads Applied With Outriggers Set ☐ _____

Test Loads Applied On Rubber ☐ _____

Other Configurements ☐ _____

Fall	# Parts	Radius	Boom Length	Boom Angle	Proof Load	Rated Load

Means of Application of Proof Load: _____

Basis for Assigned Load Ratings: _____

Wire Rope Data _____

(copies of wire rope certification to be attached to this report if inspected under 1918.13)

	No. of Parts	Measured Diameter	No. of Strands	Wires per Strand	LAY: PS	LAY: IPS	LAY: EIPS	LAY: Super EIPS	LAY: RR	LAY: RL	LAY: LR	LAY: LL	LAY: ALT	CORE: FC	CORE: IWRC	CORE: Other	Galvanized: Yes	Galvanized: No	Rotate Resisting: Yes	Rotate Resisting: No	BREAKING STRENGTH IN POUNDS
Main	6	3/4	6	5	☐	☐	☒	☐	☐	☐	☐	☐	☐	☐	☒	☐	☐	☒	☐	☒	
Auxiliary	4	5/8	☐	☐	☐	☐	☒	☐	☐	☐	☐	☐	☐	☐	☒	☐	☐	☒	☒	☐	
Whip	☐		☐	☐	☐	☐	☐	☐	☐	☐	☐	☐	☐	☐	☐	☐	☐	☐	☐	☐	
Jib FORE Stays	☐		☐	☐	☐	☐	☐	☐	☐	☐	☐	☐	☐	☐	☐	☐	☐	☐	☐	☐	
Jip BACK Stays	☐		☐	☐	☐	☐	☐	☐	☐	☐	☐	☐	☐	☐	☐	☐	☐	☐	☐	☐	
Tag Line	☐		☐	☐	☐	☐	☐	☐	☐	☐	☐	☐	☐	☐	☐	☐	☐	☐	☐	☐	

LOAD BLOCKS:

Main: _____ **Capacity:** _____ **Weight:** _____

Manufacturer: _____ **Model:** _____ **S/N:** _____

Aux: _____ **Capacity:** _____ **Weight:** _____

Manufacturer: _____ **Model:** _____ **S/N:** _____

Other: _____ **Capacity:** _____ **Weight:** _____

Manufacturer: _____ **Model:** _____ **S/N:** _____

Hook Throat Measurements: Main _____ **Aux** _____ **Other** _____

Hook NDT: Main _____ **Aux** _____ **Other** _____

BOOM: **Boom Length: Min** _____ **ft. Max** _____ **ft.**

JIB: **Jib Length:** _____ **ft. Type** _____ **Jib Stops** _____

Posted weight of unit, if placed on vessel _____

EQUIPMENT - Visual & Operational Checks

A. GENERAL APPEARANCE	N/A	SAT	UNSAT	Remarks:
Paint	☐	☒	☐	
Tires	☐	☒	☐	
Sheet Metal	☐	☒	☐	
Glass	☐	☒	☐	
Housekeeping	☐	☒	☐	
Guards in Place	☐	☒	☐	

Other _____

B. CAB				Remarks:
Fire Extinguisher	☐	☒	☐	
Load Rating Chart	☐	☒	☐	
Controls Identified	☐	☒	☐	
Level Indicator	☐	☒	☐	
Load Indicator	☐	☒	☐	
Caution & Warning Signs	☐	☒	☐	
Operating Instruct.	☐	☒	☐	
Hand Signal Chart	☐	☒	☐	
Gauges	☐	☒	☐	
Required Controls	☐	☒	☐	

Other _____

C. LOAD BLOCKS				Remarks:
Sheaves	☐	☒	☐	
Cheek Plates	☐	☒	☐	
Pins	☐	☒	☐	
Swivel	☐	☒	☐	
Hook	☐	☒	☐	
Hoist rope retainer	☐	☒	☐	
Sheave Bearings	☐	☒	☐	
Anchoring of rope	☐	☒	☐	
Hook safety latches	☐	☒	☐	
Rope Reeving	☐	☒	☐	

Other _____

D. BOOM	N/A	SAT	UNSAT	Remarks:
Point sheaves	☐	☒	☐	
Anchoring of rope	☐	☒	☐	
Sheave Bearings	☐	☒	☐	
Rope Retainers	☐	☒	☐	
Tip Section	☐	☒	☐	
Intermediate Sec.	☐	☒	☐	
Base Section	☐	☒	☐	
Anti-Two Blocking Systems	☐	☒	☐	
Roller/Wear Pads	☐	☒	☐	
Boom Extension Hose & Reel	☐	☐	☐	
Hinge Pin	☐	☒	☐	
Hoist Cylinders	☐	☒	☐	
Hyd. Hose & Fittings	☐	☒	☐	
Angle/Radius Indic.	☐	☒	☐	
Boom Ext. Cyls.	☐	☒	☐	

Other _____

E. WINCH MOTOR				Remarks:
Wire Rope Cond.	☐	☒	☐	
Mounting Bolts	☐	☒	☐	
Rope Anchoring	☐	☒	☐	
Rope Spooling	☐	☒	☐	
Brakes	☐	☒	☐	
Drum Speed Indicator	☐	☒	☐	
Hyd. Hose & Fittings	☐	☒	☐	

Other _____

F. TURRET				Remarks:
Shear Ball	☐	☒	☐	
Structure	☐	☒	☐	
Mounting Balls	☐	☒	☐	
Swing Pinion Gear	☐	☒	☐	
Swing Bull Gear	☐	☒	☐	
Hyd. Hose & Fittings	☐	☒	☐	
Swing Brake	☐	☒	☐	
Positive Lock	* ☐	☒	☐	

Other _____

NO LOAD OPERATIONAL TEST - Remarks

All operations and Functions appear to be Correct and in order

RECOMMENDATION REPORT

The following recommendations should be corrected to improve the operating capabilities of the unit:

House lock pin could have control cable installed inside operator cab to facilitate easier use by operator.

DEFICIENCY REPORT

The following deficiencies **require** proper corrective action prior to the Anniversary Date to keep the unit in certification.

Keepers on outrigger Floats need to be repaired or Replaced. Because they won't stay on cylinders

Surveyor _____

Customer Representative _____

INSPECTION SERVICE LOG

INSPECTION INTERVAL: 10 HOUR CHECK LIST (DAILY) JUNE

DAY OF INSPECTION

REFERENCE	ITEMS TO BE INSPECTED AND INSPECTION MAINTENANCE CODE		INTERVAL	1	2	3	4	5	6	7	8	9	10	11	12	13	14	15	16	17	18	19	20	21	22	23	24	25	26	27	28	29	30	31
1	Operators Manual	1	D		✓			✓	✓	✓	✓	✓																						
2	Lights & Horn	2, 3, 19	D		✓			✓	✓	✓	✓	✓																						
3	Backup Alarm	7, 19	D		✓			✓	✓	✓	✓	✓																						
4	Gauges	3, 5, 7	D		✓			✓	✓	✓	✓	✓																						
5	Swing Brake	3, 7	D		✓			✓	✓	✓	✓	✓																						
6	Boom Angle Indicator	3, 7, 19	D		✓			✓	✓	✓	✓	✓																						
7	Load Moment Indicator	3, 7, 19	D																															
8	Antitwo-Block Elec. & Hyd.	3, 7, 19	D		✓			✓	✓	✓	✓	✓																						
9	Brakes and Air System	3, 5, 7, 13	D		✓			✓	✓	✓	✓	✓																						
10	Outrigger Float Pads	1, 16	D		✓			✓	✓	✓	✓	✓																						
11	Tire Condition and Pressure	4, 9, 10	D		✓			✓	✓	✓	✓	✓																						
12	Antifreeze and Coolant	4	D		✓			✓	✓	✓	✓	✓																						
13	Crankcase and Auto Transmission	4	D																															
14	Air Compressor Oil Level	4, 8	D																															
15	Hourmeter	3, 5, 19	D		✓			✓	✓	✓	✓	✓																						
16	Hyd. Reservoir	4	D		✓			✓	✓	✓	✓	✓																						
17	Hydraulic Oil Filter	6, 12	D																															
18	Wire Rope	20	D		✓			✓	✓	✓	✓	✓																						
19	Hoists	1, 6, 7, 9	D		✓			✓	✓	✓	✓	✓																						
20	Boom and Attachments	1, 6, 7, 9	D		✓			✓	✓	✓	✓	✓																						
21			D																															
22	Lubricate	*	D						✓																									
	INSPECTOR'S INITIALS				BT			BT	BT	BT	BT	BT																						

* LUBRICATE IN ACCORDANCE WITH MODELS SPECIFIED LUBRICATION REQUIREMENTS

INTERNATIONAL TECHNOLOGY CORPORATION

DATE 6-9-1995 4:25 pm (16:25)

DAY FRIDAY

ATTENTION Huff Equipment Co.

THIS IS TO CERTIFY THAT THE FOLLOWING EQUIPMENT HAS BEEN DECONTAMINATED AND IS PERMITTED TO LEAVE THE SITE FOR RETURN.

NAME OF EQUIPMENT:

PUG. MILL,

STACK CRADLE

MISC. PARTS AND PIECES

SUPERVISOR

Frank M. Vick Jr.
(signature)

HEALTH AND SAFETY

Frank M. Vick Jr.
(signature)

SITE MANAGER

Frank M. Vick Jr.
(signature)

NATIONS BANK REPRESENATIVE

Duane Barbuto
(signature)

THE ABOVE EQUIPMENT IS RETURNED CLEAN, AND IN THE SAME CONDITION AS WHEN RENTED EXCEPT AS NOTED BELOW.

EQUIPMENT COMPANY REPRESENTATIVE

(signature) (date)

ASH LANDFILL
SENECA ARMY DEPOT
ROMULUS, NY 14541

Regional Office
11499 Chester Road • Cincinnati, Ohio 45246-4012 • 513-782-4700 • FAX: 513-782-4807

IT Corporation is a wholly owned subsidiary of International Technology Corporation

INTERNATIONAL TECHNOLOGY CORPORATION

RECEIPT

NAME OF COMPONENT, EQUIPMENT OR PART: PUGMILL
STACK CRADLE
MISC PIECES

COMPANY REPRESENTED: NATIONSBANK

AUTHORIZED SIGNATURE: Duwain Bankston

DATE OF RELEASE: 6/9/95

Regional Office
11499 Chester Road • Cincinnati, Ohio 45246-4012 • 513-782-4700 • FAX: 513-782-4807

IT Corporation is a wholly owned subsidiary of International Technology Corporation

INTERNATIONAL TECHNOLOGY CORPORATION

DATE 6-9-1995 16:45 (4:45 pm.)

DAY FRIDAY

ATTENTION Huff Equipment Co.

THIS IS TO CERTIFY THAT THE FOLLOWING EQUIPMENT HAS BEEN DECONTAMINATED AND IS PERMITTED TO LEAVE THE SITE FOR RETURN.

NAME OF EQUIPMENT:

RADIAL STACKER

SUPERVISOR

Frank M. Vich Jr.
(signature)

HEALTH AND SAFETY

Frank M. Vich Jr.
(signature)

SITE MANAGER

Frank M. Vich Jr.
(signature)

NATIONS BANK REPRESENATIVE

Duane Bonfatti
(signature)

THE ABOVE EQUIPMENT IS RETURNED CLEAN, AND IN THE SAME CONDITION AS WHEN RENTED EXCEPT AS NOTED BELOW.

EQUIPMENT COMPANY REPRESENTATIVE

(signature) (date)

ASH LANDFILL
SENECA ARMY DEPOT
ROMULUS, NY 14541

Regional Office
11499 Chester Road • Cincinnati, Ohio 45246-4012 • 513-782-4700 • FAX: 513-782-4807

IT Corporation is a wholly owned subsidiary of International Technology Corporation

INTERNATIONAL TECHNOLOGY CORPORATION

RECEIPT

NAME OF COMPONENT, EQUIPMENT OR PART: RADIAL STACKER

COMPANY REPRESENTED: NATIONS BANK

AUTHORIZED SIGNATURE: Duncan Bambata

DATE OF RELEASE: 6/9/95

Regional Office
11499 Chester Road • Cincinnati, Ohio 45246-4012 • 513-782-4700 • FAX: 513-782-4807

IT Corporation is a wholly owned subsidiary of International Technology Corporation

INTERNATIONAL TECHNOLOGY CORPORATION

DATE 6-9-1995 11:30 am

DAY Friday

ATTENTION Huff Equip. Co

THIS IS TO CERTIFY THAT THE FOLLOWING EQUIPMENT HAS BEEN DECONTAMINATED AND IS PERMITTED TO LEAVE THE SITE FOR RETURN.

NAME OF EQUIPMENT:

Cross Over Duct

STACK

SUPERVISOR

Frank M. Vich Jr.
(signature)

HEALTH AND SAFETY

Frank M. Vich Jr.
(signature)

SITE MANAGER

Frank M. Vich Jr.
(signature)

NATIONS BANK REPRESENATIVE

Dwarn Bantolten

THE ABOVE EQUIPMENT IS RETURNED CLEAN, AND IN THE SAME CONDITION AS WHEN RENTED EXCEPT AS NOTED BELOW.

EQUIPMENT COMPANY REPRESENTATIVE

(signature) (date)

ASH LANDFILL
SENECA ARMY DEPOT
ROMULUS, NY 14541

Regional Office
11499 Chester Road • Cincinnati, Ohio 45246-4012 • 513-782-4700 • FAX: 513-782-4807

IT Corporation is a wholly owned subsidiary of International Technology Corporation

INTERNATIONAL TECHNOLOGY CORPORATION

RECEIPT

NAME OF COMPONENT, EQUIPMENT OR PART: CROSS OVER DUCT STACK

COMPANY REPRESENTED: NATIONSBANK

AUTHORIZED SIGNATURE: Duwain Barbuton

DATE OF RELEASE: 6/9/95

Regional Office
11499 Chester Road • Cincinnati, Ohio 45246-4012 • 513-782-4700 • FAX: 513-782-4807

IT Corporation is a wholly owned subsidiary of International Technology Corporation

INTERNATIONAL TECHNOLOGY CORPORATION

DATE 6-9-1995 10:30 am.

DAY Friday

ATTENTION Huff Equipment Co.

THIS IS TO CERTIFY THAT THE FOLLOWING EQUIPMENT HAS BEEN DECONTAMINATED AND IS PERMITTED TO LEAVE THE SITE FOR RETURN.

NAME OF EQUIPMENT:

2 AUGERS, RETURN DUCT FLIGHTS, MISC. PIECES

SUPERVISOR

Frank M. Vick Jr.
(signature)

HEALTH AND SAFETY

Frank M. Vick Jr.
(signature)

SITE MANAGER

Frank M. Vick Jr.
(signature)

Orwin Bankster
representing: Nations Bank

THE ABOVE EQUIPMENT IS RETURNED CLEAN, AND IN THE SAME CONDITION AS WHEN RENTED EXCEPT AS NOTED BELOW.

EQUIPMENT COMPANY REPRESENTATIVE

(signature) (date)

ASH LANDFILL
SENECA ARMY DEPOT
ROMULUS, NY 14541

Regional Office
11499 Chester Road • Cincinnati, Ohio 45246-4012 • 513-782-4700 • FAX: 513-782-4807

IT Corporation is a wholly owned subsidiary of International Technology Corporation

INTERNATIONAL TECHNOLOGY CORPORATION

RECEIPT

NAME OF COMPONENT, EQUIPMENT OR PART: 2 AUGERS
RETURN DUCT
FLIGHTS
MISC. PIECES

COMPANY REPRESENTED: NATIONS BANK

AUTHORIZED SIGNATURE: Dwain Bambaten

DATE OF RELEASE: 6/9/95

Regional Office
11499 Chester Road • Cincinnati, Ohio 45246-4012 • 513-782-4700 • FAX: 513-782-4807

IT Corporation is a wholly owned subsidiary of International Technology Corporation

INTERNATIONAL TECHNOLOGY CORPORATION

DATE 6-9-1995 10:45 am.

DAY Friday

ATTENTION Hazco Services

THIS IS TO CERTIFY THAT THE FOLLOWING EQUIPMENT HAS BEEN DECONTAMINATED AND IS PERMITTED TO LEAVE THE SITE FOR RETURN.

NAME OF EQUIPMENT:

Decon Trailer #6

SUPERVISOR

Frank M. Vohl Jr
(signature)

HEALTH AND SAFETY

Frank M. Vohl Jr
(signature)

SITE MANAGER

Frank M. Vohl Jr
(signature)

THE ABOVE EQUIPMENT IS RETURNED CLEAN, AND IN THE SAME CONDITION AS WHEN RENTED EXCEPT AS NOTED BELOW.

EQUIPMENT COMPANY REPRESENTATIVE

Frank Mayer - DRIVER
(signature)

6-9-95
(date)

ASH LANDFILL
SENECA ARMY DEPOT
ROMULUS, NY 14541

Regional Office
11499 Chester Road • Cincinnati, Ohio 45246-4012 • 513-782-4700 • FAX: 513-782-4807

IT Corporation is a wholly owned subsidiary of International Technology Corporation

INTERNATIONAL TECHNOLOGY CORPORATION

RECEIPT

NAME OF COMPONENT, EQUIPMENT OR PART: 1. Bag House and After Burner
2. Welder

COMPANY REPRESENTED: Nation's Bank

AUTHORIZED SIGNATURE: Brian Bankston

DATE OF RELEASE: 6-12-1995

Regional Office
11499 Chester Road • Cincinnati, Ohio 45246-4012 • 513-782-4700 • FAX: 513-782-4807

IT Corporation is a wholly owned subsidiary of International Technology Corporation

INTERNATIONAL TECHNOLOGY CORPORATION

RECEIPT 11:30 am

NAME OF COMPONENT, EQUIPMENT OR PART: Control Room Feeder MANUALS

COMPANY REPRESENTED: Nation's Bank

AUTHORIZED SIGNATURE: Dusin Barbaton

DATE OF RELEASE: 6-13-1995

Regional Office
11499 Chester Road • Cincinnati, Ohio 45246-4012 • 513-782-4700 • FAX: 513-782-4807

IT Corporation is a wholly owned subsidiary of International Technology Corporation

INTERNATIONAL TECHNOLOGY CORPORATION

DATE 6-13-1995

DAY Tuesday

ATTENTION Huff Equipment Co.

THIS IS TO CERTIFY THAT THE FOLLOWING EQUIPMENT HAS BEEN DECONTAMINATED AND IS PERMITTED TO LEAVE THE SITE FOR RETURN.

NAME OF EQUIPMENT:

Control Room

Feeder

manuals

SUPERVISOR

Frank M. Vish Jr.
(signature)

HEALTH AND SAFETY

Frank M. Vish Jr.
(signature)

SITE MANAGER

Frank M. Vish Jr.
(signature)

NATION'S BANK REPRESENATIVE

Duwan Bankston
(Signature)

THE ABOVE EQUIPMENT IS RETURNED CLEAN, AND IN THE SAME CONDITION AS WHEN RENTED EXCEPT AS NOTED BELOW.

EQUIPMENT COMPANY REPRESENTATIVE

(signature) (date)

ASH LANDFILL
SENECA ARMY DEPOT
ROMULUS, NY 14541

Regional Office
11499 Chester Road • Cincinnati, Ohio 45246-4012 • 513-782-4700 • FAX: 513-782-4807

IT Corporation is a wholly owned subsidiary of International Technology Corporation

INTERNATIONAL TECHNOLOGY CORPORATION

RECEIPT 15:00 (3:00pm)

NAME OF COMPONENT, EQUIPMENT OR PART: Crusher
Drier (Kiln)

COMPANY REPRESENTED: Nation's Bank

AUTHORIZED SIGNATURE: Juan Bambaten

DATE OF RELEASE: 6-13-1995

Regional Office
11499 Chester Road • Cincinnati, Ohio 45246-4012 • 513-782-4700 • FAX: 513-782-4807

IT Corporation is a wholly owned subsidiary of International Technology Corporation

INTERNATIONAL TECHNOLOGY CORPORATION

DATE 6-13-1995

DAY Tuesday

ATTENTION Huff Equipment Co.

THIS IS TO CERTIFY THAT THE FOLLOWING EQUIPMENT HAS BEEN DECONTAMINATED AND IS PERMITTED TO LEAVE THE SITE FOR RETURN.

NAME OF EQUIPMENT:

Crusher

Drier (Kiln)

SUPERVISOR

Frank M. Vick Jr.
(signature)

HEALTH AND SAFETY

Frank M. Vick Jr.
(signature)

SITE MANAGER

Frank M. Vick Jr.
(signature)

NATIONS BANK REPRESENATIVE

Duane Bambster
(signature)

THE ABOVE EQUIPMENT IS RETURNED CLEAN, AND IN THE SAME CONDITION AS WHEN RENTED EXCEPT AS NOTED BELOW.

EQUIPMENT COMPANY REPRESENTATIVE

(signature) (date)

ASH LANDFILL
SENECA ARMY DEPOT
ROMULUS, NY 14541

Regional Office
11499 Chester Road • Cincinnati, Ohio 45246-4012 • 513-782-4700 • FAX: 513-782-4807

IT Corporation is a wholly owned subsidiary of International Technology Corporation

IT CORPORATION

PROJECT

EQUIPMENT INSPECTION LOG

Equipment Type: 966 Loader

Equipment Supplier: S.S

Unit #: CaT

Date: 6-17-95

BRAKES	Good	COOLING WATER	Good
AIR SYSTEM	Good	OPERATING CONTROLS	Good
TIRES/TRACKS	Fair	LIGHTS/REFLECTORS	Good
HORN	Good	WINDSHIELD WIPERS	Good
SAFETY DEVICES	Good	FIRE EXTINGUISHER	N/A
GLASS	Good	BACKUP ALARM	Good
MIRRORS	Good	ENGINE OIL	Good - Add/Check
DEFROSTER	Good	EXHAUST SYSTEM	Good
STEERING SYSTEM	Good	FLUID LEVELS	Good
WIRE ROPE	N/A	MAINTAINENCE MANUALS	Good
APPEARANCE	Good	OPERATING MANUALS	Good
ELECTRICAL SYSTEM	Good	LOAD CHARTS	Good
INSPECTOR:	Brian Collins	DATE:	6-17-95
APPROVED: (HEALTH & SAFETY)	Frank M. Vick Jr.	DATE:	6-17-1995
PHOTOGRAPHS TAKEN			

IT CORPORATION

PROJECT

EQUIPMENT INSPECTION LOG

Equipment Type: D.5 dozer

Equipment Supplier: S.S.

I.D. #:

Date:

BRAKES	✓	COOLING WATER	✓
AIR SYSTEM	needs Filter's	OPERATING CONTROLS	✓
TIRES/TRACKS	✓	LIGHTS/REFLECTORS	✓
HORN	✓	WINDSHIELD WIPERS	✓
SAFETY DEVICES	✓	FIRE EXTINGUISHER	✓
GLASS	✓	BACKUP ALARM	✓
MIRRORS	✓	ENGINE OIL	Add/Check ✓
DEFROSTER	✓	EXHAUST SYSTEM	✓
STEERING SYSTEM	✓	FLUID LEVELS	✓
WIRE ROPE	N.A.	MAINTAINENCE MANUALS	✓
APPEARANCE	good	OPERATING MANUALS	✓
ELECTRICAL SYSTEM	✓	LOAD CHARTS	N.A.
INSPECTOR	[illegible]	DATE:	6-17-95
APPROVED (HEALTH & SAFETY)	Frank M. Vick Jr	DATE:	6-17-1995

PHOTOGRAPHS TAKEN

IT CORPORATION

PROJECT

EQUIPMENT INSPECTION LOG

Equipment Type: Track hoe

Equipment Supplier: Harry Farr

I.D. #: Kobelco

Date: 6-17-95

BRAKES	Good	COOLING WATER	Good
AIR SYSTEM	Good	OPERATING CONTROLS	Good
TIRES/TRACKS	Good	LIGHTS/REFLECTORS	Fair
HORN	Good	WINDSHIELD WIPERS	Fair
SAFETY DEVICES	Good	FIRE EXTINGUISHER	NA
GLASS	Fair	BACKUP ALARM	None
MIRRORS	NA	ENGINE OIL	Good Add/Check
DEFROSTER	Good	EXHAUST SYSTEM	Good
STEERING SYSTEM	Good	FLUID LEVELS	Good
WIRE ROPE	NA	MAINTAINENCE MANUALS	None
APPEARANCE	Fair	OPERATING MANUALS	None
ELECTRICAL SYSTEM	Good	LOAD CHARTS	None
INSPECTOR:	[illegible]	DATE:	6-17-95
APPROVED: (HEALTH & SAFETY)	Frank M. Vick Jr.	DATE:	6-17-1995
PHOTOGRAPHS TAKEN			

IT CORPORATION

PROJECT

EQUIPMENT INSPECTION LOG

Equipment Type: [illegible]

Equipment Supplier: [illegible]

ID #:

Date: 6-16-1995

BRAKES	✓	COOLING WATER	✓
AIR SYSTEM	✓	OPERATING CONTROLS	✓
TIRES/TRACKS	✓	LIGHTS/REFLECTORS	✓
HORN	✓	WINDSHIELD WIPERS	✓
SAFETY DEVICES	✓	FIRE EXTINGUISHER	✓
GLASS	✓	BACKUP ALARM	✓
MIRRORS	✓	ENGINE OIL - Add/Check	✓
DEFROSTER	✓	EXHAUST SYSTEM	✓
STEERING SYSTEM	✓	FLUID LEVELS	✓
WIRE ROPE	NA	MAINTAINENCE MANUALS	✓
APPEARANCE	good	OPERATING MANUALS	✓
ELECTRICAL SYSTEM	✓	LOAD CHARTS	NA
INSPECTOR	[illegible]	DATE:	6-16-95
APPROVED (HEALTH & SAFETY)	Frank M. [illegible] Jr	DATE:	6-16-1995
PHOTOGRAPHS TAKEN			

IT CORPORATION

PROJECT

EQUIPMENT INSPECTION LOG

Equipment Type: Track Loe

Equipment Supplier: Harry Fan

I.D. #: Kopeloo

Date: 6-15-95

BRAKES	Good	COOLING WATER	Good
AIR SYSTEM	Good	OPERATING CONTROLS	Fair
TIRES/TRACKS	Good	LIGHTS/REFLECTORS	Fair
HORN	Good	WINDSHIELD WIPERS	Fair
SAFETY DEVICES	NA	FIRE EXTINGUISHER	NA
GLASS	Good	BACKUP ALARM	None
MIRRORS	N/A	ENGINE OIL	Good Add/Check
DEFROSTER	Good	EXHAUST SYSTEM	Good
STEERING SYSTEM	Good	FLUID LEVELS	Good
WIRE ROPE	NA	MAINTAINENCE MANUALS	NA
APPEARANCE	Fair	OPERATING MANUALS	NA
ELECTRICAL SYSTEM	Good	LOAD CHARTS	None
INSPECTOR	Brian Callis	DATE:	6-15-95
APPROVED	Frank M. Vich Jr. (HEALTH & SAFETY)	DATE:	6-15-1995
PHOTOGRAPHS TAKEN			

IT CORPORATION

PROJECT

EQUIPMENT INSPECTION LOG

Equipment Type: loader

Equipment Supplier: SS

I.D. #: 966F

Date: 6-15-95

BRAKES	✓	COOLING WATER	✓
AIR SYSTEM	✓	OPERATING CONTROLS	✓
TIRES/TRACKS	✓	LIGHTS/REFLECTORS	✓
HORN	✓	WINDSHIELD WIPERS	✓
SAFETY DEVICES	✓	FIRE EXTINGUISHER	✓
GLASS	✓	BACKUP ALARM	✓
MIRRORS	✓	ENGINE OIL	Add/Check ✓
DEFROSTER	✓	EXHAUST SYSTEM	✓
STEERING SYSTEM	✓	FLUID LEVELS	✓
WIRE ROPE	✓	MAINTAINENCE MANUALS	
APPEARANCE	✓	OPERATING MANUALS	
ELECTRICAL SYSTEM	✓	LOAD CHARTS	
INSPECTOR	[signature]	DATE:	6-15-95
APPROVED (HEALTH & SAFETY)	[signature]	DATE:	6-15-1995
PHOTOGRAPHS TAKEN			

IT CORPORATION

PROJECT

EQUIPMENT INSPECTION LOG

Equipment Type: Loader

Equipment Supplier: Cat

I.D. #: IT 18F

Date: 6-15-95

BRAKES ✓		COOLING WATER	
AIR SYSTEM ✓		OPERATING CONTROLS ✓	
TIRES/TRACKS ✓		LIGHTS/REFLECTORS	Brake Lights On, won't shut off
HORN ✓		WINDSHIELD WIPERS ✓	
SAFETY DEVICES ✓		FIRE EXTINGUISHER ✓	
GLASS ✓		BACKUP ALARM ✓	
MIRRORS ✓		ENGINE OIL Good	Add/Check
DEFROSTER ✓		EXHAUST SYSTEM ✓	
STEERING SYSTEM ✓		FLUID LEVELS Good	
WIRE ROPE ✓		MAINTAINENCE MANUALS ✓	
APPEARANCE ✓		OPERATING MANUALS ✓	
ELECTRICAL SYSTEM	Brake Light?	LOAD CHARTS	
INSPECTOR	Steve Rocci	DATE:	6-15-95
APPROVED:	Frank M. Vel Jr. (HEALTH & SAFETY)	DATE:	6-15-1995
PHOTOGRAPHS TAKEN			

IT CORPORATION

PROJECT

EQUIPMENT INSPECTION LOG

Equipment Type: D E dozer

Equipment Supplier: S.S.

ID #:

Date:

Fuel Cap & Hydraulic oil cap missing

BRAKES	✓	COOLING WATER	✓
AIR SYSTEM	✓	OPERATING CONTROLS	✓
TIRES/TRACKS	✓	LIGHTS/REFLECTORS	✓
HORN	✓	WINDSHIELD WIPERS	✓
SAFETY DEVICES	✓	FIRE EXTINGUISHER	✓
GLASS	✓	BACKUP ALARM	✓
MIRRORS	✓	ENGINE OIL ✓ Add/Check	
DEFROSTER	✓	EXHAUST SYSTEM	✓
STEERING SYSTEM	✓	FLUID LEVELS	✓
WIRE ROPE	NA	MAINTAINENCE MANUALS	✓
APPEARANCE	good	OPERATING MANUALS	✓
ELECTRICAL SYSTEM	✓	LOAD CHARTS	NA
INSPECTOR:	[illegible]	DATE:	6-15-95
APPROVED:	Frank M. [illegible] Jr (HEALTH & SAFETY)	DATE:	6-15-1995
PHOTOGRAPHS TAKEN			

IT CORPORATION

PROJECT

EQUIPMENT INSPECTION LOG

Equipment Type: D5 dozer

Equipment Supplier: CS

I.D. #:

Date:

BRAKES	✓	COOLING WATER	✓
AIR SYSTEM	✓	OPERATING CONTROLS	✓
TIRES/TRACKS	✓	LIGHTS/REFLECTORS	✓
HORN	✓	WINDSHIELD WIPERS	✓
SAFETY DEVICES	✓	FIRE EXTINGUISHER	✓
GLASS	✓	BACKUP ALARM	✓
MIRRORS	✓	ENGINE OIL Add/Check	✓
DEFROSTER	✓	EXHAUST SYSTEM	✓
STEERING SYSTEM	✓	FLUID LEVELS	✓
WIRE ROPE	NA	MAINTAINENCE MANUALS	✓
APPEARANCE	good	OPERATING MANUALS	✓
ELECTRICAL SYSTEM	✓	LOAD CHARTS	NA
INSPECTOR	[signature]	DATE:	6-19-95
APPROVED	Frank M. Vick Jr. (HEALTH & SAFETY)	DATE:	6-19-1995
PHOTOGRAPHS TAKEN			

IT CORPORATION

PROJECT

EQUIPMENT INSPECTION LOG

Equipment Type: Loader

Equipment Supplier: SS

I.D. #: 966F series II

Date: 6-19-95

BRAKES	✓	COOLING WATER	✓
AIR SYSTEM	✓	OPERATING CONTROLS	✓
TIRES/TRACKS	✓	LIGHTS/REFLECTORS	✓
HORN	✓	WINDSHIELD WIPERS	✓
SAFETY DEVICES	✓	FIRE EXTINGUISHER	✓
GLASS	✓	BACKUP ALARM	✓
MIRRORS	✓	ENGINE OIL	Add/Check ✓
DEFROSTER	✓	EXHAUST SYSTEM	✓
STEERING SYSTEM	✓	FLUID LEVELS	✓
WIRE ROPE	✓	MAINTAINENCE MANUALS	✓
APPEARANCE	✓	OPERATING MANUALS	
ELECTRICAL SYSTEM	✓	LOAD CHARTS	

INSPECTOR: Michael L. Strickler DATE: 6-19-95

APPROVED: Frank M. Vick Jr. DATE: 6-19-1995

(HEALTH & SAFETY)

PHOTOGRAPHS TAKEN

IT CORPORATION

PROJECT

EQUIPMENT INSPECTION LOG

Equipment Type: Loader

Equipment Supplier: SS

I.D. #: IT 18 F

Date: 6-19-95

BRAKES	✓	COOLING WATER	✓
AIR SYSTEM	✓	OPERATING CONTROLS	✓
TIRES/TRACKS	✓	LIGHTS/REFLECTORS	*
HORN	✓	WINDSHIELD WIPERS	✓
SAFETY DEVICES	✓	FIRE EXTINGUISHER	✓
GLASS	✓	BACKUP ALARM	✓
MIRRORS	✓	ENGINE OIL	Add/Check ✓
DEFROSTER	✓	EXHAUST SYSTEM	✓
STEERING SYSTEM	✓	FLUID LEVELS	✓
WIRE ROPE	✓	MAINTAINENCE MANUALS	
APPEARANCE	✓	OPERATING MANUALS	
ELECTRICAL SYSTEM	✓	LOAD CHARTS	
INSPECTOR	Michael L. Stuckle	DATE:	6-19-95
APPROVED	Frank N. Vick Jr. (HEALTH & SAFETY)	DATE:	6-19-1995

* Tail lights will not shut off. We have [redacted] to shut master switch off to shut the lights off.

PHOTOGRAPHS TAKEN

IT CORPORATION

PROJECT

EQUIPMENT INSPECTION LOG

Equipment Type: Track hoe

Equipment Supplier: Harry Farr

I.D. #: Koebelco

Date: 6-19-95

BRAKES	✓	COOLING WATER	✓
AIR SYSTEM	✓	OPERATING CONTROLS	✓
TIRES/TRACKS	✓	LIGHTS/REFLECTORS	✓
HORN	✓	WINDSHIELD WIPERS	✓
SAFETY DEVICES	✓	FIRE EXTINGUISHER	✓
GLASS	✓	BACKUP ALARM	✓
MIRRORS	✓	ENGINE OIL	Add/Check ✓
DEFROSTER	✓	EXHAUST SYSTEM	✓
STEERING SYSTEM	✓	FLUID LEVELS	✓
WIRE ROPE	✓	MAINTAINENCE MANUALS	
APPEARANCE	✓	OPERATING MANUALS	
ELECTRICAL SYSTEM	✓	LOAD CHARTS	
INSPECTOR	Michael L. Truckle	DATE:	6-19-95
APPROVED	Frank M Vick Jr (HEALTH & SAFETY)	DATE:	6-19-1995
PHOTOGRAPHS TAKEN			

Appendix N

Project Correspondence

INTERNATIONAL TECHNOLOGY CORPORATION

Environmental Services

TELECOPIER TRANSMISSION

TO: Doug Weiner, IT-Cincinnati

Date: July 28, 1994

Office: Cincinnati
FAX: (513) 782- 4807

Number Pages: 3
+ Attachment

FROM: Jeffrey Korb, IT- Rochester

IT Corporation
140 Allens Creek Road
Suite 150
Rochester, NY 14618

TEL: 716-271-6430
FAX: 716-271-0251

RE: **Preliminary Air Emissions Analysis for Seneca Army Depot (SEDA) project- IT Project No. 519070**

Copy To: Steve DeCicchio, IT-Knoxville

Faxed to D. Weiner 7/28/94 @ 6:30pm

Remarks: As we discussed earlier today, I am submitting a summary description and the raw data from the preliminary air emissions analysis for the SEDA project. The analysis was performed to assess potential emission sources and their impacts on air quality as related to the performance of this project. The emissions analysis included examination of the following general sources:

- Fugitive, area sources such as excavations and soil staging areas;
- Point sources such as the LTTD system and possible water treatment system.

The primary chemicals investigated those identified as of concern for the project- both VOCs and PAHs, as well as particulate material. A preliminary screening protocol required to be completed prior to operation of an air emission sources in the State of New York (see Air Guide-1) was used to evaluate the emissions for this site. Several different scenarios of operations and activities were calculated in the protocol, in order to examine worst case conditions to site conditions of a lesser degree of concern. Emission rates for the chemicals were estimated based on various operating assumptions to lengthy to discuss here. Specific compound emission rates are used to calculate very conservative emission impact numbers (C_s, C_p, and C_a) and then are compared to threshold values (AGCs, SGCs) to determine acceptable operating scenarios. Compounds that pass this comparison can be emitted without difficulty. Chemicals that do not may require pollution control at the source.

A wide range of site conditions and site operating parameters were examined during this analysis. Different operating rates for the LTTD system and air stripper, different

stack heights, with and without control devices, and for fugitives, different sizes of excavations, all were tried to help determine what IT will require for the control of air emissions for the project. As you may suspect, this analysis is preliminary, is based on a wide variety of assumptions that may not accurately represent actual site conditions or how things eventually will operate on the site, will tend to be very conservative estimates of emissions and thus will over-estimate design and system requirements for the HTTD system and air stripper. Also, chemical volatilization was assumed to be 100%, PAHs to be 90% destroyed in the HTTD, and most calculations are based on the maximum chemical concentrations available for release. Ultimately, this type of over-compensation will give IT a large cushion to deal with hot spots or other unforeseen circumstances when on-site. A more refined analysis can be completed with relative ease if we want to more closely examine emissions and their impacts for the project- in fact they may be necessary to appropriately balance project needs with project air emission limitations.

Also included in this package are several runs of the SCREEN2 model which estimates short-term impacts for point sources over a range of distances from the source. These model analyses are quick and easy to run so we used them here to perform a more refined analysis of the few chemicals repeatedly failing the screening protocol- **TCE, vinyl chloride, and B(a)P**.

In summary, a review of the screening and modeling data suggests the following:

- Water treatment/Air stripper- the air stripper should be easy to operate well on this project and without additional control equipment; however, this includes these limitations to operation: the stripper height must greater than 20 feet and must operate at greater than 50 gpm at any time. As can be seen, outside of these parameters an additional control device such as an afterburner may be required, mostly because of the localized impact of TCE released from the stripper. Addition of an afterburner would definitely limit emissions from the stripper (>99%).

- HTTD System and associated off-gas release- the HTTD will release primarily volatilized VOCs and trace PAH levels, as well as possible particulate material. Acceptable operating parameters for the HTTD air emissions include: a stack height greater than 30 feet to disperse the VOCs and installation of an appropriate pollution control device to control the VOCs. Of particular concern here is the potential to emit not only VOCs and PAHs, but also particulate compounds that may contain trace amounts of lead or other metals previously identified as being present on-site.

- Fugitive emissions from excavations/staging operations- these emissions from area and volume sources are of concern because they will directly influence operations at the site; as you can see in the results, **TCE, VC, and B(a)P** are once again the greatest concern. The results suggest that an excavation around 500 square feet may be possible at any one time. Once again, this is a conservative estimate based on high, worst case soil concentrations and in all probability should be examined more closely.

Other options to control levels of emissions includes strictly coordinating on-site field activities and other administrative and engineering approaches as well as better defining site operating hours.

- In combination, if all air emissions at the site were uncontrolled, the data suggests that we would exceed acceptable limits at the site perimeter and beyond. With recommended controls and pollution control devices present and in operation, emissions impacts will be reduced significantly and the threat of a non-compliance situation will be minimal. Without emission control of some kind, there is no doubt that the site perimeter monitoring action levels will be exceeded.

I would suggest that the addition of the appropriate pollution control device on the HTTD system is a key to successful emissions control; the control device should be capable of around 99% removal efficiency for VOCs (particulate control needed as well?). The reasons for this recommendation is simple: the off-gas emissions from the HTTD are required to be monitored during startup/prove-out and operation and the State will most likely be the most interested in the emissions from the system, especially with the lead/metals emission possibility.

While the estimates of the emissions for the project are now developed, there can be further refinement for the analysis if needed, including both in the estimating protocols and in specifics about the activities and operations at the site. FYI: the better we can define/estimate the operating parameters the better numbers we'll get for operations.

Call if you have any questions.

-- Jeff

FERtech
ENVIRONMENTAL, INC.

Via Facsimile - 716 271 0251
Original Via Mail

7 September 1994

Mr. David Buzzelli
International Technology Corporation
140 Allens Creek Road
Rochester, New York 14618

Re: LTTD System Specifications For Air Permit Application to NYSDEC, Seneca Army Depot, Soil Remediation Project, New York

Dear Mr. Buzzelli:

In respond to your facsimile request yesterday, I have summarized a list of FERtech's proposed LTTD system specifications and dimensions in support of NYSDEC air permit application preparation for the soil remediation project at the Seneca Army Depot, New York.

Stack Height:	56 ft.
Stack ID:	3.3 ft.
Soil Retention Time:	8-12 Min
Control Devices	Thermal Oxidizer for VOCs; Baghouse for PM

It is likely that NYSDEC requires thermal oxidizer operations temperature at 1,400°F during the soil remediation project at the Seneca Army Depot. The air permit issued to FERtech by NYSDEC required thermal oxidizer temperature at 1,400°F while meeting the required emission control efficiency. The following parameters on exhaust gases from the LTTD system are based on two operating scenarios:

(i) Thermal Oxidizer at 1,800°F:

Exhaust Gas/Stack Temp:	1,730 - 1,780°F
Exhaust Gas Flow Rate:	46,000 - 49,000 acfm
Exhaust Gas Velocity:	105 - 115 ft./sec

(ii) Thermal Oxidizer at 1,400°F:

Exhaust Gas/Stack Temp:	1,330 - 1,380 °F
Exhaust Gas Flow Rate:	34,000 - 37,000 acfm
Exhaust Gas Velocity:	80 - 90 ft/sec

P.O. Box 918 1301 Morley, Suite 107 Moberly, Missouri 65270 816/263-1000 800/362-8808 FAX 816/263-9304

Letter to Mr. Buzzelli
7 September 1994
Page Two

Here at FERtech we have obtained and negotiated similar air permits (also known and refereed to as authority to construct) from over twenty regulatory agencies nationwide including southern California. I am very anxious to work with you (or your staff) in all stages of this permit application preparation prior to submittal to NYSDEC for review and permit issuance. I strongly believe that FERtech's experience in this field is unmatched and could assist both IT Corp and FERtech in expediting the permitting process; therefore, resulting in faster site mobilization and project completion.

Please feel free to contact me should you have any questions or if you require any clarification regarding this matter. Thank you.

Sincerely,

Shadi Nikfarjam, Vice President
Environmental Compliance

xc: Dennis Moore, FERtech
Gary Grosswitt, FERtech
Martin Friedman, IT Corp
File
(absence)

FERtech
ENVIRONMENTAL, INC.

4 October 1994

Mr. Jeff Korb
IT Corporation
140 Allens Creek Road, Suite 150
Rochester, New York 14618

Re: Low Temperature Thermal Desorption Soil Remediation Project, Seneca Army Depot, New York

Dear Jeff:

Pursuant to our earlier telephone conversation yesterday, attached please find the information you requested on the proposed LTTD unit. Also included is a copy of the unit's past source monitoring test results during substantially similar soil remediation project in southern California. The engineering drawings provided herein identifies the sampling ports on the stack and the location of treated soil discharge as you requested for preparation of your prove-out plan. Please note that during the stack testing event you will need an elevated platform that can easily reach the sampling ports at approximately 50-60 feet from the ground.

Please feel free to contact me or Mr. Dennis Elmore, Regulatory Compliance Specialist, should you require any clarification regarding this matter. Thank you.

Best Regards,
FERtech Environmental, Inc.

Shadi Nikfarjam, Vice President
Environmental compliance

Attachment

xc: Dennis Elmore, FERtech
Gary Greenwalt, FERtech
File TH
(a:\lt1)

P.O. Box 918 630 N. Morley, Suite 107 Moberly, Missouri 65270 816/263-1000 800/362-8808 FAX 816/263-9304

West Coast Environmental

SOURCE TEST REPORT

for:

Fertech Corporation
P.O. Box 918
Moberly, MO 65270

Fertech, So. Cal. Gas Site
Thermal Remediation Unit

San Joaquin Valley APCD
Authority to Construct
S-2330-1-0

TESTING CONDUCTED

May 17, 1994

Prepared by:

WEST COAST ENVIRONMENTAL, INC.
4245 Market Street; Suite 206
Ventura, California 93003

June 10, 1994

FE100-180

1.0 INTRODUCTION

This is a source test report for the testing conducted by West Coast Environmental on May 17, 1994 on a Thermal Remediation Unit. The unit is located at the Southern California Gas Company site in Dinuba, which is in Tulare County, California. Operation of the remediation unit is authorized by the San Joaquin Valley APCD Authority to Construct (ATC) # S-2330-1-0.

The purpose of this source test program is to demonstrate that the remediation unit's operation is in compliance with the ATC requirements per California Air Resources Board (CARB) Method 100, Environmental Protection Agency (EPA) Method TO-14, and CARB Methods 1-4. The unit was tested at 100% load, in an as found condition.

a. Test Date : May 17, 1994

b. Source Test Contractor :

West Coast Environmental, Inc.
4245 Market Street; Suite 206
Ventura, California 93003
(805) 644-7976 Attn: E.J. Steele/B.E. Yates

West Coast Environmental is CARB certified for the methods performed.

c. Authority to Construct Holder - Shadi Nikjamfar - Env. Compliance Dir.
Fertech Corporation
P.O. Box 918
Moberly, MO 65270

Analytical Laboratory - Dr. Sucha Parmar - President
Atmospheric Analysis & Consulting
4572 Telephone Road, Suite 920
Ventura, CA 93003

d. Site Description - The remediation unit is located on the south end of the So. California Gas Co. site located in Dinuba, California. Please refer to Figure #1.

e. Constituents, Pollutants Tested -

Parameter	Method	Comments
Oxides of Nitrogen	CARB 100	chemiluminescence
Carbon Monoxide	CARB 100	gas filter correlation
Stack Gas Oxygen	CARB 100	Paramagnetic
Carbon Dioxide	CARB 100	N-DIR
Volatile Organic Compounds	TO-14	Integrated Tedlar bag
Exhaust Flow	EPA Method 1-4	Gravimetric

f. Project Engineers - E.J. Steele/B.E. Yates, West Coast Environmental, Inc.

g. SJVAPCD Observer - Glenn Slitor, Air Quality Specialist

h. Authority to Construct Representative - Shadi Nikfarjam, Fertech-Env. Comp. Director

i. SJVAPCD Authority to Construct Number -

Authority to Construct: #S-2330-1-0

j. Reason for Test - To demonstrate that the subject remediation unit operates and performs within the conditions set forth by the San Joaquin Valley APCD Authority to Construct # S-2330-1-0.

k. Deviations from the Test Plan - The source test was initially attempted on May 16,1994. After completion of the first run, problems were encountered regarding the operating ability of the remediation unit. Due to these problems, the remaining two runs were unable to be performed and the test day was invalidated, per Glenn Slitor the SJVAPCD observer onsite. The results of the initial attempt can be found in the Addendum at the end of this report. Testing was rescheduled to take place on May 17, 1994.

The second deviation concerned monitoring NO_x, O_2, CO_2 & CO from both the inlet & outlet gas streams. This was not required by the Authority to Construct, and was not performed. This change in testing was approved by SJVAPCD observer, Glenn Slitor.

2.0 RESULTS AND SUMMARY

a. Test Run Results, Averages

Parameter (Test time)	1 8:23am-9:23am	2 12:35pm-1:35pm	3 1:56pm-2:56pm	Averages
Oxides of Nitrogen				
ppmv	124	125	106	118
lbs/hr	8.37	8.42	7.12	7.97
lbs/MMBTU	0.23	0.21	0.18	0.21
Oxygen				
percent	3.4	3.4	3.9	3.6
Carbon Monoxide				
ppmv	<1	<1	<1	<1
lbs/hr	<0.01	<0.01	<0.01	<0.01
lbs/MMBTU	<0.01	<0.01	<0.01	<0.01
Carbon Dioxide				
percent	9.3	10.7	10.1	10.0
Volitile Organic Compounds				
ppbv, inlet	104,294	192,269	8,325	101,629
ppbv, outlet	38.7	41.7	100.7	60.3
lbs/hr	0.0064	0.0069	0.0169	0.0100
lbs/tons soil produce	0.0004	0.0004	0.0009	0.0005
DRE %	-	-	-	99.94
Natural Gas Consumtion				
CFH	36,000	38,000	41,000	38,333
Exhaust Flow Rate (Q)*				
DSCFM	9,266	9,248	9,216	9,243
Stack Gas Temperature				
Degrees Fahrenheit	1,739	1,780	1,730	1,750
Soil exit Temperature				
Degrees Fahrenheit	874	893	855	874

Note: * Stack gas flow rate was using EPA Methods 1-4 (Refer to attachments).

West Coast Environmental
Test Date: May 17, 1994
VOC Summary
(Inlet and Outlet values are listed in parts per billion)

FertechCorporation
So. Cal. Gas - Dinuba Site

Consituent	Run #1		Run #2		Run #3		Averages			
	Inlet	Outlet	Inlet	Outlet	Inlet	Outlet	Inlet	Outlet	MW	MW x ppbv
Chloroethane	470	1	1000	1	1	1	490	1.00	64.52	64.52
Trichlorofluoroethane	2	0.5	2	0.5	0.5	0.5	2	0.50	187.38	93.69
1,1 Dichloroethene	300	0.5	150	0.5	2	0.5	151	0.50	96.96	48.48
Trichlorotrifluoroethane	12	0.5	45	0.5	2	0.5	20	0.50	187.37	93.69
1,1 Dichloroethane	12	2.5	34	2.5	2.5	2.5	16	2.50	98.96	247.40
cis-1,2 Dichloroethylene	12	2.5	2.5	2.5	2.5	2.5	6	2.50	96.94	242.35
Chloroform	4	0.5	3	0.5	0.5	0.5	3	0.50	119.38	59.69
1,2 Dichloroethane	300	2.5	190	2.5	2.5	2.5	164	2.50	98.96	247.40
Benzene	57000	2.5	110000	2.5	5700	2.5	57,567	2.50	78.12	195.30
Carbon Tetrachloride	2	0.1	1	0.1	0.1	0.1	1	0.10	153.82	15.38
Trichloroethene	1	0.5	2	0.5	0.5	0.5	1	0.50	133.41	66.71
Toluene	23000	2.5	40000	2.5	2100	2.5	21,700	2.50	92.15	230.38
Tetrachloroethylene	36	0.05	17	0.05	0.05	0.05	18	0.05	165.83	8.29
Ethylbenzene	3600	2.5	3900	2.5	90	2.5	2,530	2.50	106.17	265.43
m + p , Xylenes	7800	2.5	13000	2.5	260	2.5	7,020	2.50	106.17	265.43
Styrene	4200	2.5	14000	2.5	110	2.5	6,103	2.50	104.16	260.40
o , Xylene	2700	2.5	2700	2.5	7	2.5	1,802	2.50	106.17	265.43
1,2,4 Trimethylbenzene	2.5	5	2.5	8	2.5	67	3	26.67	120.20	3205.33
1,3 Dichlorobenzene	4500	2.5	6900	2.5	33	2.5	3,811	2.50	147.01	367.53
1,2 Dichlorobenzene	160	2.5	210	2.5	2.5	2.5	124	2.50	147.01	367.53
1,2,4 Trichlorobenzene	180	2.5	110	2.5	6	2.5	99	2.50	181.45	453.63
Totals	104294	38.65	192269	41.65	8325.15	**100.65**	101,629	60.3		7063.95

Unit VOC removal eff. (%) = (Total VOC's (inlet) / Total VOC's (outlet)) * 100
60.3 / 101,629 x 100 = **99.94**

VOC's (lb/hr) = (MW x ppbv) x Q x 1.538 E-10
7064.0 X 9,243 X 1.5E-10 = **0.0100**

lb / ton soil = lb/hr / ton soil per hour
0.0100 / 18.160 = **0.0006**

* Constituents which were below the detection limits for all three runs, were not quantified.
** For calculation purposes, half of the detection limit was used for all values in the analysis results shown to be less than the detection limit.

HORIZON

AIR MEASUREMENT SERVICES INC

W02-006-FR

POLYCYCLIC AROMATIC HYDROCARBON (PAH) EMISSIONS FROM A SOIL REMEDIATION SYSTEM

Prepared for:

WEST COAST ENVIRONMENTAL
4245 Market Street, Suite 206
Ventura, California 93003

Prepared by:

HORIZON AIR MEASUREMENT SERVICES, INC.
996 Lawrence Drive, Suite 108
Newbury Park, California 91320

Richard J. Vacherot

1. INTRODUCTION

Under subcontract to WEST COAST ENVIRONMENTAL, HORIZON AIR MEASUREMENT SERVICES, INC. completed an emissions testing program on a thermal soil treatment system operated by Fertech Environmental in Dinuba, California. The purpose of the emissions testing program was to determine polycyclic aromatic hydrocarbons (PAH) emissions from the exhaust of the afterburner controlling emissions from a soil treatment unit. The testing program was completed on May 18 and 19, 1994 by Mr. Ferodie Jesus O. Torres and Mr. Ryan Yanagihara of HORIZON AIR MEASUREMENT SERVICES, INC. Three, replicate test runs were completed using CARB Method 429. Process operation and monitoring was the responsibility of Fertech Environmental.

The results of the testing program are provided in Section 2. The sampling/analytical methods used are provided in Section 3. All pertinent documentation can be found in the Appendices.

2. SUMMARY OF RESULTS

The results of the test program are provided in Table 2-1. The Run #1 PAH emission rate was much higher than that observed for Runs #2 or #3.. During Run #1, on May 18, testing was interrupted for 195 minutes (from 1225 to 1540) due to unit operating problems. During Run #2, May 19, from 1910 to 1955, testing was interrupted due to unit process problems. No process downtime was experienced during Run #3.

Run #2, conducted on May 19, unexpectedly displayed a much higher stack gas moisture (31.9%) than that observed for Run #1 on May 18 (19.0%). As a result, the isokinetic ratio (131%) was outside the acceptable isokinetic limit of 90 to 110%. The measured stack gas moisture observed on May 19 was probably due to the increased moisture of the treated soil due to the steady rainfall prevalent throughout the day. The sampling ratio was adjusted for the increased stack moisture for Run #3, also conducted on May 19, resulting in an acceptable isokinetic sampling ratio. The stack gas moisture for Run #3 (29.0%) was in good agreement with Run #2. Also the sampling time for Run #3 was reduced from 240 minutes to 180 minutes due to the facility operating schedule restrictions.

TABLE 2-1
Stack Gas Characteristics and Process Throughput
May 18/19, 1994

	RUN 1	RUN 2	RUN 3
PROCESS THROUGHPUT			
Average Soil Production Rule (ton/hr)	16.8	18.6	19.0
STACK GAS CHARACTERISTICS			
Temperature (°F)	1740	1760	1753
Moisture (%)	19.0	31.9	29.0
Flow Rate			
(dscfm)	10,199	8761	9144
(acfm)	51,997	53,831	55,754
Fixed Gases			
O_2 (%)	3.0	2.8	2.9
CO_2 (%)	10.1	10.2	10.2
N_2 (%)	86.9	87.0	86.9

TABLE 2-2
Polycyclic Aromatic Hydrocarbon Results
May 18/19, 1994

	Run 1			Run 2			Run 3		
DATE	5-18-94			5-19-94			5-19-94		
CLOCK TIME: INITIAL	1135			835			1525		
CLOCK TIME: FINAL	1845			1320			1852		
	WEIGHT (ug)	CONC. (mg/dscf)	EMISSION RATE (mg/hr)	WEIGHT (ug)	CONC. (mg/dscf)	EMISSION RATE (mg/hr)	WEIGHT (ug)	CONC. (mg/dscf)	EMISSION RATE (mg/hr)
NAPHTHALENE	52.00	2.93E-04	179.50	38.00	2.03E-04	106.57	<8.50	<7.05E-05	<38.65
2-METHYLNAPTHALENE	5.00	2.82E-05	17.26	<2.10	<1.12E-05	<5.89	<2.10	<1.74E-05	<9.55
ACENAPHTHYLENE	17.00	9.59E-05	58.68	0.46	2.45E-06	1.29	<0.15	<1.24E-06	<0.68
ACENAPHTHENE	2.30	1.30E-05	7.94	<0.16	<8.54E-07	<0.45	<0.16	<1.33E-06	<0.73
FLUORENE	4.40	2.48E-05	15.19	<0.60	<3.20E-06	<1.68	<0.60	<4.97E-06	<2.73
PHENANTHRENE	84.00	4.74E-04	289.96	6.40	3.41E-05	17.95	<2.00	<1.66E-05	<9.10
ANTHRACENE	3.60	2.03E-05	12.43	<0.25	<1.33E-06	<0.70	<0.25	<2.07E-06	<1.14
FLUORANTHENE	74.00	4.17E-04	255.44	4.40	2.35E-05	12.34	0.33	2.74E-06	1.50
PYRENE	66.00	3.72E-04	227.83	2.60	1.39E-05	7.29	<0.20	<1.66E-06	<0.91
BENZ(A)ANTHRACENE	22.00	1.24E-04	75.94	0.43	2.29E-06	1.21	0.015	1.24E-07	0.07
CHRYSENE	140.000	7.90E-04	483.27	4.70	2.51E-05	13.18	0.29	2.40E-06	1.32
BENZO(b)FLUORANTHENE	69.000	3.89E-04	238.18	5.10	2.72E-05	14.30	0.18	1.49E-06	0.82
BENZO(K)FLUORANTHENE	34.000	1.92E-04	117.37	1.30	6.94E-06	3.65	0.045	3.73E-07	0.20
BENZO(E)PYRENE	61.000	3.44E-04	210.57	2.20	1.17E-05	6.17	0.055	4.56E-07	0.25
BENZO(A)PYRENE	12.000	6.77E-05	41.42	0.023	1.23E-07	0.06	0.008	6.96E-08	0.04
PERYLENE	2.500	1.41E-05	8.63	0.022	1.17E-07	0.06	0.006	4.72E-08	0.03
INDENO[1,2,3-cd]PYRENE	8.400	4.74E-05	29.00	0.12	6.40E-07	0.34	0.010	8.29E-08	0.05
DIBENZ(A,H)ANTHRACENE	0.980	5.53E-06	3.38	0.016	8.54E-08	0.04	<0.005	<4.14E-08	<0.02
BENZO(G,H,I)PERYLENE	8.500	4.79E-05	29.34	0.056	2.99E-07	0.16	0.012	9.95E-08	0.05

Note: All values preceded by "<" are below the detection limit. Reported results are based upon detection limit values

3. SAMPLING/ANALYTICAL PROCEDURES

3.1 Sample Location

The sample location was approximately 50 feet (16 stack diameters) downstream of any flow disturbance and eight feet (2.6 stack diameters) upstream of the stack exit. Twenty-four sample points (12 per traverse) were used for sample collection/flow rate determination.

3.2 Flow Rate

Stack gas flow rate was determined in conjunction with the PAH sampling using CARB Method 429.

3.3 Fixed Gas Concentration

Fixed gas concentration was determined using an Orsat analyzer as described in CARB Method 3 (see Appendix A).

3.4 Moisture

Stack gas moisture was determined in conjunction with the PAH sampling using CARB Method 429.

3.5 Polycyclic Aromatic Hydrocarbons (PAH's)

Polycyclic aromatic hydrocarbon (PAH) emissions were determined using CARB Method 429 as described in Appendix A. Three replicate test runs were completed. Twenty-four traverse points were used for sample collection.

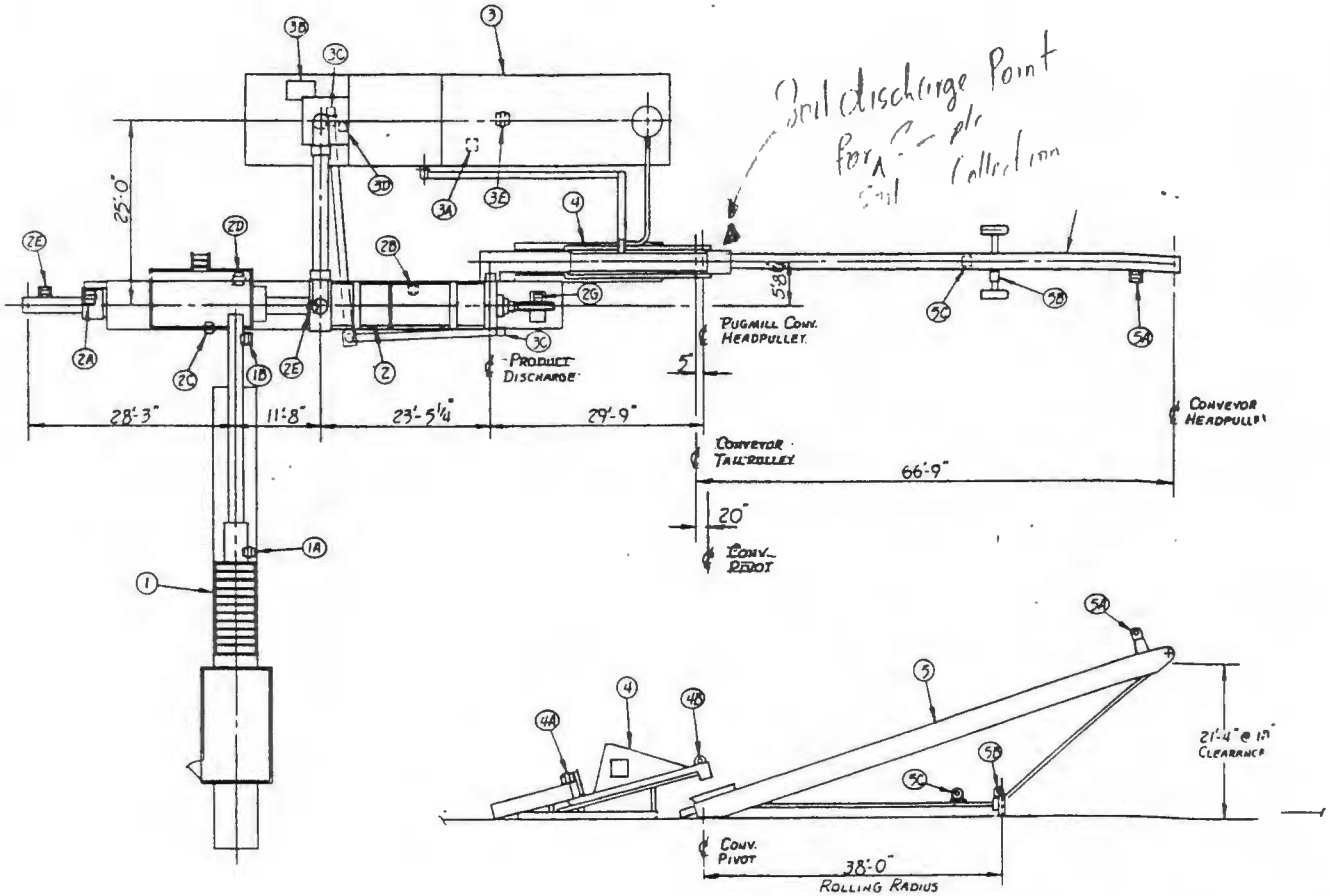

1		S/N 43992	3 [illegible] FEED SYSTEM	1
1A			10 H.P. MOTOR: FEEDER DRIVE	1
1B			10 H.P. MOTOR: CONVEYOR DRIVE	1
2		S/N 43993	64MT SOIL REMEDIATION UNIT	1
2A			50 H.P. MOTOR: IMPACT MILL DRIVE	1
2B			25 H.P. MOTOR: DRUM DRIVE	1
2C			10 H.P. MOTOR: SCREEN DRIVE	1
2D			10 H.P. MOTOR: SCRT CONV DRIVE	1
2E			5 H.P. MOTOR: CONVEYOR DRIVE	1
2F			5 H.P. MOTOR: SLINGER DRIVE	1
2G			30 H.P. MOTOR: TURBO DRIVE	1
3		S/N 43994	64MT EMISSION CONTROL UNIT	1
3A			50 H.P. MOTOR: FAN DRIVE	1
3B			25 H.P. MOTOR: AIR COMPRESSOR	1
3C			5 H.P. MOTOR: DUST AUGERS	2
3D			5 H.P. MOTOR: DRAG SLAT CONV.	1
3E			30 H.P. MOTOR: AFTERBURNER	1
4		S/N 43995	PUGMILL SKID w/ CONVEYOR	1
4A			25 H.P. MOTOR: PUGMILL DRIVE	1
4B			7½ H.P. MOTOR: CONVEYOR DRIVE	1
5		S/N 43996	24" x 70' PORTABLE CONVEYOR	1
5A			15 H.P. MOTOR: CONVEYOR DRIVE	1
5B			2 H.P. MOTOR: RADIAL DRIVE	1
5C			2 H.P. MOTOR: HYDRAULIC LIFT	1

NOTE:

FOR FOUNDATION LAYOUT SEE DRAWING A4000-950-45.

43992-996	FER TECH ENVIRO	ASSEMBLY	N
A4000-900-41	GLADWIN	D A4000-900-45	
	M. Simpson 10-19-93	1/8" = 1'-0"	1 of 1

DRAWING NO. A4000-950-45

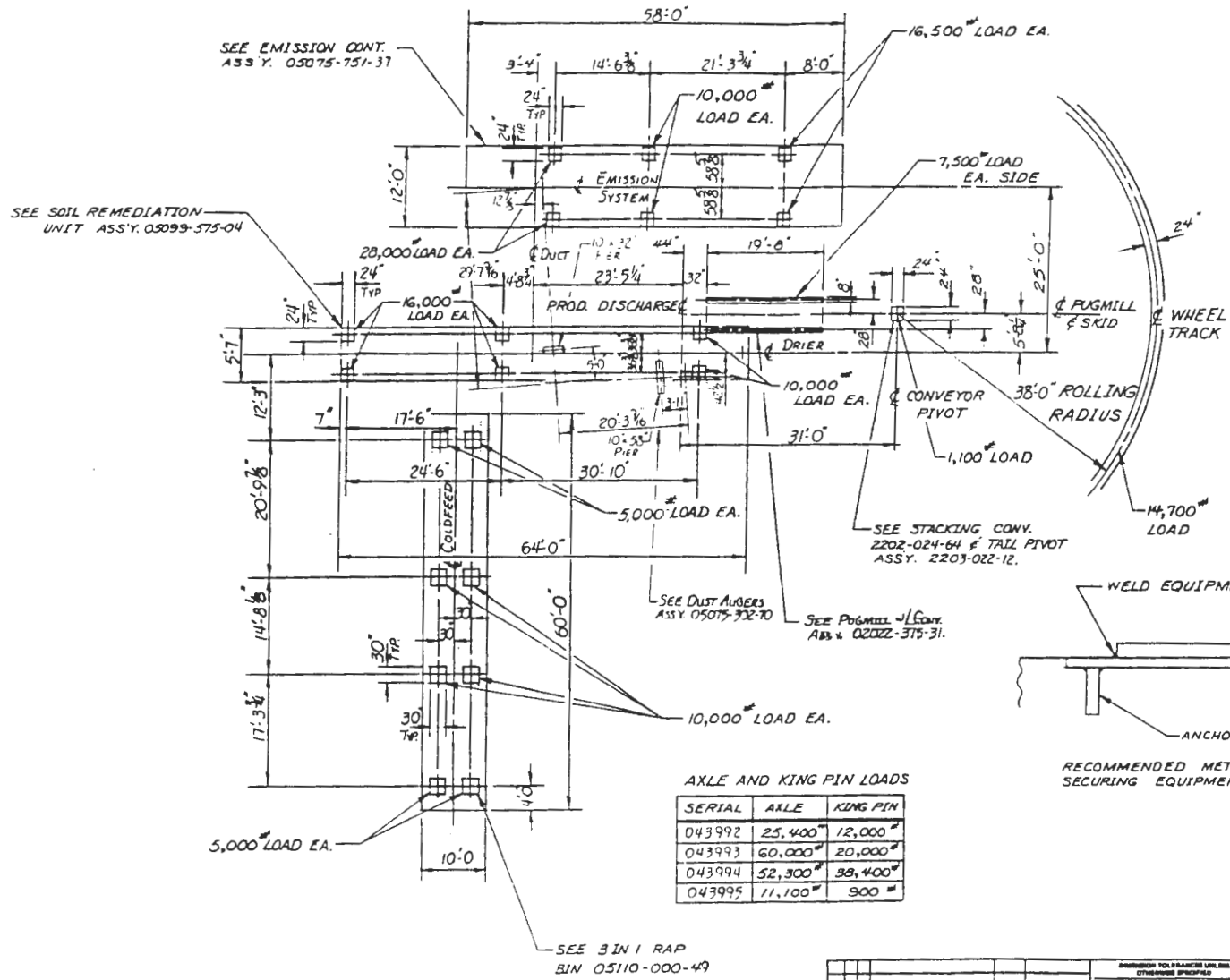

NOTES:

1. FOR PLAN VIEW LAYOUT SEE DRAWING A4000-900-45.
2. CRIBBING SUPPORTS SHOWN ARE BASED ON BEING CARRIED INTO SOIL WITH A SAFE LOAD BEARING CAPACITY OF 4.5 TONS/SQ. FT.

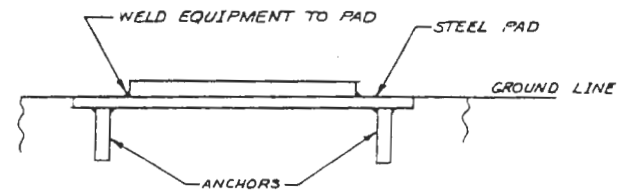

RECOMMENDED METHOD FOR SECURING EQUIPMENT.

AXLE AND KING PIN LOADS

SERIAL	AXLE	KING PIN
043992	25,400#	12,000#
043993	60,000#	20,000#
043994	52,300#	38,400#
043995	11,100#	900#

FOUNDATION - FER TECH ENVIRO

ASSEMBLY

A4000-950-41

D A4000-950-45

DRAWING NO. 05110-000-49

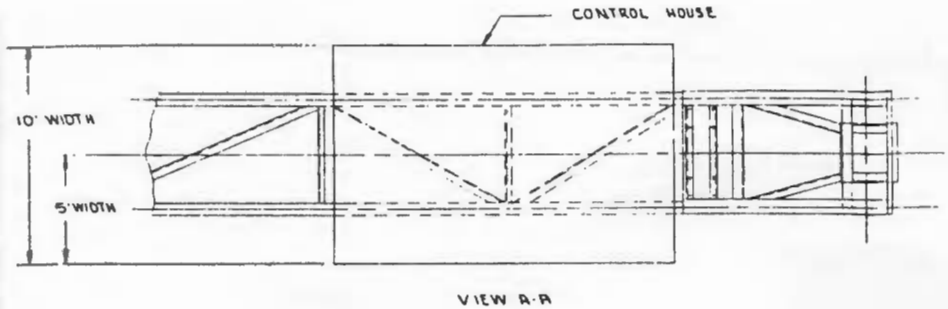

ITEM	SH	PART NO/PATTERN NO	DESCRIPTION	REQ
23		01377-100-36	AIR BRAKE CONTROLS	1
24		01377-100-37	AIR CONTROLS	1
25		01503-062-51	LIGHTS	1
26		05130-250-44	SKIRTBOARD 57' SECT.	1
27		08060-017-02	SKIRT BOARD 8' SECT	1
28		05130-250-48	SKIRT BOARD 6' SECT	1
29		05124-225-37	SKIRT BOARD HD SECT	1
30		08060-020-03	SKIRT BOARD GUARD 8'	1
31		05130-250-50	SKIRT BOARD GUARD 6'	1
32		05124-225-40	HEAD GUARD ROLL	1
33		05124-250-20	57' GUARD ROLL	1
34		05124-475-45	CABLE BRACKET	1
35		05110-475-38	GRIZZLEY	1
36		05110-475-40	HYDRA LIFT-GRIZZLEY	1
37		05110-576-47	DRIBBLE CHUTE	1
38		05130-350-09	BELT WIPER (DURT HAWG)	1
39		05130-250-45	SKIRT BOARD 57' SECT	1
40		05130-350-17	DEFLECTOR CONV	1
41		05130-250-52	SKIRT BOARD (METAL DECT)	1
42		05124-475-51	METAL DETECTOR	1

ITEM	SHEET	PART NO/PATTERN NO	DESCRIPTION	REQ
1		05001-200-76	CONTROL HOUSE	1
2		05110-400-18	BIN FRAME	1
3		05110-375-88	OPERATING SUPPORT	1
4		05110-375-92	BULKHEAD	1
5		05130-000-72	SLAT CONVEYOR	1
6		05130-050-87	FOR DRIVE LZIST	1
7		05130-025-27	FEEDER CONTROL GATE	1
8		05130-350-12	FEEDER DEFLECTORS	1
9		01330-770	GUARD RETURN ROLL	3
10		05124-300-08	POWER MTG. 10HP	1
11		05130-225-94	HEAD SECTION	1
12		05130-275-39	TAIL SECTION	1
13		08060G01	12'-0" CONV. SECT.	1
14		08060G0102	8'-0" CONV. SECT.	1
15		05130-250-43	57" CONV SECT.	1
16		08060G15	HINGE	1
17		05110-576-44	CONV. SUPPORT	1
18		05130-350-07	CONV. HD GUARD	1
19		05130-325-01	BELT IDLER SHAFT & PULL	1
20		05110-525-19	DECALS & INSTRUCTIONS	1
21		05110-450-22	AIR SUSPENSION & AXLE	1
22		01377-300-04	11 x 225 TIRES	8

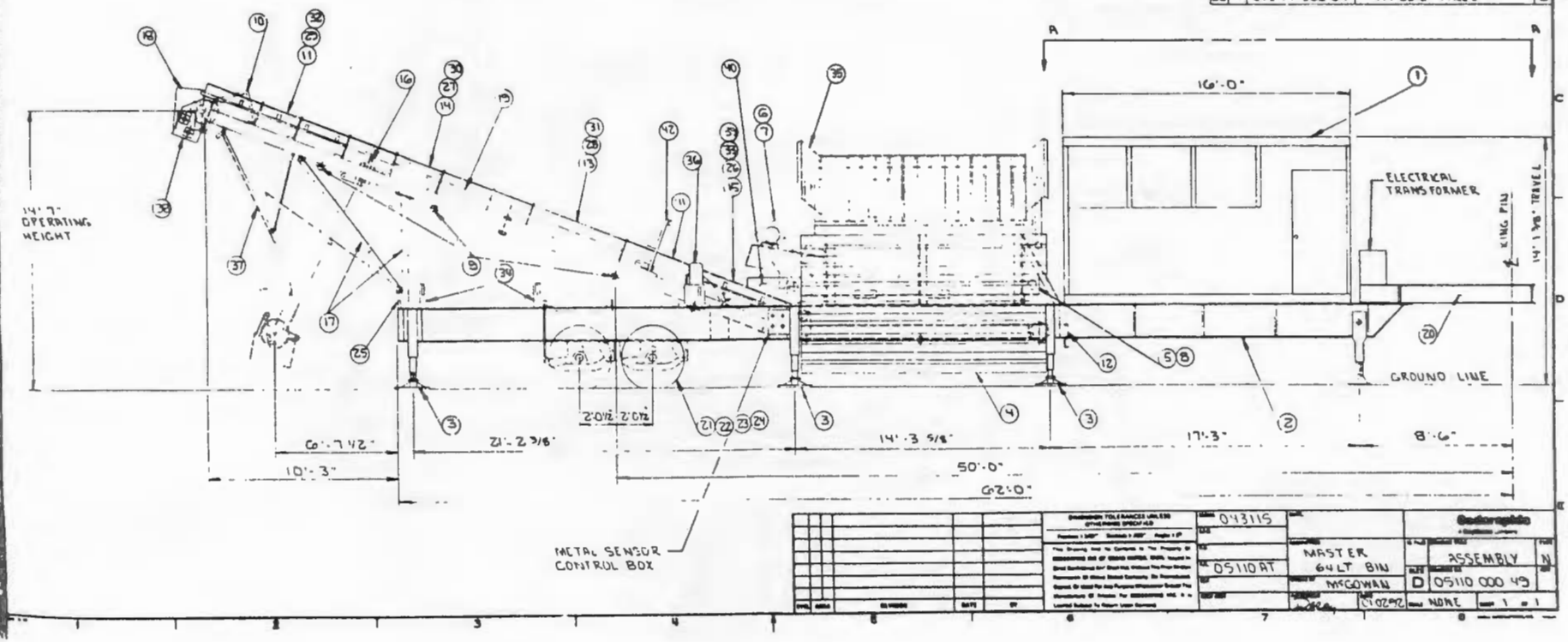

043115	MASTER 64LT BIN	ASSEMBLY	N
05110AT	McGOWAN	D 05110 000 49	
	01-02-92	NONE	1 of 1

DRAWING NO 05099-575-04

ITEM	SHT	PART NO/PATTERN NO	DESCRIPTION	REQ
17		05099-425-08	DRIVE, SCREEN	1
18		08400-010-04	FEED HOUSING	1
19		08400-000-03	IMPACT MILL	1
20		06040-001-61	HAMMER ARM & TIP	24/4
21		05099-225-10	DRIVE, IMPACT MILL	1
22		08400-240-65	MILL SHAFT GUARD	1
23		05099-250-33	BELT CONVEYOR	1
24		05099-300-30	DRIVE, CONVEYOR	1
25		01503-062-51	RUNNING LIGHTS	1
26		01377-300-04	WHEEL	1
27		05099-150-06	AXLES & SUSPENSION	1
28		05099-150-03	AIR BRAKE CONTROLS	1
29		05099-175-10	AIR CONTROLS	1
30		05099-175-16	JACKS	1
31		05099-025-30	DISCHARGE CHUTE	1

ITEM	SHT	PART NO/PATTERN NO	DESCRIPTION	REQ
1		05099-000-07	FRAME	1
2		05099-050-01	BURNER	1
3		05099-025-01	DISCHARGE BOX	1
4		05099-450-01	DUST INLET	1
5		05099-000-02	TRUNNION	1
6		05062-000-62	DRUM	1
7		05099-075-01	DRUM DRIVE	1
8		05099-100-35	EXHAUST HOOD	1
9		05099-125-67	SLINGER CONV.	1
10		05099-125-58	SLINGER DRIVE	1
11		05099-125-48	SPEED SENSOR	1
12		05099-325-27	BIN HOPPER	1
13		05099-275-18	MAIN SLAT CONV.	1
14		05099-300-25	DRIVE, MAIN SLAT CONV.	1
15		05099-550-45	BIN WALKWAY	1
16		05099-400-04	SCREEN	1

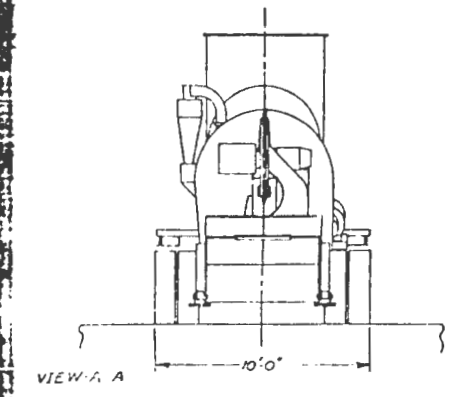

VIEW A-A

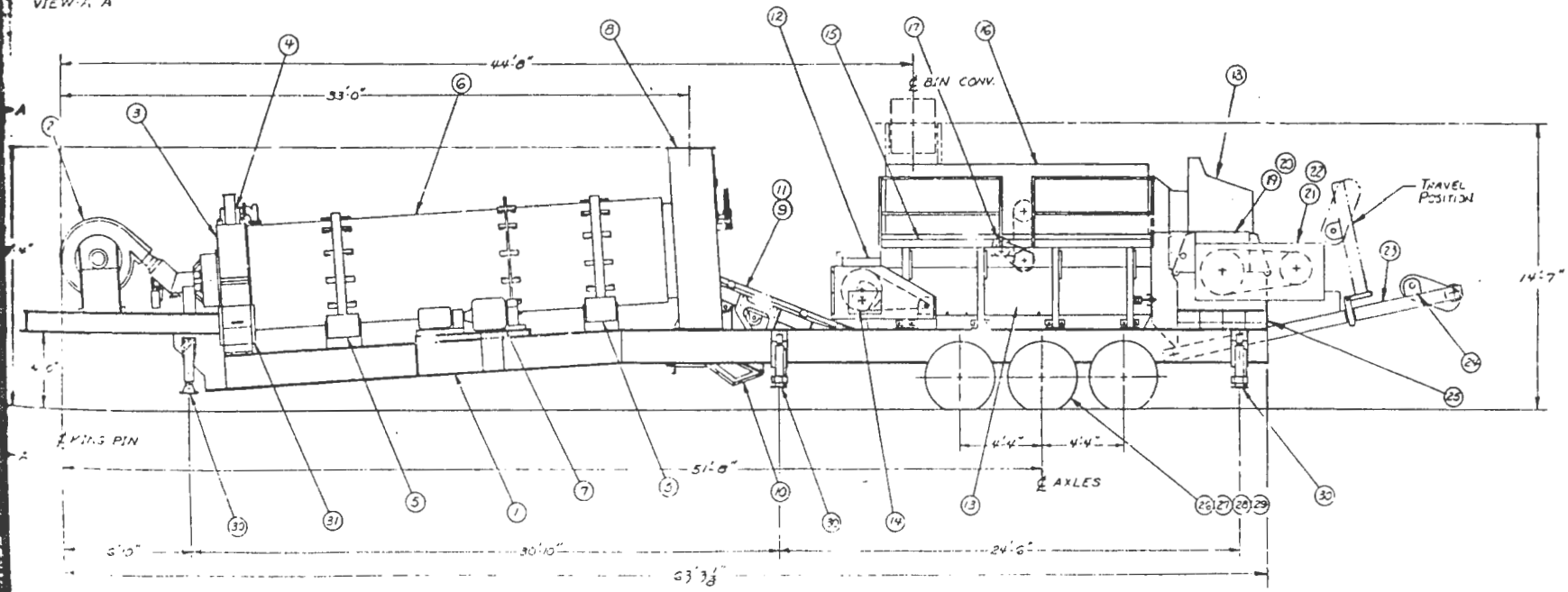

DIMENSION TOLERANCES UNLESS OTHERWISE SPECIFIED	43116		Cedarapids	
	GALT SOIL REMED UNIT		ASSEMBLY	N
	GLADWIN		D 05099-575-04	
		3-14-92	1/8"=1'-0"	SHT 1 of 1

DRAWING NO. 02022-375-31

3		05075-727-01	VENT	1
4		05075-727-02	COVER	1
15		04446-008-20	CLAMP	2
16		07072-106	CAPR BOLT 1/2" NC x 3 1/2	4
17		45890-102-28	Lock Nut 1/2" NC	4
18		05099-025-53	SEAL	1
19		05099-025-54	CLAMP	2
20		05099-025-55	CLAMP	2

ITEM		PART NO. / PATTERN NO.	DESCRIPTION	REQ.
1		02022-375-39	FRAME	1
2		02022-375-10	ANGLE	4
3		07383-114	CAPSCREW - 3/4" NC x 2 1/4"	16
4		07014-023	WASHER - 3/4" FLAT	40
5		07014-009	WASHER - 3/4" LOCK	24
6		07012-030	HEX NUT - 3/4" NC	24
7		07022-004	WASHER - 3/4" BEVEL	8
8		07383-070	CAPSCREW - 1/2" NC x 1 1/2"	10
9		07014-020	WASHER - 1/2" FLAT	22
10		07014-005	WASHER - 1/2" LOCK	22
11		07012-027	HEX NUT - 1/2" NC	22
12		07383-120	CAPSCREW - 3/4" x 2 1/2"	8

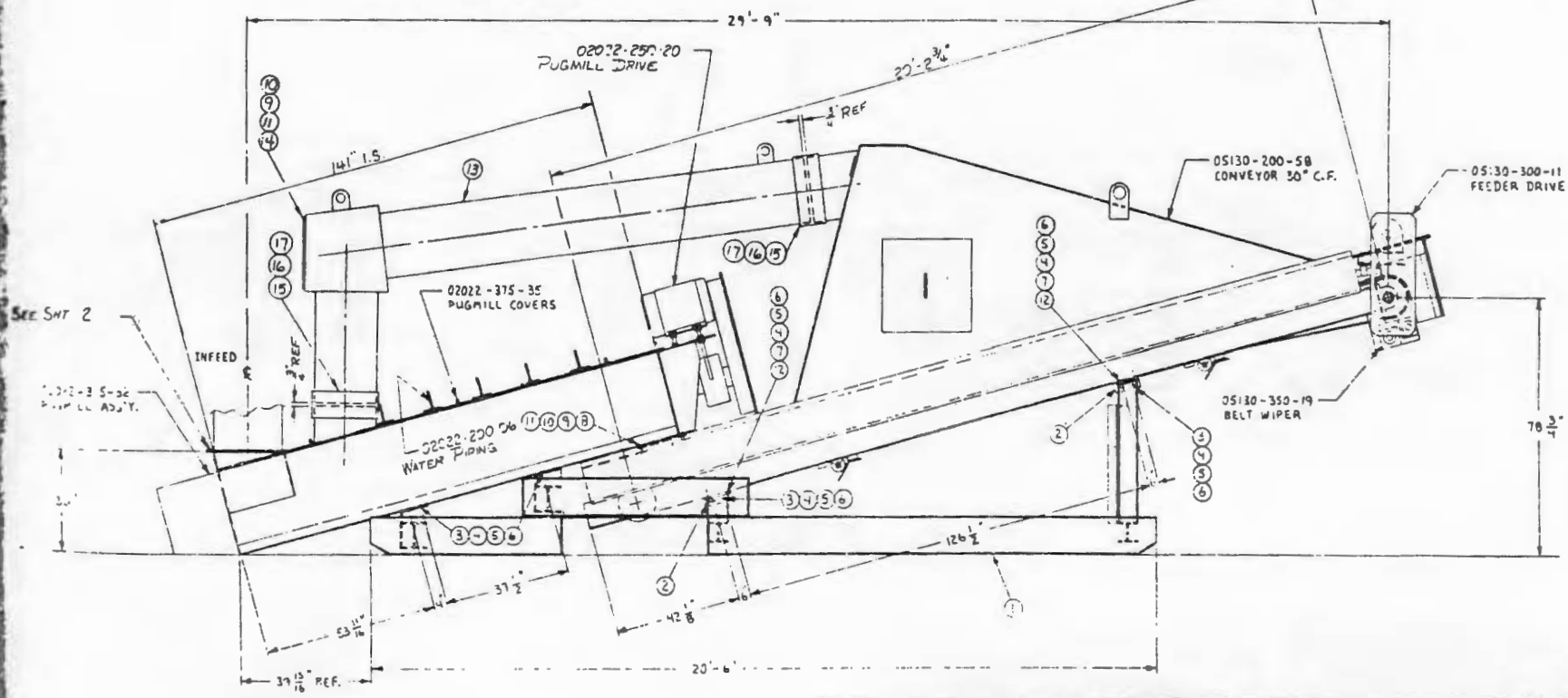

	ADDED ITEMS 3-20	J.R.B.	MIC.	02022 R2 • RAC	SUPPORT SKID, PUGMILL & 30" CONVEYOR
				05075-727-02	R. JOHNSON

Sedaratgide

ASSEMBLY

D 02022-375-31 A

3-3-92 1/4" = 1'-0" 1 of 2

DRAWING NO. 05090-600-50

ITEM	REV LTR	PART NUMBER	DESCRIPTION	REQ
1		05090 600 24	SUPPORT STACK	1
2		05090 600 60	STACK COVER	1
3				
4		05130 200 57	COVER	1
5		05090 600 41	CAP	1
6		07383 102	CAPSCREW 5/8" NC x 2"	4
7		07014 022	WASHER 5/8"	28
8		07014 007	WASHER 5/8" LOCK	4
9		07012 029	HEX NUT 5/8" NC	14
10		07018 034	SET SCREW 1/2" x 1"	8
11		07468 007	CAPSCREW 1/2" NC x 2" SS	24
12		45890 255 17	WASHER 1/2" SS	24
13		45890 255 14	WASHER 1/2" LOCK SS	24
14		07469 001	HEX NUT 1/2" SS	24

Existing Posts
for Source Monitoring.
50-60 ft. off the
Ground.

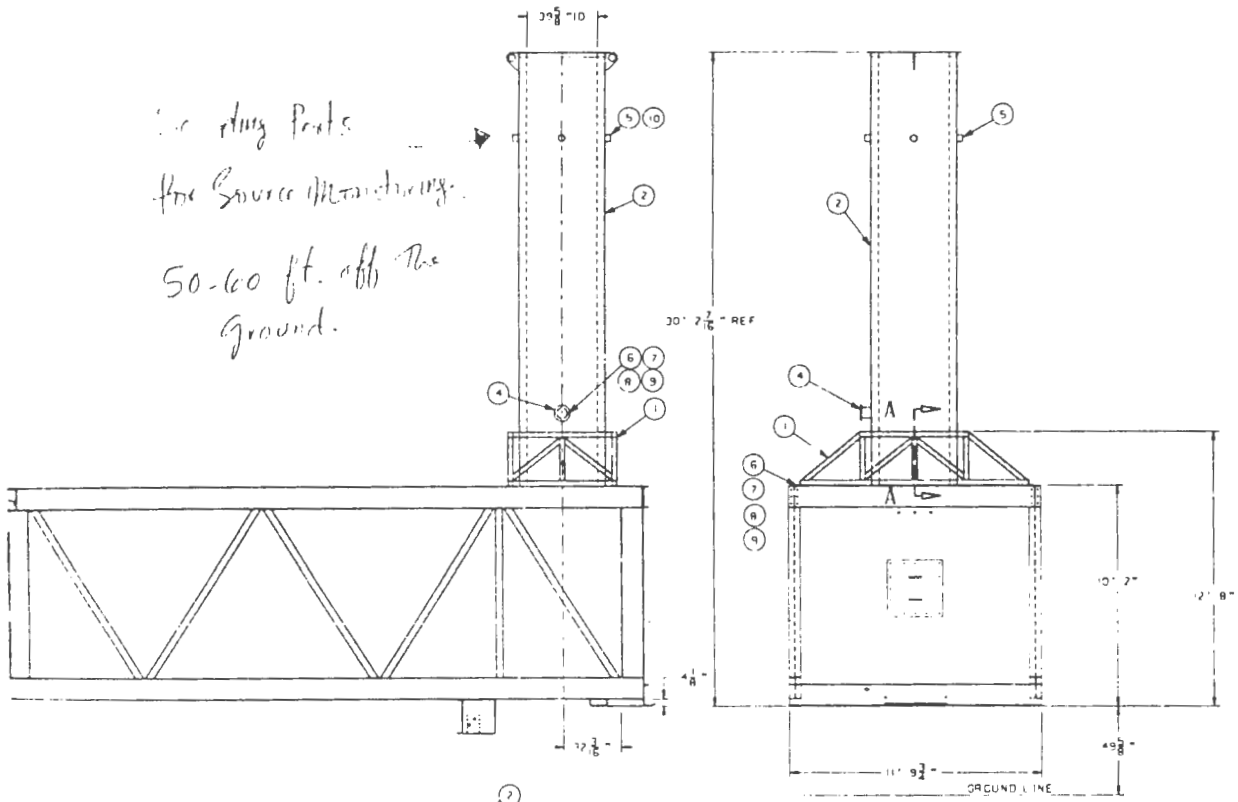

ITEM 5 & 10 ARE TO BE INSTALLED OVER COUPLINGS WHEN NOT IN USE.

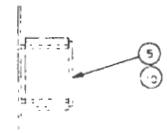

TYP CAPSCREWS
SCALE 1" = 2"

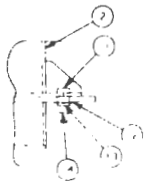

VIEW A-A
SCALE 3" = 2"

CALC. WT. (LBS)

DIMENSIONS & TOLERANCES UNLESS OTHERWISE SPECIFIED
Fractions ±1/64" Decimals ±.005" Angles ±1°

This Drawing Is Subject To Copyright In The Property Of CEDARAPIDS, INC. OF CEDAR RAPIDS, IOWA, Issued In Strict Confidence And Shall Not Without The Prior Written Permission Of Above Stated Company, Be Reproduced, Copied, Or Used For Any Purpose Whatsoever Except The Manufacture Of Items For CEDARAPIDS, INC. Or Its Licensed Subsidiaries Or Return Upon Demand

REV	ZONE	REVISION	DATE	BY
B	7	A	REV 7 DES 05090 600 40	5 21 92	R JOHNSON
A			REV 3 DES 05130 200 57	1 3 92	SPERRY

MATL 43262
FINISH
NEXT
PO 5090988
REF
NEXT ASSY

DESCRIPTION: ASSEMBLY STACK MTG.
DRAWN BY: SPERRY
SUPERV. BY: M. SIL
DATE: 3 27 92

CAD FILE NO.

Cedarapids
A Raytheon Company

SIZE: D
DRAWING TITLE: ASSY.
DRAWING NO.: 05090-600-50
REV: B
SCALE: 3/8" = 1"
SHEET: 1 OF 1

DRAWING NO. 05075-751-37

ITEM	PART NO.	DESCRIPTION	REQ
37	05075WWZ	MOTOR CONTROL CENTER MTG	1
38	01503-277-86	POWER UNIT ENCLOSURE	1
39	05000BB	KING PIN	1
40	05075YCC	EXHAUST FAN VACUUM	1
41	46106-518-06	5 HP MOTOR	1
42	05075-136-10	REAR FRAME	1
43	05130 10-56	COVER	2
44	07589-039	CAPSCREW-3/8" NC x 1 1/4"	16
45	07014-003	WASHER - 3/8" LOCK	16
46	01505YYQ	BURNER GAS WIRING	1

ITEM	PART NO/PATTERN NO	DESCRIPTION	REQ
19	05075CBU	FAN SUPPORT W/FAN & DRIVE	1
20	05075RAL	AIR COMPRESSOR MTG.	1
21	05075-176-20	B. & CAGE	REF
22	01503NNY	F.F. WIRING	1
23	05075-176-10-01	CAGE	REF
24	05075-176-11-05	BAG HIGH TEMP	REF
25	05075FBK	AIR DOOR CONTROLS	1
26	01503NQB	PULSE PANEL	1
27	05075YZQ	DECAL LOCATION	1
28	45050-003-10	AIR COMPRESSOR - 2SHP	1
29	56020-004-0[illegible]	WIRING CABLE	70
30	05075-626-43	JACK MODIFICATION	1
31	05075-676-14	GENERATOR SET MTG.	1
32	46150-002-49	CUMMINGS GEN SET	1
33	46105-518-04	3HP MOTOR	1
34	05090-600-02	AFTERBURNER, TURBO, BURNER,	1
35	05090-600-20	BRACE	5
36	05090- 10-22	CHANNEL	1

	ITEM	PART NO/PATTERN NO	DESCRIPTION	REQ
	1	05075-136-09	HOUSE ASSY	1
	2	05075-278-30	CONVEYOR	1
	3	01377-300-04	WHEEL ASS'Y	12
	4	05075-235-68	PRIMARY	1
A	5	05075-601-40	AXLE ASSY W/RISER	1
	6	05075-281-40	DRIVE ASSY	1
A	7	05075-675-70	CONDUIT BOX	1
	8	05075RTC	MAGNEHELIC GAGE ANGLE	1
	9	05075UWJ	LANDING GEAR	6
	10	05083WL	SPLASH GUARDS & LIGHTS	1
	11	05083WH	TAIL LIGHT WIRING	1
	12	05075LBR	PILOT VALVE ASSY.	1
A	13	05075-601-47	AIR BRAKE ASSY	1
A	14	05015-661-51	RUNNING GEAR	1
	15	05075AS	MAGNEHELIC TO PULSE PANEL	1
	16	05075-280-68	HIGH LIFT DISCHARGE	1
	17	01505YYW	A.B. CONTROL ACCESSORIES	1
	18	50125-003-01	NYLON TUBING	18

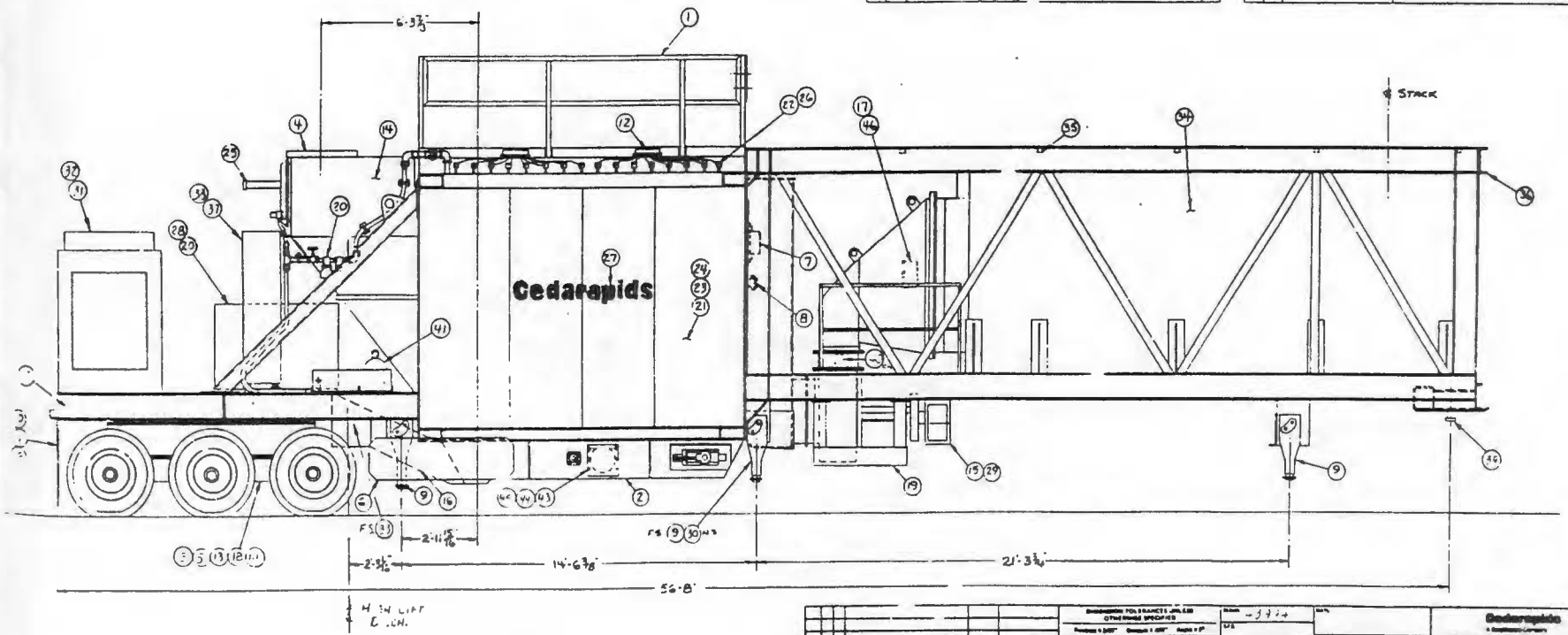

A	MOUNTED ON RUNNING GEAR		
REV.	REVISION	DATE	BY

SYSTEM GEN MT EMISSION CONTROL

05075ZCQ

05075-751-37

J. ADAMS

J. STEVENSON

2-15-93

Cedarapids

ASSEMBLY

N

D 05075-751-37 A

1/2"=1'-0"

1 of 1

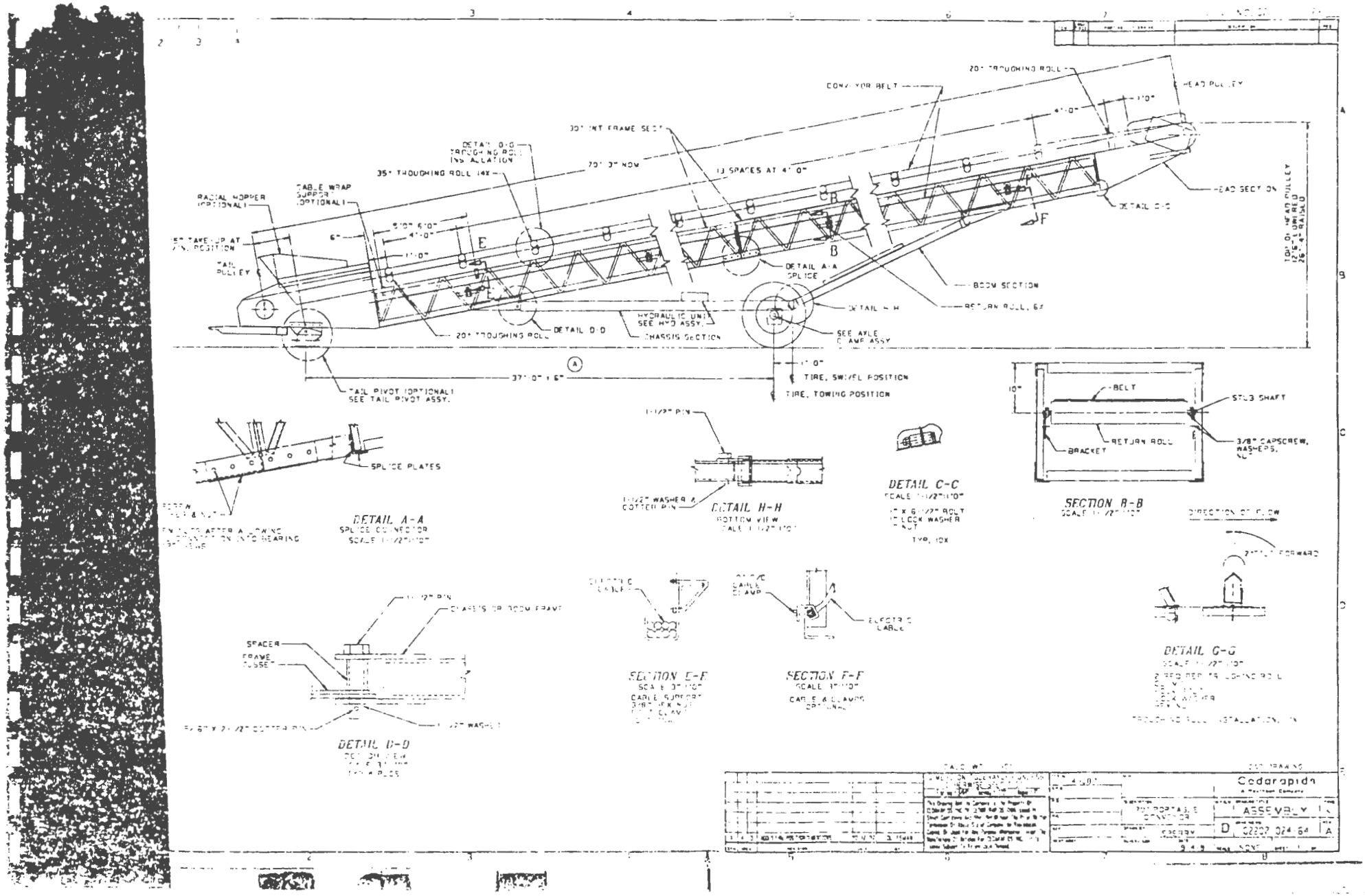

20° TROUGHING ROLL
CONVEYOR BELT
HEAD PULLEY
30° INT FRAME SECT
DETAIL D-D TROUGHING ROLL INSTALLATION
35° TROUGHING ROLL 14X
70' 3" NOM
13 SPACES AT 4'-0"
CABLE WRAP SUPPORT (OPTIONAL)
RADIAL HOPPER (OPTIONAL)
15" TAKE-UP AT 2 IN. POSITION
TAIL PULLEY
HEAD SECTION
DETAIL C-C
DETAIL A-A SPLICE
BOOM SECTION
RETURN ROLL, 6X
DETAIL H-H
HYDRAULIC UNIT SEE HYD ASSY.
CHASSIS SECTION
20° TROUGHING ROLL
DETAIL D-D
SEE AXLE CLAMP ASSY
TOP OF HEAD PULLEY 12'6" LOWERED 26'4" RAISED
37'-0" ± 6"
TIRE, SWIVEL POSITION
TIRE, TOWING POSITION
TAIL PIVOT (OPTIONAL) SEE TAIL PIVOT ASSY.
SPLICE PLATES
DETAIL A-A
SPLICE CONNECTOR
1-1/2" PIN
1-1/2" WASHER & COTTER PIN
DETAIL H-H
BOTTOM VIEW
DETAIL C-C
TYP. 10X
BELT
STUB SHAFT
RETURN ROLL
BRACKET
3/8" CAPSCREW, WASHERS, NUT
SECTION B-B
DIRECTION OF FLOW
FORWARD
DETAIL G-G
SPACER
FRAME GUSSET
CHASSIS OR BOOM FRAME
DETAIL D-D
SECTION E-E
CABLE SUPPORT
SECTION F-F
CABLE & CLAMPS (OPTIONAL)
ELECTRIC CABLE
Cedarapids
ASSEMBLY
D
02207 024 64
A

DRAWING NO. 1503-182-20

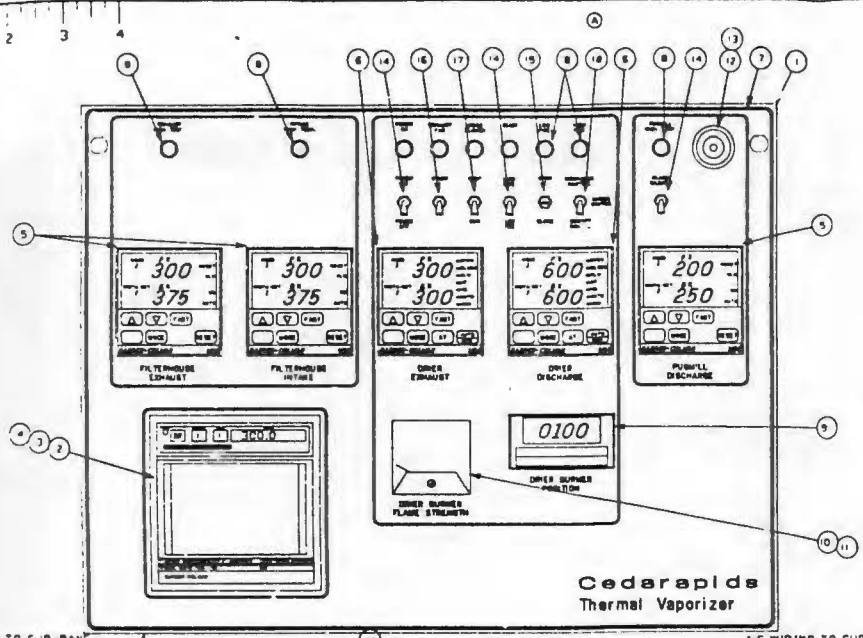

DRYER BURNER POSITION METER SWITCH SETTINGS AND ADJUSTMENTS.

SET EXCITATION POWER SUPPLY FOR 12VDC.

123 — DECIMAL POINT SETTING

VOLT HI / CURR LO — 0-10VDC OR 2-10VDC — SIGNAL INPUT SETTING

ON / OFFSET / OFF — OFFSET ON FOR NON BIASED ZERO INPUT — OFFSET ENABLE

PCT SETTINGS

OFFSET — OFFSET ADJUST (ZERO) — C=COARSE F=FINE

SPAN — SPAN ADJUST — C=COARSE F=FINE

1	503-007-5	SIGN, FRONT DOOR 24" CADFORMICA GREY	1
2	46060-261-44-01	RECORDER, 1-AMP 6 POINT	1
3	46060-261-44-02	RECORDER CHARTS	1
4	46060-261-44-03	RIBBON CARTRIDGE, 6 COLOR	1
5	46060-261-48-02	TEMP. LIMIT CONTROLLER 600 DEG F	3
6	46060-261-48-01	TEMP. CONTROLLER 600 DEG F	2
7	4418-746	DECAL, BURNER OVERLAY	1
8	46270-001-48	INDICATOR, NEON 115VAC RED	9
9	46225-002-50	METER, FLDSCHLEABLE WITH PWR SUPPLY	1
10	46060-261-21-17	METER, FLAME STRENGTH INDICATION	1
11	46060-261-21-17	PLUG, FLAME STRENGTH INDICATION	1
12	46010-001-24	ALARM, AUDIBLE	1
13	46960-002-91	RESISTOR, 5K OHM 5 WATT	1
14	46200-009-47	SWITCH, TOGGLE DPDT MAIN	3
15	46200-009-48	SWITCH, TOGGLE DPDT MOM.	1
16	46200-009-49	SWITCH, TOGGLE DPDT MOM.	1
17	46200-009-56	SWITCH, TOGGLE DPDT MAIN RED HANDLE	1
18	46200-009-52	SWITCH, TOGGLE DPDT MAIN 3 POS	1

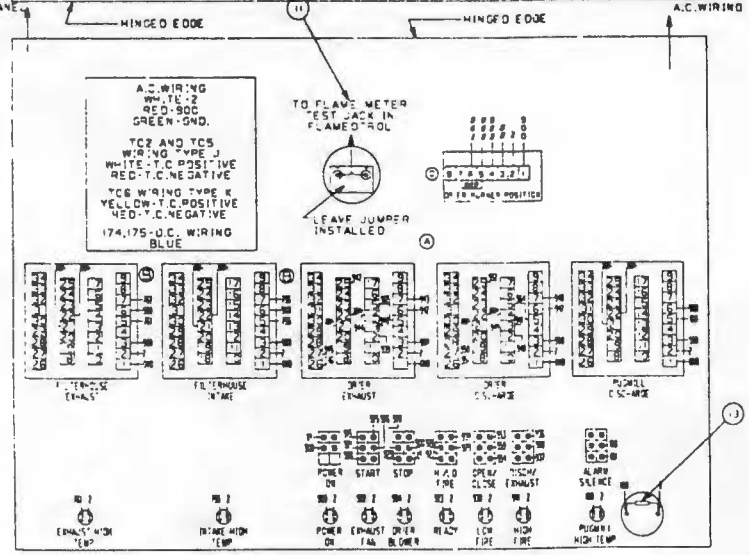

NOTES:
1. INSTALL 4418-746 DECAL TO FRONT PANEL AS SHOWN.
2. SEE C-1503-155-97 FOR BAGHOUSE SCHEMATIC DIAGRAM.
3. SEE C-1503-230-15 FOR PUGMILL SCHEMATIC DIAGRAM
4. SEE D-1503-182-21 FOR SUB PANEL WIRING
5. SEE D-1503-182-22 FOR BURNER SCHEMATIC DIAGRAM

CALC. WT. (LBS)

B	3	6	ADD TERMINAL NO. 6 TO DRYER BURNER POS.	11-7-97	J. LOSCH
C	7	8	ADD 3K OHM 2 WATT RESISTOR	9-11-97	L. PICKART
B	7	8	REVISED WIRES TERMINALS 5 & 6	2-20-97	E. WEIGAND
A	7	6	ADDED ITEM NO. 18	2/10/92	D. YANSKY
A	3	6	ADDED JUMPER FROM 5 TO 18	2/14/92	D. YANSKY

DIMENSION TOLERANCES UNLESS OTHERWISE SPECIFIED:

DATE 4-25-89
1503YYB
1503-182-08
46060-261-48

SOIL BURNER CONTROL FRONT PANEL LAYOUT

DAVE YANSKY
BOWMAN 1/28/92

CAD DRAWING

Cedarapids
A Raytheon Company

ASSEMBLY

D 1503-182-20 D

DRAWING NO. 1503-182-24

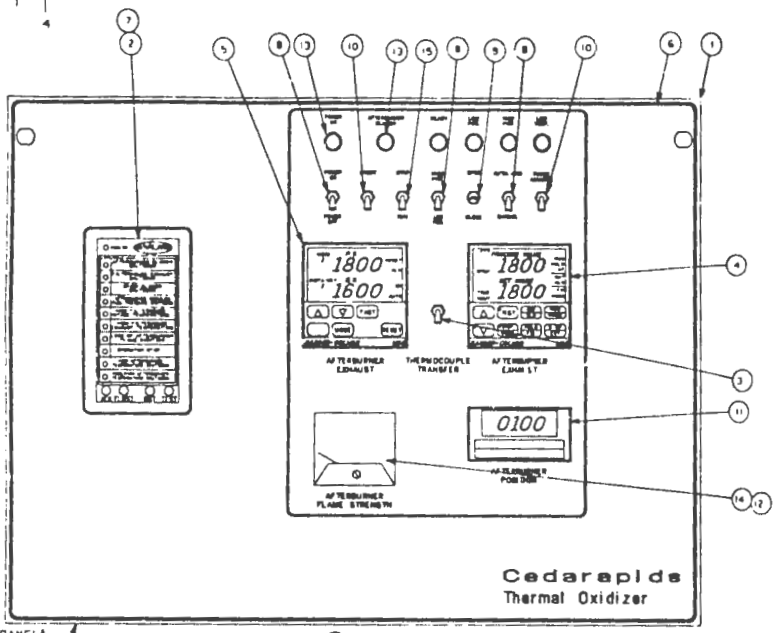

AFTERBURNER POSITION METER SWITCH SETTINGS AND ADJUSTMENTS

SET EXCITATION POWER SUPPLY FOR 12VDC

B — 1000 DECIMAL POINT SETTING

VOLT HI / CURR LO — 0-10VDC OR 2-10VDC SIGNAL INPUT SETTING

ON OFFSET OFF — OFFSET ON FOR NON BIASED ZERO INPUT — OFFSET ENABLE

POT SETTINGS

OFFSET C F — OFFSET ADJUST (ZERO) — C COARSE F FINE

SPAN C F — SPAN ADJUST — C COARSE F FINE

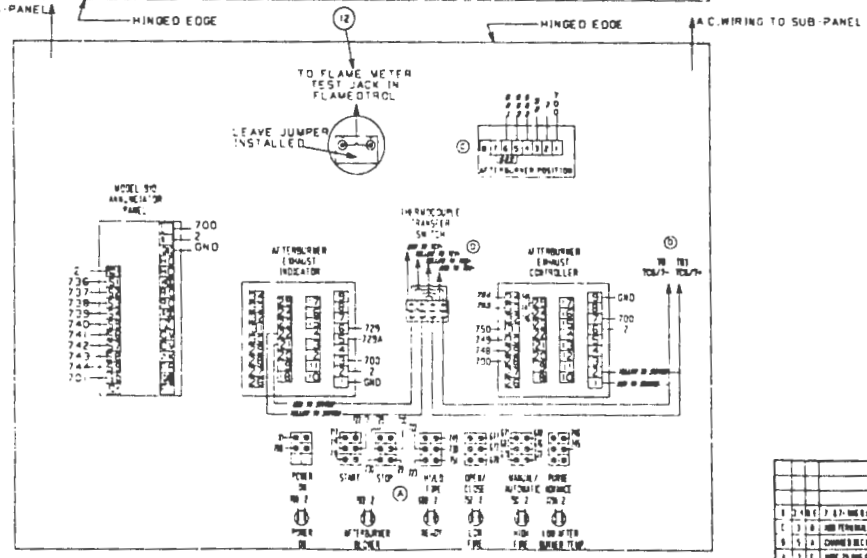

ITEM	QTY	PART NO/PATTERN NO	DESCRIPTION	REQ
1		1503-007-16	PLANT FRONT DOOR 24"OAD FORMICA GREY	1
2		46060-261-45-01	MODEL 910 ANNUNCIATOR	1
3		46200-009-55	SWITCH,THERMOCOUPLE TRANSFER	1
4		46060-261-45-02	TEMP. CONTROL,RAMP/SOAK MAP	1
5		46060-261-45-03	TEMP. LIMIT CONTROL,MAO	1
6		4418-747	DECAL,AFTERBURNR OVERLAY	1
7		4418-743	DECAL,IDENTIFICATION SHEET	1
8		46200-009-47	SWITCH,TOGGLE DPDT MAIN.	3
9		46200-009-48	SWITCH,TOGGLE DPDT MOM.	1
10		46200-009-49	SWITCH,TOGGLE DPDT MOM.	2
11		46225-002-50	POSITION INDICATOR	1
12		46060-2..-21-11	PLUG,FLAME STRENGTH INDICATION	1
13		46270-001-48	INDICATOR,NEON 115VAC RED	6
14		46060-261-21-17	METER,FLAME STRENGTH INDICATION	1
15		46200-009-56	SWITCH,TOGGLE DPDT MAIN RED HANDLE	1

NOTES:
1. INSTALL 4418-747 DECAL TO FRONT PANEL AS SHOWN.
2. INSTALL INSULATED CABLE TO STOP DOOR FROM OPENING PAST MAXIMUM HINGE POINT.
3. SEE D-1503-182-25 FOR SUB PANEL WIRING.
4. SEE D-1503-182-26 FOR SCHEMATIC DIAGRAM.

REV					
B	2	A	B	7 27-1 [illegible]	2 10 92	J.L.OSCH
C	3	A	B	ADD TERMINAL NO. 8 TO AFTERBURNER POS.	11 7 92	J.L.OSCH
D	5	A		CHANGED DECIMAL POINT SETTING	5 11 92	L. PICKART
E	3	C		[illegible]	2 25 93	R. BROWN

CALC. WT. (LBS):

DIMENSION TOLERANCES UNLESS OTHERWISE SPECIFIED:

This Drawing And Its Contents Is The Property Of CEDARAPIDS INC. Or CEDAR RAPIDS INC. Issued In Strict Confidence And Shall Not Be Used, Nor Shown Or Made Permanent Or Alone Shared Concerns, Be Reproduced, Copied, Or Used For Any Purpose Whatsoever Except The Manufacture Or Articles For CEDARAPIDS INC. Or Is Loaned Subject To Return Upon Demand.

DRAWN	4-11-5-119
DATE	
REV	
PCL	1505YYE
REV	1503-182-11
NEXT ASSY	46060-261-49

CAD DRAWING

Cedarapids
A Raytheon Company

DESCRIPTION: 503 AFTERBURNER CONTROL FRONT PANEL LAYOUT

DRAWN BY: DAVE YANSKY

SUPERVISOR: BOWMAN

DATE: 1-29-92

DRAWING TYPE: ASSEMBLY

REV: N

SIZE: D

DRAWING NO: 1503-182-24

REV: D

DRAWING NO. 01503-297-87

NOTES:
1. INSTALL 4418-759 DECAL TO FRONT PANEL AS SHOWN.
2. INSTALL 4418-280 DECAL ON UPPER L.H. CORNER OF LOWER DOOR.
3. COVER UNUSED HOLES WITH CLOSING PLATES.

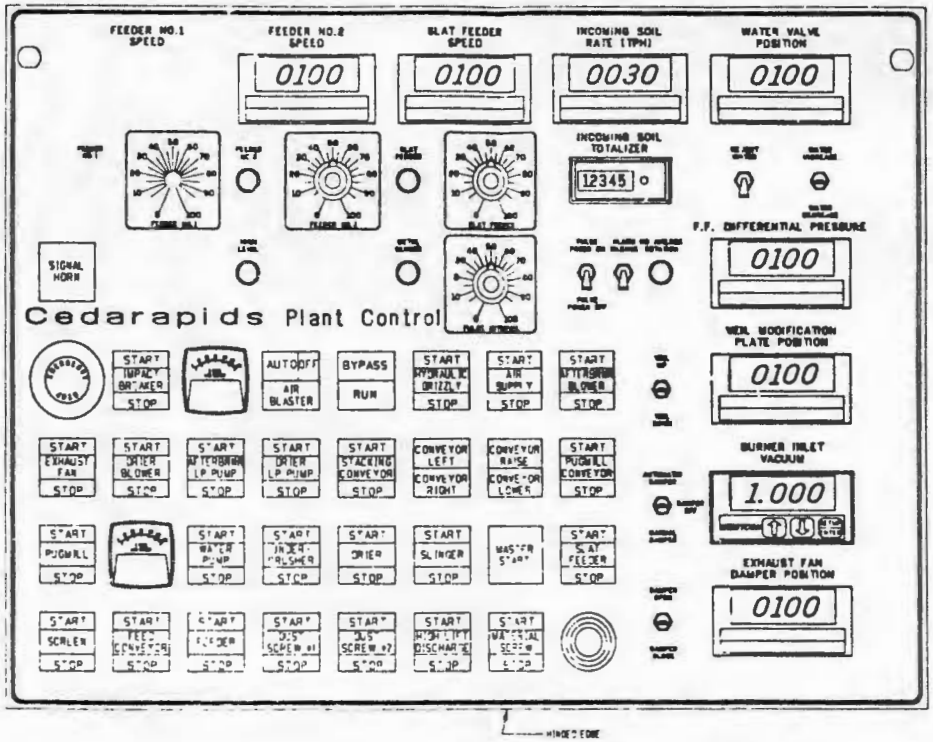

CALC. WT. (LBS)

CAD DRAWING

DIMENSION TOLERANCES UNLESS OTHERWISE SPECIFIED:	M.R.N. 43992-43996	MATL	Cedarapids A Raytheon Company
This Drawing And Its Contents Is The Property Of CEDARAPIDS INC OF CEDAR RAPIDS, IOWA Issued In Strict Confidence And Shall Not, Without The Prior Written Permission Of Above Stated Company, be Reproduced, Copied, Or Used For Any Purpose Whatsoever Except The Manufacture Of Articles For CEDARAPIDS INC. It Is Loaned Subject To Return Upon Demand.	P.A. C1503SDL	DESCRIPTION PUSHBUTTON LAYOUT	TITLE ASSEMBLY; TYPE N
	REF. 01503-297-68	DRAWN BY DUITSMAN	C; DRAWING NO. 01503-297-87; REV.
		SUPERVISOR BOWMAN; DATE 9-10-93	SCALE 1/2"=1"; SHEET 1 OF 1

D. Wehner

NEW YORK STATE DEPARTMENT OF ENVIRONMENTAL CONSERVATION
50 Wolf Road, Albany, New York 12233

Langdon Marsh
Commissioner

October 7, 1994

Mr. Randall Battaglia
Environmental Coordinator
Seneca Army Depot
Romulus, NY 14541

RE: Seneca Army Depot Activity ID No. 850006

Dear Mr. Battaglia:

The New York State Department of Environmental Conservation (NYSDEC) and the New York State Department of Health (NYSDOH) have reviewed the draft Ash Landfill Immediate Response Work Plan of August 1994 and have the following comments:

1. 2.3. Site Preparation : Poly sheets 6 mil thick proposed to cover the stockpiled soils are liable to rips and tear during handling and wind blowing. We recommend using 12 mil thick poly sheets. This comment also applies to Section 1.4 of Appendix D.

2. 9.12. Weekly Reporting and Appendix F, Section 11.3.2: Please send the weekly project status reports to the NYSDEC and NYSDOH at the following addresses:

   1) Kamal K. Gupta, P.E.
   Division of Hazardous Waste Remediation
   Room 223A
   New York State Department of Environmental Conservation
   50 Wolf Road
   Albany, NY 12233-7010

   2) Mr. Daniel R. Geraghty
   Bureau of Environmental Exposure Investigation, Room 205
   New York State Department of Health
   2 University Place
   Albany, NY 12203-3313

3. List of Contacts: Please add the following names and telephone numbers to the list of contacts.

Kamal K. Gupta, P.E.	NYSDEC	(518) 457-3976
Daniel Geraghty	NYSDOH	(518) 458-6309
Dave Napier	NYSDOH	(716) 423-8071
Brian Dombrowski	Seneca County Dept. of Health	(315) 539-9294

4. Appendix A, Section 3.2: Elevated levels of vinyl chloride have been detected in the soil and groundwater at this site, therefore, vinyl chloride should also be considered as contaminant of concern and a discussion on its chemical hazards should be included.

5. Appendix B Section 4.1, and Figure H-1: The confirmatory soil sample borings are shown five feet outside of the excavation limits. Later on, we were informed by Mr. Peter Coutts, of the IT Corp., that the soil borings are being placed at two feet outside of the excavation limits. Please note that the purpose of the confirmatory soil samples is to ensure removal and treatment of soils above action levels, therefore, all soils up to the confirmatory soil boring locations must be excavated and treated. Please specify this in the text of the work plan.

6. Appendix B, Section 4.2.3: Confirmatory soil samples are proposed to be collected from the bottom of the excavated area at the rate of one for every 2500 cubic yards. This frequency seems to be high. Moreover, the confirmatory samples from the floor should be based on area and not volume.

7. Appendix F, Air Monitoring Plan: (i) This section does not address measures taken to control odors during excavation, treatment and soil handling activities.

   (ii) Appendix F, Section 3.1. The version of the NYSDOH Community Air Monitoring Plan (CAMP) included in this appendix is for non-intrusive activities and is therefore inappropriate for this project. Due to the extensive amount of excavation that will take place during the removal action, a continuous air monitoring plan is necessary to adequately protect the community from exposure to site related compounds. Please replace the CAMP in the report with the continuous sampling version attached to this letter.

   (iii) Air monitoring stations must be placed in such a manner as to intercept any possible emissions leaving the work area. The number and placement of air monitoring stations must be sufficient to allow for shifts in wind direction. A final air monitoring plan which shows intended locations and numbers of monitoring stations must be submitted for our review before intrusive remedial work begins. The plan must also include provisions for dealing with changes in wind direction.

   (iv) We strongly recommend the development of a decision flow diagram to assist field personnel in making decisions regarding the air monitoring plan. This diagram should include individual action levels for volatile organic compounds (VOCs) and particulates, and specific responses that should be followed for protection of the community. Such a diagram will help avoid confusion and will ensure a rapid response to any air emissions from the work site.

8. Please provide figure 4 and Appendix G, which are missing, for our review.

If you have any questions, please call me at (518) 457-3976.

Sincerely,

Kamal Gupta

Kamal Gupta, P.E.
Bureau of Eastern Remedial Action
Division of Hazardous Waste Remediation

cc: A. Winslow, USACE, Omaha Dist.
D. Wehner, IT Corp.
K. Healy, USACE, Huntsville Div.
C. Struble, USEPA-Region II
D. Geraghty, NYSDOH

INTERNATIONAL TECHNOLOGY CORPORATION

Memorandum

To: Greg Hoover, USACE
Robert Rushing, IT Corporation

Date: October 13, 1994 1120 HRS.

From: Pete Coutts PWC

Subject: SENECA ASH LANDFILL REMEDIATION EXCAVATION PLAN

I spoke with Robert Scott from the NYSDEC Region VIII today regarding the 75' x 75' excavation cell area limitations, and requested that IT Corporation be permitted to expand the open excavation cell area if all applicable NYS requirements were met in the process.

Robert Scott informed me that he would permit IT Corporation to expand the excavation cell area from the original 75' x 75' area. We do however, need to comply with the predetermined air emission action levels of 150 $\mu g/m^3$ for particulate matter and 5 ppm for VOCs during excavation operations.

9C:\docs\coutts\senecamemo.013

INTERNATIONAL TECHNOLOGY CORPORATION

TRANSMITTAL LETTER

IT Corporation
140 Allens Creek Road
Suite 150
Rochester, New York 14618
(716) 271-6430

October 21, 1994

Dear Sirs:

Please find enclosed the final version of the Baseline Monitoring Report. This document is submitted for the Ash Landfill Removal Action- Phase 1 project at the Seneca Army Depot, Romulus, New York under Contract No. DACW45-90-D-0002, Delivery Order No. 93. The Baseline Monitoring Report presents the results of the baseline monitoring program, including collection of on-site meteorological data, ambient, results of background sampling for VOCs, SVOCs, and particulate matter, and provides general comments based on observations from the baseline program.

Questions concerning this document can be addressed to Mr. Peter Coutts or Mr. Jeffrey Korb of IT Corporation at (716) 271-6430.

Respectfully,

IT CORPORATION

Jeffrey Korb
Air Technical Manager

for

Peter Coutts
Project Technical Manager

JK:PC:jk
Encl.

INTERNATIONAL TECHNOLOGY CORPORATION

Memorandum

To: Greg Hoover, USACE
Robert Rushing, IT Corporation

Date: November 1, 1994

From: Peter Coutts, IT Corporation

Subject: ASH LANDFILL CONFIRMATORY SOIL SAMPLING

I spoke with Kamal Gupta (NYSDEC) today regarding the confirmatory soil samples which are to be taken from the floor of each excavation cell grid area.

We agreed that it would not be necessary to take the sample from the excavation cell floor if we had reached "semi-competent" shale. I explained to him that the shale is fissile and fractures easily but that we would excavate until "semi-competent" bedrock was encountered. We would then proceed to clean the excavated cell floor with the D-3 dozer to remove the bulk of remaining loose fractured shale. No confirmatory sampling would be required at this point.

9C:\docs\coutts\memo.N01

INTERNATIONAL TECHNOLOGY CORPORATION

Memorandum

To: Greg Hoover, USACE
Robert Rushing, IT Corporation

Date: November 2, 1994

From: Peter Coutts, IT Corporation

Subject: ASH LANDFILL REMEDIATION - STORMWATER MANAGEMENT

I spoke with Kamal Gupta (NYSDEC) today regarding alternatives for the management of approximately 70,000 gal. of stormwater that has been containerized and remains on site at this time.

I explained that IT had actively managed all precipitation within the excavation zone resulting in the accumulation of approximately 70,000 gal. of stormwater, bringing us to a near capacity situation. I requested approval to discharge the containerized water prior to on-site treatment, as we were still waiting for his approval on our wastewater discharge permit.

At this time he informed me that he would allow us to discharge the untreated water if we met discharge requirements as outlined in our approved permit. He would fax the discharge requirements to us today or early tomorrow.

9C:\docs\coutts\memo.N02

INTERNATIONAL TECHNOLOGY CORPORATION

November 7, 1994

Mr. Kamal Gupta P.E.
Division of Hazardous Waste Remediation
Room 223 A
New York State Department of Environmental Conservation
50 Wolf Road
Albany, New York 12233-7010

Request for Authorization to Discharge Treated Water - Addendum

Dear Mr. Gupta:

In addition to our September 12, 1994 request for authorization to discharge treated water as part of the U.S. Army Corps of Engineers (USACE) Rapid Response remedial action at the Seneca Army Depot in Romulus, New York, IT Corporation is providing this addendum which describes provisions for the treatment and handling of wastewater containing inorganic constituents.

Containerized wastewater will be treated in the following manner. Wastewaters will be collected in four (4) storage/settling tanks. The water will subsequently pass through a 25 micron particle filter prior to entering the air stripper unit. The treated water will then pass through a 5 micron particle filter prior to being staged into two (2) 20,000 gallon effluent storage tanks. The treatment system will be operated in batch fashion, with batch treatment being performed for approximately every 40,000 gallons of wastewater collected.

Treated water will be analyzed for the chemicals of concern (COCs) as previously outlined in IT Corporation's September 12, 1994 submittal in addition to the newly listed inorganic constituents outlined in Table 1. IT Corporation will also analyze wastewaters for hexavalent chromium and cyanide as required by the City of Geneva Public Owned Treatment Works (POTW) located in Geneva, New York.

Acceptable results will allow discharge to the existing drainage swale. If analytical results fail to meet on-site discharge criteria, the water will either be re-treated and re-analyzed or sent directly to the City of Geneva POTW for disposition. The Geneva POTW's acceptance criteria is included as Attachment A. IT Corporation will contract a qualified wastewater hauler to transport wastewaters from the Seneca Army Depot to the City of Geneva POTW.

IT Corporation will supply the City of Geneva POTW with initial analytical results for the

Regional Office
140 Allen's Creek Road • Suite 150 • Rochester, New York 14618 • 716-271-6430

IT Corporation is a wholly owned subsidiary of International Technology Corporation

treated wastewater prior to their acceptance of the water for disposition.

Upon receipt of initial wastewater analytical results, the City of Geneva will present IT Corporation with a letter of acceptance which will be provided to the NYSDEC.

If you have any questions regarding the above please do not hesitate to call me at (716) 271-6430.

Sincerely,

IT CORPORATION

Peter W. Coutts
Technical Manager

Paul Miciuke /FOR
Grant Cushing
General Manager

Table 1
Seneca Army Depot
Ash Landfill, Phase II
Wastewater Discharge Requirements
Metals

Metal	Max. Conc. (ppb)	Drinking Water Std. (ppb)	Groundwater Std. (ppb)	Surface Water Std. Class D (ppb)
Antimony	191	NA	3	NA
Arsenic	8.6	50	50	360
Barium	1600	2000	1000	NA
Beryllium	11.7	NA	3	NA
Cadmium	64.6	5	10	13.5
Chromium	418	10	50	4270
Cobalt	201	NA	5	NA
Copper	412	1300	200	50
Iron	610,000	300	300	300
Lead	147	15	250	332
Magnesium	267,000	NA	35,000	NA
Manganese	11,400	300	300	NA
Mercury	2.3	2	2	0.2
Nickel	622	NA	NA	4251
Selenium	3.4	10	10	NA
Silver	7.2	50	50	?
Sodium	2,180,000	NA	20,000	NA
Vanadium	358	NA	NA	190
Zinc	1750	5000	300	800

NA = Not Applicable
PPB = parts per billion

Substance	Concentration Limit (mg/l)
arsenic	0.1
cadmium	0.2
chromium (hexavalent)	0.1
chromium (total)	1.0
copper	1.0
iron	10.0
lead	0.1
mercury	0.01
nickel	2.0
selenium	0.05
silver	0.1
zinc	0.6
cyanide - complex	0.8
oil & grease	100.0
sulfide	3.0
phenolic compounds	5.0

§ 46.73 Special conditions

No person shall discharge or permit the discharge or infiltration into the City sewer system of wastes containing the following pollutants in excess of the listed concentrations unless prior approval is granted by the Director:

a. Wastes containing more than 400 mg/l of five day biochemical oxygen demand.

b. Wastes containing more than 350 mg/l of total suspended solids.

c. Wastes containing more than 160 mg/l of total organic carbon.

d. Wastes containing more than 500 mg/l of chemical oxygen demand.

e. Wastewater in volumes constituting greater than 5% of the mean flow influent to the City's POTW treatment plant.

Allowable increases of the pollutant concentrations in (a) through (e) preceding may be subject to a surcharge due to extra strength wastes, as contained in § 46.101 of this ordinance.

INTERNATIONAL TECHNOLOGY CORPORATION

Memorandum

To: Greg Hoover, USACE
Denzie White, USACE
Robert Rushing, IT Corporation

Date: November 14, 1994

From: Pete Coutts, IT Corporation PWC

Subject: ASH LANDFILL REMEDIATION - BACKFILL OPERATIONS

I informed Mr. Kamal Gupta (NYSDEC) that IT Corporation would like to begin backfilling Grids 1 and 2 within Area B with treated soil at this time. I explained that we had removed approximately 18" to 24" of shale bedrock from the entire excavation floor of Grids 1 and 2 within Area B and had reached competent rock at this point. I also informed him that we had documented the limits of the excavation area with photographs. He informed me that we could backfill Grids 1 and 2 if we had received analytical results for the treated backfill material.

I told Kamal that we would follow this same procedure when backfilling other grid areas throughout the duration of the project.

12C:\docs\coutmemo.N14

INTERNATIONAL TECHNOLOGY CORPORATION

Memorandum

To: Greg Hoover USACE
Denzie White USACE
Robert Rushing IT CORP

Date: 11-25-94

From:
Pete Coutts

Subject: Ash Landfill Remediation / Post-treated Soil Piles

I spoke with Kamal Gupta (NYSDEC) regarding covering the treated soil piles with 6 mil poly. I explained that it was not feasible nor necessary from both operational and technical stand points. The material would be treated therefore volatilization from uncovered piles was not a concern. The treated piles are also backfilled immediately after the receipt of analytical results, therefore it is operationally prohibitive to stage / cover and backfill on a continuous basis. I also explained that IT Corp would wet the treated piles to provide sufficient dust control.

Thank You,

Pete W. Coutts

Pete Coutts

XC: Jobfile 519200

INTERNATIONAL TECHNOLOGY CORPORATION

Mr. Kamal Gupta P.E.
Division of Hazardous Waste Remediation
Room 223 A
New York State Department of Environmental Conservation
50 Wolf Road
Albany, New York 12233-7010

November 28, 1994

Request for Authorization to Discharge Treated Water-Addendum II

Dear Mr. Gupta:

IT Corporation (IT) has reviewed the treated water effluent limitations and monitoring reqiurements as outlined in your November 18, 1994 letter to Mr. Randall Battaglia, Environmental Coordinator, Seneca Army Depot.

Previously, IT submitted an application which stated that treated water would be discharged directly to the existing on-site drainage swale which is a tributary to Kendaia Creek, and that surface water effluent standards would be considered as one of the requirements for discharge.

At this time, IT is requesting approval for discharge to groundwater with the provision that promulgated Class GA Groundwater Effluent Standards (NYCRR section 703.6) be met prior to discharge of treated water. IT is also requesting a variance for iron based on elevated concentrations of iron detected in background samples of groundwater. Table 1 presents the iron concentrations detected in groundwater samples from background overburden monitoring wells. In addition, IT requests that only samples of the treated water or effluent stream be required prior to batch discharge, given that treated values, not pretreated values govern whether discharge criteria have been met.

IT proposes to modify the existing treatment system by changing the particulate filter sizing from 25 and 5 micron filters to 5 and 1 micron filters respectively, in an effort to further reduce iron concentrations in the treated water prior to discharge.

IT will discharge treated water to a topographically low area situated within a field northeast of the water treatment unit. If necessary, IT will berm this area to allow for infiltration of the treated water to the local unconfined groundwater system. In the event that percolation rates are insufficient, IT will enhance percolation by constructing shallow trenches in the discharge area.

If you have any questions regarding this request please do not hesitate to call me at (716) 271-6403.

Sincerely,

Peter W. Coutts

IT CORPORATION
Peter W. Coutts
Technical Manager

Grant Cushing
General Manager

SUMMARY OF COMPOUNDS DETECTED-GROUNDWATER BACKGROUND WELLS SENECA ARMY DEPOT ASH LANDFILL

	MCL (µg/l)	DWQS (µg/l)	NYSDEC CLASS GA AWQS (µg/l)	RANGE	MEAN	PHASE I MW-34 01/10/92 MW-34	PHASE I MW-34 01/10/92 PT-1(1)	PHASE II MW-34 06/24/93 MW-34	PHASE I MW-37 01/10/92 MW-37	PHASE II MW-37 06/24/93 MW-37
Metals (µg/l)										
Aluminum	-	-	-	ND -19100	7,110.00	8250 J	7310 J	253	19100	637
Antimony	6	-	3	ND	53.44	55.9 U J	55.9 U J	49.8 UJ	55.9 U J	49.7 UJ
Arsenic	50	50	50	ND	2.66	3.5 U	3.5 U	1.4 UJ	3.5 U	1.4 UJ
Barium	2000	2000	1000	ND-329	181.42	225	191 J	82.5 J	329	79.6 J
Beryllium	4	-	3	ND	0.90			0.9 U		0.89 U
Cadmium	5	5	10	ND	2.86	2.9 U	2.9 U	2.8 U	2.9 U	2.8 U
Calcium	-	-	-	39200-352000	227,200.00	4E+05 J	3E+05 J	1E+05	3E+05 J	1E+05
Chromium	100	10	50	ND-29.8	11.50	10.3	12	2.7 UJ	29.8	2.7 UJ
Cobalt	-	-	5	ND-28	15.80	20 U	20 U	5.5 U	28 J	5.5 U
Copper	1300*	1300	200	ND-25.3	12.96	14.5 U	14.9 J	4.7 U	25.3	5.4 J
Iron	-	300	300	ND-27800	10,235.00	10600 J	11300 J	395	27800	1080
Lead	15*	15	250	ND-8.2	5.04	8.2	7.4	0.79 U	8	0.8 U
Magnesium	-	-	35000	14700-39600	24,100.00	32100	26300 J	17400	28600	16100
Manganese	-	300	300	43.7-2200	1,266.80	2200	1680 J	135	2190	129
Mercury	2	2	2	ND	0.09			0.09 UJ		0.09 UJ
Nickel	100	-	-	ND-36.9	17.48	17.6 J	18 J	7.5 UJ	36.9 J	7.4 UJ
Potassium	-	-	-	1160-11200	5,114.00	8910	9760	1270 J	4470 J	1160 J
Selenium	50	10	10	ND	1.00	1 U	1 U	0.99 UJ	1 U	1 UJ
Silver	-	50	50	ND	7.66	9.1 U	9.1 U	5.5 U	9.1 U	5.5 U
Sodium	-	-	20000	11200-91000	21,300.00	24900 J	36500 J	18200	11900 J	15000
Vanadium	-	-	-	ND	21.04	30.5 U	30.5 U	6.8 UJ	30.6 U	6.8 UJ
Zinc	-	5000	300	ND-58.8	55.35	51.9			58.8	
Cyanide	200	-	100	ND-11.2	10.00	10 U J	10 U J	10 UJ	10 U J	10 UJ
Turbidity						NA	NA	24.2	NA	93

Table I
Background Iron Concentrations - Groundwater

Well Number	Well Type (T/WS = Till Weathered Shale; S = Shale) (ft)	Depth of Well relative to ground surface (ft)	Phase I Turbidity (NTUs)	Phase II Turbidity (NTUs)	Phase I Fe Concentrations (PPb)	Phase II Fe Concentrations (PPb)
PT-10 (1)	S	42.5	NA	10.4	109	85.6 J
MW-34	T/WS	16.2	NA	24.2	10600 J	395
MW-37	T/WS	11.7	NA	93	27800	1080

Note:

1. Background monitoring well PT-10 monitors the underlying shale and is not representative of background Fe concentrations within the overburdern till.

INTERNATIONAL TECHNOLOGY CORPORATION

December 1, 1994

Mr. Frank Ricotta P.E.
Regional Water Engineer
New York State Department of Environmental Conservation
6274 East Avon-Lima Road
Avon, New York 14414

Request For Authorization to Discharge Treated Water-Addendum III

Dear Mr. Ricotta:

IT Corporation (IT) is requesting authorization to discharge treated water as part of the U.S. Army Corps of Engineers (USACE) Rapid Response remedial action at the Seneca Army Depot in Romulus, New York. IT Corporation is providing this addendum which describes provisions for the treatment and handling of water containing inorganic constituents.

Containerized water will be treated in the following manner. Water generated from surface/storm water management and excavation dewatering operations will be collected in four (4) 20,000 gallon storage/settling tanks. The water will subsequently pass through a 5 micron particulate filter prior to entering the air stripper unit. The treated water will then pass through a 1 micron particulate filter prior to being staged into two (2) 20,000 gallon effluent storage tanks. The treatment system will be operated in batch fashion, with batch treatment being performed for approximately every 40,000 gallons of water collected.

Treated water will be analyzed for volatile organic compounds (Method 601/602), semivolatile organic compounds (Method 625), total metals (Method 6010/7000) and total cyanide. Analytical results received for the first 40,000 gallons of treated water meet promulgated Class GA Groundwater Effluent Standards (NYCRR section 703.6) for all constituents monitored with the exception of iron. Iron concentrations for the treated water exceeded the Class GA Groundwater Effluent criteria with a reported value of 9.1 ppm. For this reason IT is requesting approval to transport and dispose of treated water at the Seneca Army Depot (SEDA) POTW for the duration of the Ash Landfill remedial action.

Attached is a copy of a loading analysis for the SEDA POTW performed by Mr. Thomas Enroth, Environmental Engineer, Seneca Army Depot. Also attached is a copy of the SEDA SPDES Permit NY-0021296.

If you have any questions regarding the above, please contact the undersigned at (607) 869-1680.

Sincerely,

Peter W. Coutts

IT Corporation
Peter W. Coutts
Technical Manager

Grant Cushing
General Manager

Attachment

SDSTO-SEI-FE

MEMORANDUM FOR IT CORPORATION

SUBJECT: POTW, SEWAGE TREATMENT PLANT 4

1. Attached is a photocopy of SEDA's SPDES PERMIT NY- 0021296

2. For the preceding 12 months, the average flow rate and loadings are as follows:

a. flow rate: 0.234 MGD (average flow for last 6 months is 0.152 MGD, spring thaw/infiltration exceeds monthly permit requirements thus increases the yearly average)

b. TSS: 94% removal

c. BOD: 85% removal

3. Loading rate calculation to convert mg/l to lbs/day is:

concentration(mg/l) · flow(MGD) · 8.334 = loading(lbs/day)

4. Sewage sludge is currently disposed of by transporting to an approved landfill after analysis and therefore should not be effected by the addition of wastewater that tested above drinking water secondary standards for iron.

5. The rate of discharge to the plant will need to be determined on a case by case basis so not to exceed the daily permit limitations.

6. If you have any questions contact the undersigned.

Thomas Enroth
Environmental Engineer

Final EFFLUENT LIMITATIONS AND MONITORING REQUIREMENTS 001A (Bldg. 4 STP)

During the Period Beginning 5/1/89

and lasting until 5/1/94

the discharges from the permitted facility shall be limited and monitored by the permittee as specified below:

TABLE 1

Outfall Number	Effluent Limitations (Maximum Limits except where otherwise indicated)				
001A	(X) Flow	30 day arithmetic mean	0.250	(X)MGD ( )GPD	
	(X) BOD_5	30 day arithmetic mean	30 mg/l and	62.5 lbs/day(*1)	
	(X) BOD_5	7 day arithmetic mean	45 mg/l and	93.8 lbs/day	
	( ) BOD_5	Daily	____ mg/l and	____ lbs/day	
	( ) UOD (*2)	Daily	____ mg/l and	____ lbs/day	
	(X) Suspended Solids	30 day arithmetic mean	30 mg/l and	62.5 lbs/day(*1)	
	(X) Suspended Solids	7 day arithmetic mean	45 mg/l and	93.8 lbs/day	
	( ) Suspended Solids	Daily	____ mg/l and	____ lbs/day	

( ) Effluent disinfection required: ( ) all year

( ) Seasonal from _____ to _____

( ) Fecal Coliform 30 day geometric mean shall not exceed 200/100 ml

( ) Fecal Coliform 7 day geometric mean shall not exceed 400/100 ml

( ) Fecal Coliform 6 hour geometric mean shall not exceed 800/100 ml (*3)

( ) Fecal Coliform No individual sample may exceed 2400/100 ml (*3)

If chlorine is used for disinfection, a chlorine residual of _____ mg/l shall be maintained in the chlorine contact chamber whenever disinfection is required. If specified here, the chlorine residual in the final discharge shall not exceed _____ mg/l.

( )	Total Coliform	Daily		____/100 ml
( )	Total Kjeldahl Nitrogen	Daily		____/mg/l as N
( )	Ammonia	Daily		____/mg/l as NH_3
( )	Dissolved Oxygen	Minimum		greater than ____ mg/l
(X)	pH	Range		6.0 to 9.0
(X)	Settleable Solids	Daily	less than	0.3 ml/l
( )	Phosphorus	Daily		____ mg/l as P
( )	Total Nitrogen	Daily		____ mg/l as N
( )	_____			

CONTINUED OF REVERSE SIDE

Final EFFLUENT LIMITATIONS AND MONITORING REQUIREMENTS 001B (Bldg. 4 STP Effluent from Wetlands Treatment)

During the Period Beginning 5/1/89

and lasting until 5/1/94

the discharges from the permitted facility shall be limited and monitored by the permittee as specified below:

Outfall Number		TABLE 1 Effluent Limitations (Maximum Limits except where otherwise indicated)			
001B	( )	Flow	30 day arithmetic mean	_____ ( )MGD ( )GPD	
	( )	BOD_5	30 day arithmetic mean	_____mg/l and	_____lbs/day(*1)
	( )	BOD_5	7 day arithmetic mean	_____mg/l and	_____lbs/day
	( )	BOD_5	Daily	_____mg/l and	_____lbs/day
	( )	UOD (*2)	Daily	_____mg/l and	_____lbs/day
	( )	Suspended Solids	30 day arithmetic mean	_____mg/l and	_____lbs/day(*1)
	( )	Suspended Solids	7 day arithmetic mean	_____mg/l and	_____lbs/day
	( )	Suspended Solids	Daily	_____mg/l and	_____lbs/day
	( )	Effluent disinfection required: ( ) all year			
		( ) Seasonal from _____ to _____			
	( )	Fecal Coliform	30 day geometric mean shall not exceed 200/100 ml		
	( )	Fecal Coliform	7 day geometric mean shall not exceed 400/100 ml		
	( )	Fecal Coliform	6 hour geometric mean shall not exceed 800/100 ml (*3)		
	( )	Fecal Coliform	No individual sample may exceed 2400/100 ml (*3)		
		If chlorine is used for disinfection, a chlorine residual of _____ mg/l shall be maintained in the chlorine contact chamber whenever disinfection is required. If specified here, the chlorine residual in the final discharge shall not exceed _____ mg/l.			
	( )	Total Coliform	Daily	_____/100 ml	
	( )	Total Kjeldahl Nitrogen	Daily	_____/mg/l as N	
	( )	Ammonia	Daily	_____/mg/l as NH_3	
	( )	Dissolved Oxygen	Minimum	greater than _____mg/l	
	( )	pH	Range	_____ to _____	
	( )	Settleable Solids	Daily	_____ml/l	
	( )	Phosphorus	Daily	_____mg/l as P	
	( )	Total Nitrogen	Daily	_____mg/l as N	
	( )	_____			

CONTINUED OF REVERSE SIDE

TABLE 2

Monitoring Requirements

	Parameter	Frequency	Sample Type	Sample Location: Influent	Sample Location: Effluent
☒	Total Flow, MGD	Continuous	N/A		X
☒	BOD_5, mg/l	1/month	6 hr.comp.		X
☒	Suspended Solids, mg/l	1/month	6 hr.comp.		X
☐	Fecal Coliform, No./100 ml				
☐	Total Coliform, No./100 ml				
☐	Total Kjeldahl Nitrogen, mg/l as N				
☒	Ammonia, mg/l as NH_3	1/month	6 hr.comp.		X
☐	Dissolved Oxygen, mg/l				
☒	pH	1/month	grab		X
☐	Settleable Solids, ml/l				
☐	Residual Chlorine, mg/l				(*4)
☐	Phosphorus, mg/l as P				
☐	Temperature, °C				
☐	Total Nitrogen, mg/l as N				
☐	Visual Observation				
☐	_____				

NOTE: (*1) and effluent values shall not exceed _____% of influent values.
(*2) (Ultimate Oxygen Demand) shall be computed and reported as follows:
UOD = 1 1/2 x $CBOD_5$ + 4 1/2 x TKN (Total Kjeldahl Nitrogen).
(*3) applicable only in the Interstate Sanitation District.
(*4) sample contact chamber effluent and final effluent if limits are specified for both.

TABLE 2

Monitoring Requirements

	Parameter	Frequency	Sample Type	Sample Location: Influent	Sample Location: Effluent
☒	Total Flow, MGD	Continuous	N/A	X	X
☒	BOD_5, mg/l	1/mo.	6 hr.comp.	X	X
☒	Suspended Solids, mg/l	1/mo.	6 hr.comp.	X	X
☐	Fecal Coliform, No./100 ml				
☐	Total Coliform, No./100 ml				
☐	Total Kjeldahl Nitrogen, mg/l as N				
☐	Ammonia, mg/l as NH_3				
☐	Dissolved Oxygen, mg/l				
☒	pH	daily	grab	X	X
☒	Settleable Solids, ml/l	daily	grab	X	X
☐	Residual Chlorine, mg/l				(*4)
☐	Phosphorus, mg/l as P				
☒	Temperature, °C	daily	grab	X	X
☐	Total Nitrogen, mg/l as N				
☐	Visual Observation				
☐					

NOTE: (*1) and effluent values shall not exceed 15 % of influent values.
(*2) (Ultimate Oxygen Demand) shall be computed and reported as follows:
UOD = 1 1/2 x $CBOD_5$ + 4 1/2 x TKN (Total Kjeldahl Nitrogen).
(*3) applicable only in the Interstate Sanitation District.
(*4) sample contact chamber effluent and final effluent if limits are specified for both.

INTERNATIONAL TECHNOLOGY CORPORATION

Memorandum

To: Robert Rushing, IT Corp.
Greg Hoover, USACE
Denzie White, USACE

Date: December 5, 1994

From: Jeff Korb, IT Corp.

Subject: Technical Manager- Air

SEDA Perimeter Air Monitoring Program-Volatile Organic Compound (VOC) and Particulate Matter Real-Time Monitoring

Perimeter monitoring stations at the SEDA Ash Landfill project have been collecting real-time samples of VOCs and particulate matter, in addition to monitoring via U.S. EPA reference method for PM_{10} and TSP for lead, since the initiation of on-site activities. Problems associated with start-up, instrument sensitivity to ambient conditions, and inclement weather have interrupted real-time monitoring at the perimeter stations on several occasions. This memorandum is intended to address the real-time monitoring instruments and their operational problems, primarily by offering suggestions on several options in order to resolve these problems.

VOC Instrumentation

The photoionization detectors (PIDs), the Mini-RAEs, originally used on the project had several instances of operational failure in the field. When conditions were such, these instruments failed to measure VOC concentrations in high humidity and low temperature environments, were limited in their durability and effectiveness in atmospheres where dust loading was a problem, and, in some cases, completely shut down when heavy precipitation occurred at the project site. These problems are not unique to these instruments but are indicative of PIDs in general and are not limited to just this make or model.

Because of these problems, IT has changed the PID instruments used at the perimeter monitoring stations. We are now operating HNu DL-101 PIDs. These instruments, while subject to the identical limitations as the mini-RAE PIDs, have shown in our experience to be more sturdy and durable in their operation. At this time, IT believes these instruments will be usable for the remainder of the air monitoring program.

Since the trial perimeter monitoring period agreed to by the USACE and IT at the start of

the project is nearing completion, this may be a good time to examine possible options available to us concerning the perimeter monitoring. For VOC monitoring, the results of the Baseline Monitoring task, and the preliminary results of the Prove-Out event stack sampling and project VOC monitoring appear to demonstrate that VOC release and dispersion from project activities is at very low levels to nonexistent and does not represent a significant concern for either project personnel or off-site receptors. Based on these results, it may be an effective argument to discontinue VOC monitoring at the perimeter stations.

Another option would be to perform the VOC sampling at the perimeter monitoring stations using U.S. EPA Compendium Method TO-14, in which SUMMA®-passivated canisters collect the ambient samples. This option will allow us to plan for possible contingencies caused by the weather during the months of December, January, and/or February. Either the HNu PIDs or the TO-14 canisters will be able to collect ambient VOC samples at the perimeter of the project site. The advantages and disadvantages of the two options are summarized below:

PIDs
Advantages

- The PIDs are real-time instruments able to record and datalog VOC concentrations
- The PIDs are relatively cheap at +/-$ 300.00 per week estimated per instrument
- The PID should operate in low temperature environments

Disadvantages

- The PIDs will remain susceptible to extreme weather conditions, high humidity conditions created from the burner stack exhaust, and high dust concentrations.
- The PIDs are limited by their battery charge duration in cold temperatures; thus, additional instruments will need to be available to be rotated at the stations more frequently than current conditions. Additional instruments will result in additional costs to the Ash Landfill program and might unnecessarily complicate preventative maintenance initiatives.

TO-14
Advantages

- TO-14 sampling is easy to implement and is not typically hampered by environmental problems such as the low temperatures, precipitation, or dust levels that the PIDs experience. Samples can be collected in inclement weather without concern for failure of sampling equipment.

- The collection of VOC samples can be accomplished over eight, 12, or 24-hour periods with a limit of thirty days: this set-up can be coordinated with the PM_{10} and TSP 30-day sampling period currently underway. Like the strategy with the PM_{10} and TSP monitoring, TO-14 data can provide good technical information on the transport and dispersion of VOCs resulting from project activities during these winter months. It is expected that VOCs will not be dispersed widely during the upcoming winter months, so the limited program can be beneficial and more cost-effective an approach.

- Method TO-14 will provide better data quality and greater accuracy than the PIDs.

Disadvantages

- Method TO-14 sampling will be a greater expense to the project because of the charge to analyze the canisters. Depending on analytical turnaround time(TAT) requirements, the Method TO-14 will cost approximately per canister:

  1) 3 day TAT- $ 570.00
  2) 5 day TAT- $ 410.00
  3) 15 day TAT- $ 325.00

The major concern with implementing the Method TO-14 sampling will be the cost over the duration of the project. The cost of the sample collection and subsequent analysis will be more expensive than the PID operation: however, to begin the TO-14 monitoring under conditions such as those agreed upon for the PM_{10} and TSP monitoring may be the best approach. TO-14 sampling over a thirty day period on a 24-hour basis will provide a good base of data for evaluating VOC dispersion. Additional consideration can also be given by the fact that the ambient weather conditions occurring in this part of the country typically are not conducive to VOC dispersion. By limiting the sampling set-up to thirty days and then re-evaluating the TO-14 monitoring, costs can be controlled and the perimeter VOC monitoring may be able to be discontinued.

Particulate Matter Instrumentation

As briefly mentioned above, the trial monitoring period for the PM_{10} and TSP sampling will be completed soon. Once the data is collected and validated, we will have a dataset that will be able to assist us in the determination as whether or not to continue this type of monitoring. Options include the possibility of discontinuing the sampling or maintaining our current level of monitoring. In addition, the real-time monitoring may also need to be re-examined.

More specifically to the point at hand, the Mini-RAMs, the aerosol and dust monitors currently in use on the project are still operational at the perimeter stations. Concern over

the durability and stability of the instruments for the cold winter months has become apparent, as the mini-RAMs have demonstrated some operational difficulty. In a few instances, these instruments were not able to accurately measure ambient dust levels in high humidity and low temperature environments caused by the steam generated from the thermal treatment unit and failed to operate properly when inclement weather occurred at the project site. These problems are the result of design flaws in the instrument and limitations on its use in extreme conditions.

A possible solution to the mini-RAMs operational difficulties is to upgrade to the larger and sturdier RAM models made by the same vendor. These models can be outfitted with omni-directional sampling trains to allow the instrument to be sheltered and protected from the elements. In addition, this model has a heating system available to further extend its operating capabilities during the winter months. Both of these features should be considered requisite for this project.

One consideration with replacing in-kind the mini-RAMs with the RAMs is cost. The RAM model is slightly more expensive to have on site than the mini-RAMs. The advantage of maintaining a real-time dust monitoring presence is worth this cost in my opinion. I feel the greater potential for air contaminant dispersion from the project site lies with particulate matter. The RAM measurement data, like the mini-RAM, can and will be compared to PM_{10} and TSP data for representativeness and comparability at the end of the trial monitoring period.

Recommendations

As can be seen in the information above, if the decision to continue VOC monitoring is made, implementing the Method TO-14 sampling will greatly ease the collection of samples at the perimeter stations by eliminating the effects of inclement weather or unsuitable environment on so-so reliable instrumentation. In addition, short-term use of the Method will provide better and more reliable results upon which to base the decision to discontinue VOC perimeter monitoring.

Trading the mini-RAMs out for the RAMs will help the collection of dust levels at the perimeter during the winter months and maintain the important real-time monitoring capability for dusts and particulate matter, with particulate essentially being of the most concern during the months of December, January, and/or February in New York State. Not mentioned above, but an added benefit to using the RAM model is that it is compatible with the visual alarm system installed at the perimeter stations.

IT anticipates having all necessary data from the perimeter monitoring collected and validated in the near future. This data will be presented in a report providing a summary and analysis of perimeter monitoring and meteorological activities at the site from the initiation of the project to the present. This report will satisfy reporting requirements included as part of the project Air Monitoring Plan (AMP). Upon submission, I think we will be able to make these important decisions and present them to the NYS regulators.

If you have any questions or require additional information, please feel free to contact me, either at the Ash Landfill site or in the IT Rochester office. The phone number is (716) 271-6430.

Community Air Monitoring Plan

Real-time air monitoring, for volatile compounds and particulate levels at the perimeter of the work area is necessary. The plan must include the following:

- Volatile organic compounds must be monitored at the downwind perimeter of the work area daily at 2 hour intervals. If total organic vapor levels exceed 5 ppm above background, work activities must be halted and monitoring continued under the provisions of a Vapor Emission Response Plan. All readings must be recorded and be available for State (DEC & DOH) personnel to review.
- Particulates should be continuously monitored upwind, downwind and within the work area at temporary particulate monitoring stations. If the downwind particulate level is 150 $\mu g/m^3$ greater than the upwind particulate level, then dust suppression techniques must be employed. All readings must be recorded and be available for State (DEC & DOH) personnel to review.

Vapor Emission Response Plan

If the ambient air concentration of organic vapors exceeds 5 ppm above background at the perimeter of the work area, activities will be halted and monitoring continued. If the organic vapor level decreases below 5 ppm above background, work activities can resume but more frequent intervals of monitoring, as directed by the Safety Officer, must be conducted. If the organic vapor levels are greater than 5 ppm over background but less than 25 ppm over background at the perimeter of the work area, activities can resume provided:

- the organic vapor level 200 ft..downwind of the work area or half the distance to the nearest residential or commercial structure, whichever is less, is below 5 ppm over background, and
- more frequent intervals of monitoring, as directed by the Safety Officer, are conducted.

If the organic vapor level is above 25 ppm at the perimeter of the work area, activities must be shutdown. When work shutdown occurs, downwind air monitoring as directed by the Safety Officer will be implemented to ensure that vapor emission does not impact the nearest residential or commercial structure at levels exceeding those specified in the Major Vapor Emission section.

Major Vapor Emission

If any organic levels greater than 5 ppm over background are identified 200 feet downwind from the work area or half the distance to the nearest residential or commercial property, whichever is less, all work activities must be halted.

If, following the cessation of the work activities, or as the result of an emergency, organic levels persist above 5 ppm above background 200 feet downwind or half the distance to the nearest residential or commercial property from the work area, then the air quality must be monitored within 20 feet of the perimeter of the nearest residential or commercial structure (20 Foot Zone).

If efforts to abate the emission source are unsuccessful and if any of the following levels persist for more than 30 minutes in the 20 Foot Zone, then the Major Vapor Emission Response Plan shall automatically be placed into effect if organic vapor levels are approaching 5 ppm above background.

However, the Major Vapor Emission Response Plan shall be immediately placed into effect if organic vapor levels are greater than 10 ppm above background.

Major Vapor Emission Response Plan

Upon activation, the following activities will be undertaken:

1. All Emergency Response Contacts as listed in the Health and Safety Plan of the Work Plan will go into effect.
2. The local police authorities will immediately be contacted by the Safety Officer and advised of the situation.
3. Frequent air monitoring will be conducted at 30 minutes intervals within the 20 Foot Zone. If two successive readings below action levels are measured, air monitoring may be halted or modified by the Safety Officer.

SENECA ASH LANDFILL
SITE SPECIFIC ADVANCE AGREEMENTS

1. Base to supply 480 Volt, 3 Phase electrical services to the immediate area adjacent to the former incinerator. IT will make hook-ups from that terminating point.

2. Base is responsible for recharging six-inch water line nearby the site. IT will tap into the line and run water to treatment/support areas with 4-inch diameter fire hose.

3. No upfront sampling of excavated soil/debris will be necessary. ESI's previous investigation yielded results which indicate that the excavated soil/debris will require treatment.

4. Brush to be cleared from the areas to be excavated will not itself be contaminated and it can be staged in piles outside of the exclusion zone. As such. costs for treatment or off-site disposal of brush have not been included.

5. The volume of water requiring treatment will not exceed 40,000 gallons collected at any one time. Treatment will not require a flow rate of greater than 25 gallons per minute (gpm).

6. Base will clear brush from the areas to be excavated prior to surveyors arrival on-site.

7. On-site water pretreatment will not have to be performed for metal constituents.

8. Wastewater will not have to be sampled for dioxins and furans. Previous sampling results indicate that neither dioxins or furans are site-specific concerns.

9. Meteorological station will be located on Base property.

10. Offgas emissions from the air stripper (emissions to emanate from a 30-foot high tower) will not be subject to air pollution control.

11. The authorization for discharge of treated water to the on-site drainage swale will be obtained prior to initiation of treatment. Assumption has been made that all appropriate discharge and emission authorizations will be received from the issuing agency in a timely fashion.

12. Costs associated with prove-out problems (weather related, equipment and/or power failure) have not been estimated or included.

13. Contracted laboratory will meet 72-hour turn-around time (TAT) for all wastewater and soil analyses.

INTERNATIONAL TECHNOLOGY CORPORATION

December 6, 1994

Mr. Kamal Gupta P.E.
Division of Hazardous Waste Remediation
Room 223 A
New York State Department of Environmental Conservation
50 Wolf Road
Albany, New York 12233-7010

Landfarming Operations-Response

Dear Mr. Gupta:

IT Corporation (IT) is providing the following response to address concerns raised by yourself regarding the staging and segregating of Area B excavated soils onto Area A. Material excavated from Area B had been stockpiled onto Area A prior to processing through the LTTD unit. The incident in question occurred during the Prove-out (Trial-burn) phase of the project. During LTTD Prove-out, the system must process 1500 tons of material with 500 tons of the material to be processed continuously without system shutdown. During system Prove-out we experienced approximately 5.5 inches of rainfall within a three day period. Saturated stockpiled soils had to be partially segregated from drier material to continue Prove-out operations. The LTTD unit cannot process material that is completely saturated, so drier soils were segregated from saturated soils and subsequently used as Prove-out feed material. Volatilization of organics during soils segregation was not a concern during the rainfall event. IT did conduct real-time perimeter air monitoring for volatiles, and volatile organics were not detected above pre-established action levels during soils segregation.

If you have any questions regarding the above please do not hesitate to contact me at (607) 869-1680.

Sincerely,

IT Corporation

Peter W. Coutts

Peter W. Coutts
Technical Manager

Regional Office
William Penn Plaza • 2790 Mosside Boulevard • Monroeville, Pennsylvania 15146-2792 • 412-372-7701

IT Corporation is a wholly owned subsidiary of International Technology Corporation

December 15, 1994

Mr. Robert Scott
Permit Administrator
New York State
Department of Environmental Conservation
Region 8 Office
6274 East Avon-Lima Road
Avon, New York 14414

Project No. 519200

Transmittal of Results and Impact Analyses from the Prove-Out Event Source Testing- Seneca Army Depot Ash Landfill USACE Rapid Response Project

Dear Mr. Scott:

IT Corporation (IT), on behalf of the U.S. Army Corps of Engineers (USACE), Omaha District and the Seneca Army Depot Activity (SEDA), conducted source emissions testing on a low temperature thermal treatment (LTTD) system during the Prove-Out Event performed as part of the USACE Rapid Response remedial action at the Seneca Army Depot in Romulus, New York. IT has received both verbal and written requests from yourself and Mr. Kamal Gupta of the New York State Department of Environmental Conservation (NYSDEC) office in Albany, New York to forward the results of these tests to your attention when they are available.

Attached are several tables that present a summary of the analytical results for the different types of testing performed during the Prove-Out Event. Table 1 shows the Method 5-particulate matter results and BIF Method 9057 for hydrochloric acid emissions. Table 2 presents the Method TO-14 volatile organics (VOC) results. Table 3 contains the analytical results for the semi-volatile compounds.

As can be seen, the emission rates and associated impact concentrations for the compounds of concern are not significant. Table 4 provides a spreadsheet of the chemical-specific impact analyses performed according to the Standard Point Source Method in NYSDEC Air Guide-1 Appendix B guidelines. All compounds demonstrate impact concentrations below applicable Annual Guideline Concentrations (AGCs) and Short-Term Guideline Concentrations (SGCs). In addition, as a conservative measure, IT has utilized Air Guide-29 protocols. Air Guide-29 is for air strippers, soil vapor extraction units and other remedial measures and applies one half the AGC of benzene as the ambient guideline in which to compare. The results in Table 4 show that all compound impact concentrations were below one half their respective AGC values as well. All measurements and impact predictions suggest that the LTTD system in

operation at the SEDA Ash Landfill meets all substantive requirements of 6NYCRR 201 *et seq*. In the near future, this and other data from the Prove-Out Event will be formally presented in a Prove-Out Report.

We hope this information will serve to meet your needs. If additional information is required, please contact the undersigned at (716) 271-6430.

Respectfully Submitted,

IT CORPORATION

Jeffrey D. Korb
Technical Manager- Air

Peter W. Coutts
Project Technical Manager

JDK:PWC:jk
Attachments

cc: Kamal Gupta- Div. of Hazardous Waste Remediation, NYSDEC, Albany, NY
Andrew Winslow- U.S. Army Corps of Engineers, Omaha District
Randall Battaglia- U.S. Army, Seneca Army Depot
Douglas Wehner- IT Corporation
Robert Rushing- IT Corporation

Table 1
U.S. Army Corps of Engineers Omaha District
Seneca Army Depot, Romulus, New York
Summary Hydrochloric Acid/Particulates Results - Proveout Event

Type	Compound	Date Collected	Sample ID	Results (mg)	Qualifier	Emission Rate (lb/hr)
BIF 9057	HCL	11/2/94				
			S-HCL-1-0306A	22	+	0.82
			S-HCL-2-0308A	6.8	U	NA
			S-HCL-3-0310A	23	+	0.69
			S-HCL-BLANK-0302	1.6	U	-
			S-HCL-BLANK-0303	1.8	U	-
Method 5	Total Particulate	11/2/94				
			S-HCL-1-0305B	157.3		5.87
			S-HCL-2-0307B	92.7		NA
			S-HCL-3-0309B	174.2		5.26

Average Volumetric Gas Flow for Particulate - 10,900 dscfm; 54,300 ACFM
+ - Positive result
U - Compound was analyzed for but not detected. The number is the dectection limit for the sample.
NA - Run Two (S-HCL-2) is void. No emission rate results are available.

Table 2
U.S. Army Corps of Engineers Omaha District
Seneca Army Depot, Romulus, New York
Summary of TO14 Volatile Results - Proveout Event

Type	Date Collected	Sample ID #	Compound(s) Detected	VOC Results in ppb (v/v)	Emission Rate (lb/hr)
VOC	11/2/94	AC8544			
			Toluene	2.1	0.000329
			Benzene	8.7	0.00116
			Chloromethane	3.8	0.000327
VOC	11/3/94	AC8546			
			Chloromethane	1.7	0.000146
VOC	11/3/94	AC8547			
			m/p-Xylene	1.5	0.000251
			Toluene	2.6	0.000377
			Bromomethane	1.5	0.000224
			Chloromethane	5	0.000397
VOC	11/3/94	AC8547DP			
			m/p-Xylene	1.5	0.000251
			Toluene	2.6	0.000377
			Bromomethane	1.5	0.000224
			Chloromethane	5	0.000397
VOC	11/1/94	AC8548			
			Toluene	0.54	
			Methylene Chloride	3	

Table 3
U.S. Army Corps of Engineers Omaha District
Seneca Army Depot, Romulus, New York
Summary of Semi volatile Results - Proveout Event

Type	Date Collected	Sample ID #	Compound(s) Detected	Results (ug)	Qualifier	Emission Rate (lb/hr)
Semivol		SBLKAC95533				
			bis (2-Ethylhexyl) Phthalate	7	J	-
Semivol	11/4/94	SMM51				
			2-Nitrophenol	14	J	0.000498
			Naphthalene	7	J	0.000249
			Diethylphthalate	61		0.00217
			Phenanthrene	5	J	0.000178
			Di-n-Butylphthalate	710	E	0.0345
			bis (2-Ethylhexyl) Phthalate	480	E	0.0203
			Phenol	60		0.00213
Semivol	11/4/94	SMM51DL				
			Di-n-Butylphthalate	970	D	-
			bis (2-Ethylhexyl) Phthalate	570	BD	-
			Diethylphthalate	50	DJ	-
Semivol	11/4/94	SMM52				
			bis (2-Ethylhexyl) Phthalate	230	B	0.0091
			Diethylphthalate	89		0.00352
			Di-n-Butylphthalate	340		0.0135
			Pyrene	8	J	0.000316
			Phenol	150		0.00693
Semivol	11/4/94	SMM53				
			1,2,4-Trichlorobenzene	23	J	0.000769
			Diethylphthalate	57		0.00191
			Anthracene	5	J	0.000167

Key:
U - Compound was analyzed for but not detected; value given is quantification limit.
E - Compound exceeded the calibration range.
D - Compound analyzed at secondary dilution.
J - Compound detected but below quantification limit; value is estimated.
B - Compound found in method blank.

Table 3
U.S. Army Corps of Engineers Omaha District
Seneca Army Depot, Romulus, New York
Summary of Semi volatile Results - Proveout Event

Type	Date Collected	Sample ID #	Compound(s) Detected	Results (ug)	Qualifier	Emission Rate (lb/hr)
			Di-n-Butylphthalate	470		0.0157
			Pyrene	6	J	0.000201
			bis (2-Ethylhexyl) Phthalate	900	BE	0.0301
			2-Nitrophenol	11	J	0.000368
Semivol	11/4/94	SMM53DL				
			Di-n-butylphthalate	470	DJ	-
			bis (2-Ethylhexyl) Phthalate	900	BD	-
Semivol	11/1/94	SMM5BLANK				
			Diethylphthalate	28		-
			Di-n-Butylphthalate	210	E	-
			bis (2-Ethylhexyl) Phthalate	13	B	-
Semivol	11/1/94	SMM5BLANK				
			Diethylphthalate	28	DJ	-
			Di-n-Butylphthalate	340	D	-
			bis (2-Ethylhexyl) Phthalate	11	BDJ	-

Key:
U - Compound was analyzed for but not detected; value given is quantification limit.
E - Compound exceeded the calibration range.
D - Compound analyzed at secondary dilution.
J - Compound detected but below quantification limit; value is estimated.
B - Compound found in method blank.

TABLE 4
SENECA ARMY DEPOT ASH LANDFILL
PROVE-OUT EVENT/ STACK TEST RESULTS[1]

LFTD EMISSIONS WITH CONTROL
IMPACT ANALYSIS

COMPOUNDS	CAS No.	AGC (ug/m3)	SGC (ug/m3)	1/2 AGC	MAX Measured Emissions[2] (lb./hr.)	% Control	Actual Emissions (lbs./hr.)	Actual Emissions (lbs./yr.)	Hs	TEMP (°R)	Radius (ft.)	Velocity (ft./s)	FLUX (m^4/s^3)	He (flux)	He (2.25) FLUX	Ca FLUX (0.4)	Cp FLUX (0.4)	Cst FLUX (0.4)	PASS AGC	PASS 1/2 AGC	PASS SGC
TRICHLOROETHENE (TCE)	79-01-6	0.45	33000	0.23	0.000161	0.99	1.61E-04	1.41E+00	56	1872	1.667	90	50.22	188.06	130967	0.00003	0.00003	0.00168	Y	Y	Y
1,2-DICHLOROETHENE (DCE)	156-59-2	1900	190000	950	0.000119	0.99	1.19E-04	1.04E+00	56	1872	1.667	90	50.22	188.06	130967	0.00002	0.00002	0.00124	Y	Y	Y
VINYL CHLORIDE	75-01-4	0.02	1300	0.01	0.000077	0.99	7.67E-05	6.72E-01	56	1872	1.667	90	50.22	188.06	130967	0.00001	0.00001	0.00080	Y	Y	Y
BENZENE	71-43-2	0.12	30	0.06	0.001160	0.99	1.16E-03	1.02E+01	56	1872	1.667	90	50.22	188.06	130967	0.00019	0.00019	0.01209	Y	Y	Y
TOLUENE	108-88-3	2000	89000	1000	0.000377	0.99	3.77E-04	3.30E+00	56	1872	1.667	90	50.22	188.06	130967	0.00006	0.00006	0.00393	Y	Y	Y
m p XYLENE	1330-20-7	300	100000	150	0.000251	0.99	2.51E-04	2.20E+00	56	1872	1.667	90	50.22	188.06	130967	0.00004	0.00004	0.00262	Y	Y	Y
o XYLENE	95-47-6	700	100000	350	0.000130	0.99	1.30E-04	1.14E+00	56	1872	1.667	90	50.22	188.06	130967	0.00002	0.00002	0.00135	Y	Y	Y
HYDROGEN CHLORIDE	7641-01-0	167	1667	83.50	0.760000	0.99	7.60E-01	6.66E+03	56	1872	1.667	90	50.22	188.06	130967	0.12200	0.12186	7.92106	Y	Y	Y
BROMOMETHANE	74-83-9	452	4524	226	0.000224	0.99	2.24E-04	1.96E+00	56	1872	1.667	90	50.22	188.06	130967	0.00004	0.00004	0.00233	Y	Y	Y
CHLOROMETHANE	74-87-3	770	22000	385	0.000397	0.99	3.97E-04	3.48E+00	56	1872	1.667	90	50.22	188.06	130967	0.00006	0.00006	0.00414	Y	Y	Y
METHYLENE CHLORIDE	75-09-2	27	41000	13.50	0.000160	0.99	1.60E-04	1.40E+00	56	1872	1.667	90	50.22	188.06	130967	0.00003	0.00003	0.00167	Y	Y	Y
bis-(2-ETHYLHEXYL) PHTHALATE	117-81-7	11.90	1190	5.95	0.031000	0.00	3.10E-02	2.72E+02	56	1872	1.667	90	50.22	188.06	130967	0.00498	0.00497	0.32310	Y	Y	Y
2-NITROPHENOL	100-02-7	0.10	---	0.05	0.001980	0.00	1.98E-03	1.73E+01	56	1872	1.667	90	50.22	188.06	130967	0.00032	0.00032	0.02064	Y	Y	Y
NAPHTHALENE	91-20-3	120	12000	60	0.001980	0.00	1.98E-03	1.73E+01	56	1872	1.667	90	50.22	188.06	130967	0.00032	0.00032	0.02064	Y	Y	Y
DIETHYLPHTHALATE	84-66-2	12	1200	6.00	0.003520	0.00	3.52E-03	3.08E+01	56	1872	1.667	90	50.22	188.06	130967	0.00057	0.00056	0.03669	Y	Y	Y
PHENANTHRENE	85-01-8	4.76	476	2.38	0.001980	0.00	1.98E-03	1.73E+01	56	1872	1.667	90	50.22	188.06	130967	0.00032	0.00032	0.02064	Y	Y	Y
DI-n-BUTYL PHTHALATE	87-74-2	120	1190	60	0.034500	0.00	3.45E-02	3.02E+02	56	1872	1.667	90	50.22	188.06	130967	0.00554	0.00553	0.35957	Y	Y	Y
PHENOL	108-95-2	9.60	4500	4.80	0.005930	0.00	5.93E-03	5.19E+01	56	1872	1.667	90	50.22	188.06	130967	0.00095	0.00095	0.06181	Y	Y	Y
PYRENE	129-00-0	4.76	476	2.38	0.001780	0.00	1.78E-03	1.56E+01	56	1872	1.667	90	50.22	188.06	130967	0.00029	0.00029	0.01855	Y	Y	Y
1,2,4-TRICHLOROBENZENE	120-82-1	9.00	3700	4.50	0.001980	0.00	1.98E-03	1.73E+01	56	1872	1.667	90	50.22	188.06	130967	0.00032	0.00032	0.02064	Y	Y	Y
ANTHRACENE	120-12-7	4.76	476	2.38	0.001980	0.00	1.98E-03	1.73E+01	56	1872	1.667	90	50.22	188.06	130967	0.00032	0.00032	0.02064	Y	Y	Y
PARTICULATES	NY75-00-0	80	120	40	5.560000	0.90	5.56E+00	4.87E+01	56	1872	1.667	90	50.22	188.06	130967	0.89254	0.89152	57.94884	Y	Y	Y

[1] - INCLUDES COMPOUNDS ORGINALLY LISTED ON PERMIT APPLICATION AND COMPOUNDS DETECTED DURING PROVE-OUT EVENT
[2] - MAXIMUM EMISSION RATE MEASURED or MAXIMUM CONCENTRATION BASED ON HIGHEST DETECTION LIMIT

AGC = Ambient Guideline Concentration
SGC = Short-Term Guideline Concentration
Ca = Annual Impact concentration
Cp = Potential Annual Impact concentration
Cst = Short-Term Impact concentration
He = Effective stack height

Compounds Detected	Emission Rate (lb/hr)
Phenol	0.00213
2-Nitrophenol	0.000498
Naphthalene	0.000249
Diethylphthalate	0.00217
Phenanthrene	0.000178
Di-n-Butylphthalate	0.0345
bis (2-Ethylhexyl) Phthalate	0.0203
Phenol	0.00693
Diethylphthalate	0.00352
Di-n-Butylphthalate	0.0135
Pyrene	0.000316
bis (2-Ethylhexyl) Phthalate	0.0091
2-Nitrophenol	0.000368
1,2,4-Trichlorobenzene	0.000769
Diethylphthalate	0.00191
Anthracene	0.000167
Di-n-Butylphthalate	0.0157
Pyrene	0.000201
bis (2-Ethylhexyl) Phthalate	0.0301
Chloromethane	0.000327
Benzene	0.00116
Toluene	0.000329
Chloromethane	0.000146
Chloromethane	0.000397
Bromomethane	0.000224
Toluene	0.000377
m/p-Xylene	0.000251

Compounds Detec	Emission Rate (lb/h
1,2,4-Trichloroben	0.000769
2-Nitrophenol	0.000498
Anthracene	0.000167
Benzene	0.00116
bis (2-Ethylhexyl)	0.0301
Bromomethane	0.000224
Chloromethane	0.000397
Di-n-Butylphthalat	0.0345
Diethylphthalate	0.00352
m/p-Xylene	0.000251
Naphthalene	0.000249
Phenanthrene	0.000178
Phenol	0.00693
Pyrene	0.000316
Toluene	0.000377

INTERNATIONAL TECHNOLOGY CORPORATION

TRANSMITTAL LETTER

IT Corporation
140 Allens Creek Road
Suite 150
Rochester, New York 14618
(716) 271-6430

January 16, 1995

Dear Sirs:

Please find enclosed the final version of the Prove-Out Event Report. This document is submitted as part of the Ash Landfill Immediate Response Measure- Phase 2 project at the Seneca Army Depot Activity, Romulus, New York under Contract No. DACW45-94-D-0054, Delivery Order No. 01.

The Prove-Out Event Report presents the results of the Prove-Out Event performed at the initiation of remediation activities at the Ash Landfill site. Prove-Out tasks included excavation activities, start-up and trouble-shooting of the LTTD system, air pollution control operation, soil verification testing, and emission source testing. This report summarizes the Prove-Out event and presents the results of LTTD operation, soil sampling and emission source testing, as well as providing comments based on observations from the performance of the Prove-Out Event.

Questions concerning this document can be addressed to Mr. Peter Coutts or Mr. Jeffrey Korb of IT Corporation at (716) 271-6430.

Respectfully,

IT CORPORATION

Jeffrey D. Korb
Air Technical Manager

Peter W. Coutts
Project Technical Manager

JDK:PWC:jdk
Encl.

Regional Office
140 Allen's Creek Road • Suite 150 • Rochester, New York 14618 • 716-271-6430

IT Corporation is a wholly owned subsidiary of International Technology Corporation

INTERNATIONAL TECHNOLOGY CORPORATION

Memorandum

To: Greg Hoover USACE/ Denzie White USACE
Robert Rushing I.T. Corp

Date: January 17, 1995

From:
Pete Coutts

Subject:
Overexcavation of Area "A" Soil Borings SB-102 and SB-105

I spoke to Randy Battaglia (SEDA) regarding a request by Kamal Gupta (NYSDEC) to overexcavate soil boring locations SB-102 and SB-105. Phase I analytical results from these two boring locations showed elevated PAH concentrations and as a result NYSDEC has requested SEDA to overexcavate and treat soil from those two locations.

I informed Randy that soil boring location SB-102 had already been overexcavated by approximately three (3) feet and that backfill has already been placed in this area. Randy requested that we also overexcavate at soil boring location SB-105, and pull a sidewall confirmatory sample at the limit of overexcavation. This confirmatory sidewall sample should be taken from the same sample depth interval as the "hit" found in SB-105, and analyzed for PAH's.

Thank You

INTERNATIONAL TECHNOLOGY CORPORATION

Mr. Kamal Gupta P.E.
Division of Hazardous Waste Remediation
Room 223 A
New York State Department of Environmental Conservation
50 Wolf Road
Albany, New York 12233-7010

January 18, 1995

Ash Landfill Remediation-Operational Changes Due to Inclement Weather

IT Corporation is submitting this letter to outline specific changes in operational procedures which are required for project completion. Due to inclement weather and a rising groundwater table, alternative procedures for excavation, staging, and processing of soils are being implemented. In addition, the LTTD unit cannot process the saturated soils resulting from rising groundwater table conditions. IT Corp's proposed changes are as follows:

1) Treated soil stockpiles from Area A for which all analytical results have been received and which have been cleared for backfill will be stockpiled on Area B.

2) Area A will be excavated and staged in a multiple grid fashion. This removal and subsequent staging will allow the soil to be "freeze-dried" prior to processing through the LTTD unit. The LTTD unit can process frozen material but cannot process saturated material. The staged material will subsequently be covered with 6 mil reinforced poly per requirements outlined in the project workplan. The material will subsequently pass through a 2.5" debris shaker/screen to segregate any oversized debris from frozen LTTD feed material.

3) Processed material will also be backfilled in a multiple grid fashion. Treated soils from Area A will be stockpiled onto Area B prior to backfilling operations. Increased stockpile area will allow for a minimum number of backfilling and associated excavation dewatering events. This will significantly reduce the amount of water that would have to be managed and treated.

If you have any questions regarding the above, please do not hesitate to contact me at (716) 271-6430.

Sincerely,

Peter W. Coutts

IT CORPORATION
Peter W. Coutts
Technical Manager

INTERNATIONAL TECHNOLOGY CORPORATION

Memorandum

To: Robert Rushing, IT - Pittsburgh
Dave Buzzelli, IT - Rochester

Date: January 20, 1995

From: Pete Coutts, IT - Rochester

Subject: Treated Water Discharge

I spoke with Brian Baker (NYSDEC - Division of Water) regarding the 40,000 gallons of treated water we have stored on site. The treated water exceeded discharge criteria for 2 constituents; 1, 2 - Dichloroethene, and total dissolved solids (TDS).

Sample 1-D	Analytical Constituent	Constituent Concentrations (ppb)	Permit Levels (ppb)	Above Permit Levels ?
C-12-4	1-2 Dichloroethene	12.0	5.0	YES
C-12-4	TDS	578	500	YES

I received approval to discharge the water following the procedures outlined below:

Treated water will be re-treated through the system and directly discharged to the ground surface at a flow rate of approximately 25 gpm. A confirmatory sample will be pulled from the end of the treatment train and analyzed for 1-2 dichlorethene and TDS. The results will not be required prior to discharge.

Attached are sample results for the subject water.

January 19, 1995

Seneca Army Depot
Ash landfill, Phase II

Treated Wastewater Analytical Results
Sampled 1-13-95

The following analytical data represents one treated water sample taken on 1-13-95. The sample is representative of 40,000 gallons of treated water to be discharged.

Sample ID	Analytical Constituents	Constituent Concentrations (ppb)	Permit levels (ppb)	Above Permit Levels?
C-12-4	Volatiles			
	Trichloroethene	2.8	10	no
	1,2-Dichloroethene	12	5.0	yes
	Vinyl Chloride	<1.0	5.0	no
	Chloroform	<0.20	7.0	no
	1,1-Dichloroethene	<0.20	5.0	no
	1,1-Dichloroethane	<0.20	5.0	no
	1,1,1-Trichloroethane	<0.20	5.0	no
	Tetrachloroethene	<0.20	5.0	no
	Benzene	<0.20	0.70	no
	Toluene	0.53	5.0	no
	Ethylbenzene	<0.20	5.0	no
	Total Xylenes	1.1	5.0	no
	Semivolatiles			
	Napthalene	<10	10	no
	Phenol	<8.0	8	no
	Diethyl phthalate	0.30 J	50	no
	Di-n-butylphthalate	0.40 J	770	no
	Metals			
	Aluminum	542	2000	no
	Antimony	<4.0	10	no
	Arsenic	<5.0	50	no
	Cadmium	<5.0	20	no
	Chromium	<10	100	no
	Copper	<10	1000	no
	Iron	388	800	no
	Lead	<30	50	no
	Mercury	<0.20	4	no
	Nickel	<20	2000	no
	Silver	<10	100	no
	Zinc	41	5000	no
	Classical Chemistry			
	Total Cyanide	<0.010 ppm	400	no
	pH	7.89	6.5 - 8.5	no
	Oil & Grease	<5.0 ppm	15 ppm	no
	TDS	578 ppm	500 ppm	yes
	Turbidity	9.8	50 NTU	no

Notes:
ppb - Parts per billion
ppm - Parts per million
J - Estimated concentration. Indicates the constituent concentration is detected above the Instrument Detection Limit (IDL) but below the Practical Quantitation Limit (PQL).
B - Indicates the constituent was also detected in the associated method blank.

sp2wwds2.doc

INTERNATIONAL TECHNOLOGY CORPORATION

January 23, 1995

Mr. Andrew Winslow
U.S. Army Corps of Engineers
Omaha District
Attn: CEMRO-ED-ER
215 North 17th Street
Omaha, Nebraska 68102-4978

Project No. 519200

Contract No. DACW45-94-D-0054
Delivery Order No. 01
Seneca Army Depot Activity Ash Landfill Immediate Response Measure
Request for Variance in Project Reporting Requirements

Dear Mr. Winslow:

Under the requirements outlined in the U.S. Army Corps of Engineers (USACE) Scope of Work document (dated August 18, 1994) and the project Work Plan developed by IT Corporation (IT), IT is responsible for preparing and submitting a series of daily and weekly project status reports and monthly data reports to the USACE. The Chemical Sampling and Analysis Plan (CSAP) and Air Monitoring Plan (AMP), appendices of the project Work Plan, require a monthly data report that includes sampling activities and results.

IT requests of the USACE approval for a variance in the Work Plan reporting requirements to allow IT to prepare and develop a Mid-Project Data Report in place of the monthly report. The Mid-Project Data Report will contain sampling and analysis information, raw data, and conclusions, all as required in the monthly report. This format will allow the incorporation of an extended duration of project time for formal data reporting.

At this time, IT is nearing completion of the Mid-Project Data Report, encompassing data from the end of the Prove-Out Event (November 8, 1994) to December 22, 1994, when the project was shut down for the holidays. This data will represent approximately one-half of the data generated for the project to date. We hope that this format will be more efficient for all parties and result in a greater utilization of the data.

Regional Office
140 Allen's Creek Road • Suite 150 • Rochester, New York 14618 • 716-271-6430

IT Corporation is a wholly owned subsidiary of International Technology Corporation

Please contact the undersigned at (716) 271-6430 if you have any questions or comments. IT wishes to thank you ahead of time and appreciates your prompt and timely response to this issue.

Respectfully Submitted,

IT CORPORATION

Jeffrey D. Korb
Technical Manager- Air

Peter W. Coutts
Project Technical Manager

JDK:PWC:jk
Attachments

cc: Mr. Randall Battaglia- U.S. Army, Seneca Army Depot
Mr. Kamal Gupta- NYSDEC
Mr. Dan Geraghty- NYSDOH
Ms. Carla Strubel- U.S. EPA Region II
Mr. Douglas Wehner- IT Corporation
Mr. Robert Rushing- IT Corporation

INTERNATIONAL TECHNOLOGY CORPORATION

January 25, 1995

Mr. Ed Bave
U.S. Army Corps of Engineers
Omaha District
Attn: CEMRO-ED-EH
215 North 17th Street
Omaha, Nebraska 68102-4978

Project No. 519200

Contract No. DACW45-94-D-0054
Delivery Order No. 01
Seneca Army Depot Activity Ash Landfill Immediate Response Measure
Completion of PM_{10} & TSP Trial Monitoring Period

Dear Mr. Bave:

IT Corporation (IT) is currently implementing an Immediate Response Measure (IRM) for the Ash Landfill site at the Seneca Army Depot Activity in Romulus, New York. Under the direction of the U.S. Army Corps of Engineers (USACE) Omaha District, IT is conducting a remedial action involving low temperature thermal desorption (LTTD) of soil material present at the Ash Landfill. As part of this program, ambient air monitoring stations have been located at the perimeter of the project site to assist in measuring the dispersion of volatile organic compounds (VOCs) and particulate matter generated from project activities. These monitoring stations have been in operation since the initiation of intrusive activities at the site on October 18, 1994.

The perimeter monitoring stations are comprised of PM_{10} samplers, total suspended particulate (TSP) samplers, direct-read VOC monitors, and direct-read particulate monitors. The original air monitoring program, as outlined in the USACE Scope of Services document and the project Work Plan developed by IT, included provision for a trial monitoring period for the PM_{10} and TSP sampling. The trial period was designed to collect analytical data over a period of time while simultaneously collecting real-time data with the direct-read monitors. The sampling results from the PM_{10} and TSP measurements, when compared to the direct-read monitoring results, will allow for an evaluation of the trial monitoring period. If the data indicates that the direct-read monitoring successfully monitored ambient conditions at the perimeter, the PM_{10} and TSP samplers may be removed from the perimeter stations.

Attached to this letter are two tables that contain the preliminary data. First, the raw data for the direct-read monitors are presented, with the results per day per station included. The PM_{10} and TSP samplers, as well as the direct-read monitoring results starting from the beginning of the project are presented in the second table. A comparison between the different monitoring results

Regional Office
140 Allen's Creek Road • Suite 150 • Rochester, New York 14618 • 716-271-6430

IT Corporation is a wholly owned subsidiary of International Technology Corporation

indicates that the direct-read monitors exhibit a wide range of accuracy in measuring ambient particulate matter. Correlation between the direct-read and PM_{10} sampling is as expected, with the direct-read monitors demonstrating an accuracy within +/- 25 percent of the PM_{10} results in most cases. Please note that the data included is *preliminary*, having not undergone thorough technical review or quality control review.

IT requests the opportunity to discontinue the PM_{10} and TSP sampling activities at the perimeter monitoring stations. We feel that the direct-read monitors currently operating at the perimeter stations are capable and sufficient to measure any possible dispersion of particulate matter generated from project activities, for the remainder of the project. If the USACE concurs with this opinion, IT will forward a revised version of this letter to the NYSDEC and NYSDOH representatives requesting approval to discontinue these sampling activities. If approved, IT will dismantle and remove the sampling instruments from the site in a timely fashion.

Please contact the undersigned at (716) 271-6430 if you have any questions or comments. IT wishes to thank you ahead of time and appreciates your prompt and timely response to this issue.

Respectfully Submitted,

IT CORPORATION

Jeffrey D. Korb
Technical Manager- Air

Peter W. Coutts
Project Technical Manager

JDK:PWC:jk
Attachments

cc: Mr. Andrew Winslow- U.S. Army Corps of Engineers, Omaha District
Mr. Greg Hoover, U.S. Army Corps of Engineers, Romulus, N.Y.
Mr. Randall Battaglia- U.S. Army, Seneca Army Depot
Mr. Kamal Gupta- NYSDEC, Div. of Hazardous Waste Remediation
Mr. Daniel Geraghty, NYSDOH, Bureau of Env. Exposure Investigation
Mr. Douglas Wehner- IT Corporation
Mr. Robert Rushing- IT Corporation
Ms. Carla Strubel- U.S. EPA Region II

Table 1
U.S. Army Corps of Engineers Omaha District
Seneca Army Depot, Romulus, New York
Direct-Read Monitoring Data

Date Sampled	Time	Type	Station #	Results mg/m3	Results ug/m3
10/13/94	1310-1720	PM	1	0.03	30
10/13/94	1310-1720	PM	2	0	0
10/13/94	1310-1720	PM	3	0.01	10
10/14/94	0800-1720	PM	1	0.01	10
10/14/94	0800-1720	PM	2	0	0
10/14/94	0800-1720	PM	3	0	0
10/17/94	0845-1245	PM	1	0	0
10/17/94	1245-1745	PM	1	0	0
10/17/94	0900-1300	PM	2	0.35	350
10/17/94	1300-1745	PM	2	0.36	360
10/17/94	1300-1745	PM	3	0	0
10/17/94	0900-1300	PM	3	0	0
10/18/94	0830-1700	PM	1	0.59	590
10/18/94	0830-1700	PM	2	0	0
10/18/94	0830-1700	PM	3	0	0
10/19/94	0800-1200	PM	1	0	0
10/19/94	0800-1200	PM	2	0	0
10/19/94	0800-1200	PM	3	0	0
10/20/94	0830-1700	PM	1	0	0
10/20/94	0830-1700	PM	2	0	0
10/20/94	0830-1700	PM	3	0	0
10/21/94	0730-1700	PM	1	0	0
10/21/94	0730-1700	PM	2	0	0
10/21/94	0730-1700	PM	3	0	0
10/28/94	1200-1500	PM	1	0	0
10/28/94	1200-1500	PM	2	0	0
10/28/94	1200-1500	PM	3	0.13	130
10/31/94	0800-1700	PM	1	0	0
10/31/94	1700-2230	PM	1	0	0
10/31/94	0800-1700	PM	2	0.24	240
10/31/94	1700-2230	PM	2	0.36	360
10/31/94	0800-1700	PM	3	0	0
10/31/94	1700-2230	PM	3	0	0
11/1/94	2230-1200	PM	1	0	0
11/1/94	2230-1200	PM	2	0	0
11/1/94	2230-1200	PM	3	0	0
11/2/94	1600-2230	PM	1	0	0
11/2/94	1600-2230	PM	2	0	0
11/2/94	1600-2230	PM	3	0.08	80
11/3/94	0000-0530	PM	1	0	0
11/3/94	0900-1500	PM	1	0	0
11/3/94	0900-1500	PM	1	0	0
11/3/94	1500-2100	PM	2	0.12	120
11/3/94	0900-1500	PM	2	0	0
11/3/94	0000-0600	PM	2	0	0

PRELIMINARY

Table 1
U.S. Army Corps of Engineers Omaha District
Seneca Army Depot, Romulus, New York
Direct-Read Monitoring Data

Date Sampled	Time	Type	Station #	Results mg/m3	Results ug/m3
11/3/94	0000-0630	PM	3	0.16	160
11/3/94	0900-1500	PM	3	1	1000
11/3/94	1500-2100	PM	3	0	0
11/5/94	0430-1100	PM	1	0	0
11/5/94	1100-1500	PM	1	0	0
11/5/94	0800-1700	PM	1	0	0
11/5/94	0000-0430	PM	1	0.05	50
11/5/94	0800-1700	PM	2	0	0
11/5/94	0000-0430	PM	2	0	0
11/5/94	0430-1100	PM	2	0	0
11/5/94	1100-1500	PM	2	0	0
11/5/94	0000-0430	PM	3	0.02	20
11/5/94	0800-1700	PM	3	0	0
11/5/94	0430-1100	PM	3	0	0
11/5/94	1100-1500	PM	3	0	0
11/7/94	0800-1745	PM	1	0	0
11/7/94	0800-1745	PM	2	0	0
11/7/94	0800-1745	PM	3	0	0
11/8/94	0830-1700	PM	1	23	23000
11/8/94	0830-1700	PM	2	0	0
11/8/94	0830-1700	PM	3	0	0
11/9/94	0830-1445	PM	1	0.07	70
11/9/94	0830-1445	PM	2	0	0
11/9/94	0830-1445	PM	3	0.02	20
11/10/94	0830-1400	PM	1	0.2	200
11/10/94	0830-1400	PM	2	0	0
11/10/94	0830-1400	PM	3	0.46	460
11/13/94	2100	PM	1	0.04	40
11/13/94	2334	PM	1	0.04	40
11/13/94	1800	PM	1	0.11	110
11/13/94	2120	PM	2	0	0
11/13/94	2355	PM	2	0	0
11/13/94	1830	PM	2	0	0
11/13/94	2350	PM	3	0.05	50
11/13/94	1845	PM	3	0.09	90
11/13/94	2115	PM	3	0.05	50
11/14/94	1100	PM	1	0.01	10
11/14/94	405	PM	1	0.02	20
11/14/94	800	PM	1	0.03	30
11/14/94	624	PM	1	0.03	30
11/14/94	2245	PM	1	0.02	20
11/14/94	930	PM	1	0.02	20
11/14/94	2045	PM	1	0.01	10
11/14/94	1845	PM	1	0.01	10
11/14/94	1645	PM	1	0.01	10

PRELIMINARY

Table 1
U.S. Army Corps of Engineers Omaha District
Seneca Army Depot, Romulus, New York
Direct-Read Monitoring Data

Date Sampled	Time	Type	Station #	Results mg/m3	Results ug/m3
11/14/94	150	PM	1	0.02	20
11/14/94	1300	PM	1	0.01	10
11/14/94	1500	PM	1	0.01	10
11/14/94	1100	PM	2	0.02	20
11/14/94	1645	PM	2	0.09	90
11/14/94	1500	PM	2	0.09	90
11/14/94	2245	PM	2	0.04	40
11/14/94	1845	PM	2	0.03	30
11/14/94	930	PM	2	0.02	20
11/14/94	800	PM	2	0.02	20
11/14/94	1300	PM	2	0.01	10
11/14/94	942	PM	2	0.01	10
11/14/94	420	PM	2	0.01	10
11/14/94	150	PM	2	0.01	10
11/14/94	2045	PM	2	0.03	30
11/14/94	1500	PM	3	0.01	10
11/14/94	930	PM	3	0.07	70
11/14/94	1845	PM	3	0.17	170
11/14/94	1100	PM	3	0.17	170
11/14/94	1300	PM	3	0.1	100
11/14/94	1645	PM	3	0.09	90
11/14/94	800	PM	3	0.06	60
11/14/94	637	PM	3	0.06	60
11/14/94	415	PM	3	0.06	60
11/14/94	150	PM	3	0.06	60
11/14/94	2245	PM	3	0.03	30
11/14/94	2045	PM	3	0.04	40
11/15/94	1830	PM	1	0	0
11/15/94	445	PM	1	0.03	30
11/15/94	346	PM	1	0.03	30
11/15/94	2030	PM	1	0	0
11/15/94	2230	PM	1	0	0
11/15/94	45	PM	1	0.04	40
11/15/94	1400	PM	1	0	0
11/15/94	1230	PM	1	0	0
11/15/94	1030	PM	1	0	0
11/15/94	830	PM	1	0	0
11/15/94	630	PM	1	0	0
11/15/94	245	PM	1	0.02	20
11/15/94	1715	PM	1	0	0
11/15/94	1830	PM	2	0	0
11/15/94	346	PM	2	0.04	40
11/15/94	245	PM	2	0.04	40
11/15/94	45	PM	2	0.04	40
11/15/94	2030	PM	2	0	0

PRELIMINARY

Table 1
U.S. Army Corps of Engineers Omaha District
Seneca Army Depot, Romulus, New York
Direct-Read Monitoring Data

Date Sampled	Time	Type	Station #	Results mg/m3	Results ug/m3
11/15/94	445	PM	2	0.04	40
11/15/94	1715	PM	2	0	0
11/15/94	1400	PM	2	0	0
11/15/94	1230	PM	2	0	0
11/15/94	1030	PM	2	0	0
11/15/94	830	PM	2	0	0
11/15/94	630	PM	2	0	0
11/15/94	2230	PM	2	0	0
11/15/94	2030	PM	3	0	0
11/15/94	346	PM	3	0.03	30
11/15/94	445	PM	3	0.03	30
11/15/94	245	PM	3	0.03	30
11/15/94	45	PM	3	0.03	30
11/15/94	2230	PM	3	0	0
11/15/94	1830	PM	3	0	0
11/15/94	1715	PM	3	0	0
11/15/94	1400	PM	3	0	0
11/15/94	1230	PM	3	0	0
11/15/94	1030	PM	3	0	0
11/15/94	630	PM	3	0	0
11/15/94	830	PM	3	0	0
11/16/94	1230	PM	1	0.04	40
11/16/94	30	PM	1	0	0
11/16/94	1630	PM	1	0.3	300
11/16/94	1430	PM	1	0.2	200
11/16/94	2230	PM	1	0.05	50
11/16/94	2030	PM	1	0.05	50
11/16/94	1830	PM	1	0.03	30
11/16/94	920	PM	1	0.03	30
11/16/94	630	PM	1	0.03	30
11/16/94	1030	PM	1	0.04	40
11/16/94	230	PM	1	0	0
11/16/94	430	PM	1	0.03	30
11/16/94	1430	PM	2	0	0
11/16/94	430	PM	2	0.01	10
11/16/94	2230	PM	2	0	0
11/16/94	2030	PM	2	0	0
11/16/94	1630	PM	2	0	0
11/16/94	1230	PM	2	0	0
11/16/94	1030	PM	2	0	0
11/16/94	920	PM	2	0	0
11/16/94	630	PM	2	0	0
11/16/94	230	PM	2	0	0
11/16/94	30	PM	2	0	0
11/16/94	1830	PM	2	0	0

PRELIMINARY

Table 1
U.S. Army Corps of Engineers Omaha District
Seneca Army Depot, Romulus, New York
Direct-Read Monitoring Data

Date Sampled	Time	Type	Station #	Results mg/m3	Results ug/m3
11/16/94	920	PM	3	0	0
11/16/94	1630	PM	3	0	0
11/16/94	1030	PM	3	0.01	10
11/16/94	2230	PM	3	0	0
11/16/94	2030	PM	3	0	0
11/16/94	1830	PM	3	0	0
11/16/94	1230	PM	3	0	0
11/16/94	30	PM	3	0	0
11/16/94	630	PM	3	0	0
11/16/94	430	PM	3	0	0
11/16/94	230	PM	3	0	0
11/16/94	1430	PM	3	[illegible]	0
11/17/94	1030	PM	1	0.08	80
11/17/94	1630	PM	1	0.14	140
11/17/94	2000	PM	1	0.12	120
11/17/94	2200	PM	1	0.09	90
11/17/94	830	PM	1	0.08	80
11/17/94	630	PM	1	0.07	70
11/17/94	230	PM	1	0.07	70
11/17/94	30	PM	1	0.05	50
11/17/94	1830	PM	1	0.14	140
11/17/94	430	PM	1	0.1	100
11/17/94	1030	PM	2	0	0
11/17/94	2200	PM	2	0	0
11/17/94	2000	PM	2	0	0
11/17/94	1830	PM	2	0	0
11/17/94	1630	PM	2	0	0
11/17/94	630	PM	2	0	0
11/17/94	430	PM	2	0	0
11/17/94	30	PM	2	0	0
11/17/94	230	PM	2	0	0
11/17/94	955	PM	2	0	0
11/17/94	2000	PM	3	0	0
11/17/94	430	PM	3	0.05	50
11/17/94	630	PM	3	0.02	20
11/17/94	230	PM	3	0.01	10
11/17/94	1830	PM	3	0	0
11/17/94	1630	PM	3	0	0
11/17/94	1030	PM	3	0	0
11/17/94	925	PM	3	0	0
11/17/94	30	PM	3	0	0
11/17/94	2200	PM	3	0.01	10
11/18/94	1630	PM	1	0.03	30
11/18/94	0	PM	1	0.1	100
11/18/94	1030	PM	1	0.1	100

PRELIMINARY

Table 1
U.S. Army Corps of Engineers Omaha District
Seneca Army Depot, Romulus, New York
Direct-Read Monitoring Data

Date Sampled	Time	Type	Station #	Results mg/m3	Results ug/m3
11/18/94	830	PM	1	0.1	100
11/18/94	1230	PM	1	0.11	110
11/18/94	200	PM	1	0.1	100
11/18/94	400	PM	1	0.09	90
11/18/94	600	PM	1	0.08	80
11/18/94	2230	PM	1	0.05	50
11/18/94	1830	PM	1	0.04	40
11/18/94	1430	PM	1	0.02	20
11/18/94	2030	PM	1	0.04	40
11/18/94	600	PM	2	0	0
11/18/94	2030	PM	2	0	0
11/18/94	1830	PM	2	0	0
11/18/94	1630	PM	2	0	0
11/18/94	2230	PM	2	0	0
11/18/94	1430	PM	2	0	0
11/18/94	830	PM	2	0	0
11/18/94	400	PM	2	0	0
11/18/94	200	PM	2	0	0
11/18/94	0	PM	2	0	0
11/18/94	1030	PM	2	0	0
11/18/94	1230	PM	2	0	0
11/18/94	1630	PM	3	0	0
11/18/94	1830	PM	3	0.08	80
11/18/94	2230	PM	3	0.07	70
11/18/94	2030	PM	3	0.06	60
11/18/94	0	PM	3	0.01	10
11/18/94	1230	PM	3	0	0
11/18/94	1030	PM	3	0	0
11/18/94	830	PM	3	0	0
11/18/94	600	PM	3	0	0
11/18/94	400	PM	3	0	0
11/18/94	200	PM	3	0	0
11/18/94	1430	PM	3	0.02	20
11/19/94	1030	PM	1	0	0
11/19/94	1430	PM	1	0.1	100
11/19/94	830	PM	1	0.14	140
11/19/94	630	PM	1	0.14	140
11/19/94	430	PM	1	0.14	140
11/19/94	230	PM	1	0.14	140
11/19/94	130	PM	1	0.14	140
11/19/94	1230	PM	1	0.09	90
11/19/94	1630	PM	1	0.07	70
11/19/94	2030	PM	1	0.06	60
11/19/94	1830	PM	1	0.06	60
11/19/94	30	PM	1	0.04	40

PRELIMINARY

Table 1
U.S. Army Corps of Engineers Omaha District
Seneca Army Depot, Romulus, New York
Direct-Read Monitoring Data

Date Sampled	Time	Type	Station #	Results mg/m3	Results ug/m3
11/19/94	2230	PM	1	0.05	50
11/19/94	830	PM	2	0	0
11/19/94	2230	PM	2	0.03	30
11/19/94	2030	PM	2	0.03	30
11/19/94	1430	PM	2	0.03	30
11/19/94	1230	PM	2	0.03	30
11/19/94	1630	PM	2	0.04	40
11/19/94	630	PM	2	0	0
11/19/94	430	PM	2	0	0
11/19/94	230	PM	2	0	0
11/19/94	130	PM	2	0	0
11/19/94	30	PM	2	0	0
11/19/94	1030	PM	2	0.02	20
11/19/94	1830	PM	2	0.01	10
11/19/94	2230	PM	3	0.12	120
11/19/94	2030	PM	3	0.13	130
11/19/94	130	PM	3	0.12	120
11/19/94	1830	PM	3	0.08	80
11/19/94	230	PM	3	0.08	80
11/19/94	1630	PM	3	0.07	70
11/19/94	1230	PM	3	0.07	70
11/19/94	1030	PM	3	0.07	70
11/19/94	830	PM	3	0.07	70
11/19/94	630	PM	3	0.06	60
11/19/94	430	PM	3	0.06	60
11/19/94	30	PM	3	0.06	60
11/19/94	1430	PM	3	0.07	70
11/20/94	825	PM	1	0.03	30
11/20/94	2225	PM	1	0.1	100
11/20/94	2030	PM	1	0.1	100
11/20/94	1630	PM	1	0.06	60
11/20/94	1830	PM	1	0.05	50
11/20/94	1230	PM	1	0.04	40
11/20/94	1430	PM	1	0	0
11/20/94	1030	PM	1	0.03	30
11/20/94	630	PM	1	0.03	30
11/20/94	430	PM	1	0.03	30
11/20/94	230	PM	1	0.03	30
11/20/94	30	PM	1	0.04	40
11/20/94	1630	PM	2	0.02	20
11/20/94	2030	PM	2	0.01	10
11/20/94	1230	PM	2	0.02	20
11/20/94	1830	PM	2	0.02	20
11/20/94	2225	PM	2	0.02	20
11/20/94	825	PM	2	0.03	30

PRELIMINARY

Table 1
U.S. Army Corps of Engineers Omaha District
Seneca Army Depot, Romulus, New York
Direct-Read Monitoring Data

Date Sampled	Time	Type	Station #	Results mg/m3	Results ug/m3
11/20/94	1030	PM	2	0.03	30
11/20/94	630	PM	2	0.05	50
11/20/94	430	PM	2	0.06	60
11/20/94	230	PM	2	0.07	70
11/20/94	30	PM	2	0.08	80
11/20/94	1430	PM	2	0.02	20
11/20/94	430	PM	3	0.1	100
11/20/94	630	PM	3	0.11	110
11/20/94	230	PM	3	0.1	100
11/20/94	2225	PM	3	0.08	80
11/20/94	2030	PM	3	0.08	80
11/20/94	1630	PM	3	0.08	80
11/20/94	1430	PM	3	0.08	80
11/20/94	1230	PM	3	0.08	80
11/20/94	825.	PM	3	0	0
11/20/94	1030	PM	3	0	0
11/20/94	30	PM	3	0.12	120
11/20/94	1830	PM	3	0.08	80
11/21/94	2000	PM	1	0	0
11/21/94	615	PM	1	0.2	200
11/21/94	230	PM	1	0.15	150
11/21/94	430	PM	1	0.14	140
11/21/94	2200	PM	1	0	0
11/21/94	1830	PM	1	0	0
11/21/94	1630	PM	1	0	0
11/21/94	1430	PM	1	0	0
11/21/94	1030	PM	1	0	0
11/21/94	30	PM	1	0.14	140
11/21/94	1630	PM	2.	0.02	20
11/21/94	1030	PM	2.	0.03	30
11/21/94	1230	PM	2	0.03	30
11/21/94	615	PM	2.	0.03	30
11/21/94	1830	PM	2	0.02	20
11/21/94	230	PM	2	0.02	20
11/21/94	30	PM	2	0.02	20
11/21/94	2000	PM	2	0	0
11/21/94	2200	PM	2	0	0
11/21/94	430	PM	2.	0.02	20
11/21/94	1630	PM	3	0	0
11/21/94	230	PM	3	0	0
11/21/94	30	PM	3	0.08	80
11/21/94	2200	PM	3	0	0
11/21/94	1830	PM	3	0	0
11/21/94	1230	PM	3	0.	0
11/21/94	1030	PM	3	0	0

PRELIMINARY

Table 1
U.S. Army Corps of Engineers Omaha District
Seneca Army Depot, Romulus, New York
Direct-Read Monitoring Data

Date Sampled	Time	Type	Station #	Results mg/m3	Results ug/m3
11/21/94	615	PM	3	0	0
11/21/94	430	PM	3	0	0
11/21/94	2000	PM	3	0	0
11/22/94	1830	PM	1	0	0
11/22/94	1630	PM	1	0	0
11/22/94	1230	PM	1	0.01	10
11/22/94	2030	PM	1	0	0
11/22/94	1430	PM	1	0.01	10
11/22/94	600	PM	1	0	0
11/22/94	400	PM	1	0	0
11/22/94	200	PM	1	0	0
11/22/94	5	PM	1	0	0
11/22/94	2230	PM	1	0	0
11/22/94	1030	PM	1	0	0
11/22/94	1030	PM	2	0.02	20
11/22/94	2030	PM	2	0.03	30
11/22/94	1830	PM	2	0.03	30
11/22/94	1430	PM	2	0.03	30
11/22/94	2230	PM	2	0.02	20
11/22/94	1630	PM	2	0	0
11/22/94	600	PM	2	0	0
11/22/94	400	PM	2	0	0
11/22/94	200	PM	2	0	0
11/22/94	5	PM	2	0	0
11/22/94	1230	PM	2	0.03	30
11/22/94	1230	PM	3	0	0
11/22/94	2230	PM	3	0	0
11/22/94	1630	PM	3	0	0
11/22/94	1830	PM	3	0	0
11/22/94	1430	PM	3	0	0
11/22/94	600	PM	3	0	0
11/22/94	2030	PM	3	0	0
11/22/94	400	PM	3	0	0
11/22/94	200	PM	3	0	0
11/22/94	5	PM	3	0	0
11/22/94	1030	PM	3	0	0
11/23/94	2020	PM	1	0	0
11/23/94	1322	PM	1	0.06	60
11/23/94	1522	PM	1	0.04	40
11/23/94	1722	PM	1	0.03	30
11/23/94	2245	PM	1	0	0
11/23/94	1100	PM	1	0	0
11/23/94	620	PM	1	0	0
11/23/94	420	PM	1	0	0
11/23/94	225	PM	1	0	0

PRELIMINARY

Table 1
U.S. Army Corps of Engineers Omaha District
Seneca Army Depot, Romulus, New York
Direct-Read Monitoring Data

Date Sampled	Time	Type	Station #	Results mg/m3	Results ug/m3
11/23/94	30	PM	1	0	0
11/23/94	905	PM	1	0.01	10
11/23/94	2245	PM	2	0.06	60
11/23/94	1522	PM	2	0.07	70
11/23/94	1100	PM	2	0.12	120
11/23/94	1322	PM	2	0.09	90
11/23/94	2020	PM	2	0.07	70
11/23/94	620	PM	2	0.03	30
11/23/94	905	PM	2	0.01	10
11/23/94	420	PM	2	0.03	30
11/23/94	225	PM	2	0.03	30
11/23/94	30	PM	2	0.02	20
11/23/94	1722	PM	2	0.07	70
11/23/94	2245	PM	3	0.01	10
11/23/94	1100	PM	3	0.1	100
11/23/94	620	PM	3	0.07	70
11/23/94	1322	PM	3	0.04	40
11/23/94	1722	PM	3	0.02	20
11/23/94	2020	PM	3	0.01	10
11/23/94	905	PM	3	0.01	10
11/23/94	420	PM	3	0	0
11/23/94	225	PM	3	0	0
11/23/94	30	PM	3	0	0
11/23/94	1522	PM	3	0.03	30
11/24/94	230	PM	1	0	0
11/24/94	2000	PM	1	0	0
11/24/94	1400	PM	1	0	0
11/24/94	1800	PM	1	0	0
11/24/94	2200	PM	1	0	0
11/24/94	1600	PM	1	0	0
11/24/94	1000	PM	1	0	0
11/24/94	800	PM	1	0	0
11/24/94	430	PM	1	0	0
11/24/94	30	PM	1	0	0
11/24/94	630	PM	1	0	0
11/24/94	1200	PM	1	0	0
11/24/94	1400	PM	2	0.04	40
11/24/94	630	PM	2	0.11	110
11/24/94	430	PM	2	0.1	100
11/24/94	230	PM	2	0.1	100
11/24/94	1200	PM	2	0.07	70
11/24/94	1000	PM	2	0.04	40
11/24/94	1600	PM	2	0.03	30
11/24/94	2200	PM	2	0.02	20
11/24/94	2000	PM	2	0.02	20

PRELIMINAR

Table 1
U.S. Army Corps of Engineers Omaha District
Seneca Army Depot, Romulus, New York
Direct-Read Monitoring Data

Date Sampled	Time	Type	Station #	Results mg/m3	Results ug/m3
11/24/94	1800	PM	2	0.02	20
11/24/94	820	PM	2	0	0
11/24/94	30	PM	2	0.1	100
11/24/94	1400	PM	3	0	0
11/24/94	430	PM	3	0.02	20
11/24/94	630	PM	3	0.03	30
11/24/94	1200	PM	3	0.04	40
11/24/94	1000	PM	3	0.02	20
11/24/94	840	PM	3	0.02	20
11/24/94	1800	PM	3	0.01	10
11/24/94	1600	PM	3	0.01	10
11/24/94	230	PM	3	0.01	10
11/24/94	30	PM	3	0.01	10
11/24/94	2000	PM	3	0	0
11/24/94	2200	PM	3	0	0
11/25/94	1000	PM	1	0	0
11/25/94	2350	PM	1	0	0
11/25/94	2200	PM	1	0	0
11/25/94	2000	PM	1	0	0
11/25/94	1800	PM	1	0	0
11/25/94	1600	PM	1	0	0
11/25/94	1400	PM	1	0	0
11/25/94	735	PM	1	0	0
11/25/94	600	PM	1	0	0
11/25/94	400	PM	1	0	0
11/25/94	200	PM	1	0	0
11/25/94	10	PM	1	0	0
11/25/94	1200	PM	1	0	0
11/25/94	1000	PM	2	0.02	20
11/25/94	1600	PM	2	0.13	130
11/25/94	1800	PM	2	0.09	90
11/25/94	1200	PM	2	0.09	90
11/25/94	2200	PM	2	0.06	60
11/25/94	1400	PM	2	1.6	1600
11/25/94	2350	PM	2	0	0
11/25/94	800	PM	2	0	0
11/25/94	600	PM	2	0	0
11/25/94	400	PM	2	0	0
11/25/94	200	PM	2	0	0
11/25/94	10	PM	2	0	0
11/25/94	2000	PM	2	0.07	70
11/25/94	2200	PM	3	0.11	110
11/25/94	1800	PM	3	1.4	1400
11/25/94	1400	PM	3	1.2	1200
11/25/94	1000	PM	3	0.4	400

PRELIMINARY

Table 1
U.S. Army Corps of Engineers Omaha District
Seneca Army Depot, Romulus, New York
Direct-Read Monitoring Data

Date Sampled	Time	Type	Station #	Results mg/m3	Results ug/m3
11/25/94	1600	PM	3	0.14	140
11/25/94	2000	PM	3	0.12	120
11/25/94	600	PM	3	0.04	40
11/25/94	2350	PM	3	0.03	30
11/25/94	1200	PM	3	0.02	20
11/25/94	811	PM	3	0	0
11/25/94	400	PM	3	0	0
11/25/94	10	PM	3	0	0
11/25/94	200	PM	3	0	0
11/26/94	1700	PM	1	0	0
11/26/94	2200	PM	1	0	0
11/26/94	2355	PM	1	0	0
11/26/94	2010	PM	1	0	0
11/26/94	1900	PM	1	0	0
11/26/94	1300	PM	1	0	0
11/26/94	1020	PM	1	0	0
11/26/94	600	PM	1	0	0
11/26/94	200	PM	1	0	0
11/26/94	400	PM	1	0	0
11/26/94	1500	PM	1	0	0
11/26/94	1900	PM	2	0	0
11/26/94	200	PM	2	0	0
11/26/94	1500	PM	2	0.02	20
11/26/94	1300	PM	2	0.01	10
11/26/94	2355	PM	2	0	0
11/26/94	2010	PM	2	0	0
11/26/94	1700	PM	2	0	0
11/26/94	1045	PM	2	0	0
11/26/94	600	PM	2	0	0
11/26/94	400	PM	2	0	0
11/26/94	2200	PM	2	0	0
11/26/94	600	PM	3	0.01	10
11/26/94	2355	PM	3	0	0
11/26/94	200	PM	3	0.04	40
11/26/94	1300	PM	3	0.01	10
11/26/94	400	PM	3	0.04	40
11/26/94	2010	PM	3	0	0
11/26/94	1900	PM	3	0	0
11/26/94	1700	PM	3	0	0
11/26/94	1500	PM	3	0	0
11/26/94	1052	PM	3	0.02	20
11/26/94	2200	PM	3	0	0
11/27/94	2200	PM	1	0.05	50
11/27/94	2000	PM	1	0.12	120
11/27/94	1800	PM	1	0.11	110

PRELIMINARY

Table 1
U.S. Army Corps of Engineers Omaha District
Seneca Army Depot, Romulus, New York
Direct-Read Monitoring Data

Date Sampled	Time	Type	Station #	Results mg/m3	Results ug/m3
11/27/94	1600	PM	1	0.11	110
11/27/94	2400	PM	1	0.06	60
11/27/94	1200	PM	1	0.02	20
11/27/94	1000	PM	1	0.01	10
11/27/94	750	PM	1	0	0
11/27/94	600	PM	1	0	0
11/27/94	400	PM	1	0	0
11/27/94	200	PM	1	0	0
11/27/94	1400	PM	1	0.08	80
11/27/94	1600	PM	2	0	0
11/27/94	200	PM	2	0	0
11/27/94	2200	PM	2	0	0
11/27/94	2400	PM	2	0	0
11/27/94	2000	PM	2	0	0
11/27/94	1800	PM	2	0	0
11/27/94	1200	PM	2	0	0
11/27/94	1000	PM	2	0	0
11/27/94	810	PM	2	0	0
11/27/94	400	PM	2	0	0
11/27/94	1400	PM	2	0	0
11/27/94	600	PM	2	0	0
11/27/94	1000	PM	3	0.02	20
11/27/94	1400	PM	3	0.03	30
11/27/94	2200	PM	3	0.02	20
11/27/94	2000	PM	3	0.02	20
11/27/94	1200	PM	3	0.02	20
11/27/94	1600	PM	3	0.03	30
11/27/94	2400	PM	3	0.01	10
11/27/94	819	PM	3	0	0
11/27/94	600	PM	3	0	0
11/27/94	400	PM	3	0	0
11/27/94	200	PM	3	0	0
11/27/94	1800	PM	3	0.02	20
11/28/94	2300	PM	1	0	0
11/28/94	810	PM	1	0.08	80
11/28/94	600	PM	1	0.07	70
11/28/94	200	PM	1	0.05	50
11/28/94	400	PM	1	0.04	40
11/28/94	2100	PM	1	0	0
11/28/94	1900	PM	1	0	0
11/28/94	1700	PM	1	0	0
11/28/94	1500	PM	1	0	0
11/28/94	1100	PM	1	0	0
11/28/94	1300	PM	1	0	0
11/28/94	1500	PM	2	0	0

PRELIMINARY

Table 1
U.S. Army Corps of Engineers Omaha District
Seneca Army Depot, Romulus, New York
Direct-Read Monitoring Data

Date Sampled	Time	Type	Station #	Results mg/m3	Results ug/m3
11/28/94	1900	PM	2	0	0
11/28/94	2100	PM	2	0	0
11/28/94	1300	PM	2	0.01	10
11/28/94	1700	PM	2	0	0
11/28/94	822	PM	2	0	0
11/28/94	600	PM	2	0	0
11/28/94	400	PM	2	0	0
11/28/94	200	PM	2	0	0
11/28/94	2300	PM	2	0	0
11/28/94	1100	PM	2	0	0
11/28/94	1900	PM	3	0	0
11/28/94	1300	PM	3	0.01	10
11/28/94	841	PM	3	0.01	10
11/28/94	400	PM	3	0.01	10
11/28/94	200	PM	3	0.01	10
11/28/94	2100	PM	3	0	0
11/28/94	1700	PM	3	0	0
11/28/94	1500	PM	3	0	0
11/28/94	1100	PM	3	0	0
11/28/94	600	PM	3	0	0
11/28/94	2300	PM	3	0	0
11/29/94	340	PM	1	0	0
11/29/94	1000	PM	1	0	0
11/29/94	1200	PM	1	0	0
11/29/94	300	PM	1	0	0
11/29/94	100	PM	1	0	0
11/29/94	800	PM	1	0	0
11/29/94	600	PM	1	0	0
11/29/94	1000	PM	2	0.04	40
11/29/94	1200	PM	2	0.04	40
11/29/94	825	PM	2	0	0
11/29/94	600	PM	2	0	0
11/29/94	340	PM	2	0	0
11/29/94	300	PM	2	0	0
11/29/94	100	PM	2	0	0
11/29/94	1200	PM	3	0	0
11/29/94	300	PM	3	0	0
11/29/94	340	PM	3	0	0
11/29/94	600	PM	3	0	0
11/29/94	830	PM	3	0	0
11/29/94	1000	PM	3	0	0
11/29/94	100	PM	3	0	0

PRELIMINARY

Table 2
U.S. Army Corps of Engineers Omaha District
Seneca Army Depot, Romulus, New York
Comparison of Direct-read, PM-10 and TSP-Lead Results

Date Sampled	Station Number	Average Direct-read Result (ug/m3)	PM-10 Result (ug/m3)	TSP-Lead Result (ug/m3)
10/18/94	2	0.0	24.67	0.0240
10/18/94	3	0.0	23.28	ND
10/19/94	2	0.0	23.38	0.0182
10/19/94	3	0.0	24.57	0.0148
10/20/94	1	0.0	13.63	ND
10/20/94	2	0.0	6.13	ND
10/20/94	3	0.0	14.22	ND
10/28/94	1	0.0	16.10	0.0191
10/28/94	2	0.0	18.12	0.0138
10/28/94	3	130.0	17.01	ND
10/31/94	1	0.0	17.16	ND
10/31/94	2	300.0	19.62	ND
10/31/94	3	0.0	17.31	ND
11/1/94	1	0.0	5.54	ND
11/1/94	2	0.0	6.64	ND
11/1/94	3	0.0	5.85	ND
11/2/94	1	0.0	10.66	ND
11/2/94	2	0.0	16.88	ND
11/2/94	3	80.0	14.98	ND
11/3/94	1	0.0	19.88	ND
11/3/94	2	40.0	19.40	ND
11/3/94	3	386.7	19.19	ND
11/16/94	1	66.7	25.10	ND
11/17/94	1	94.0	95.33	ND
11/17/94	2	0.0	11.11	ND
11/18/94	1	71.7	16.18	ND
11/18/94	2	0.0	29.01	ND
11/18/94	3	20.0	17.55	ND
11/19/94	1	90.0	12.45	ND
11/19/94	2	14.6	50.29	ND
11/19/94	3	81.5	35.84	ND
11/20/94	1	45.0	147.28	ND
11/20/94	2	35.8	9.63	ND
11/20/94	3	75.8	8.37	ND
11/21/94	1	63.0	56.76	ND
11/21/94	2	19.0	14.32	ND

ND - Not Detected

PRELIMINARY

Table 2
U.S. Army Corps of Engineers Omaha District
Seneca Army Depot, Romulus, New York
Comparison of Direct-read, PM-10 and TSP-Lead Results

Date Sampled	Station Number	Average Direct-read Result (ug/m3)	PM-10 Result (ug/m3)	TSP-Lead Result (ug/m3)
11/21/94	3	8.0	18.22	ND
11/22/94	1	1.8	3.22	ND
11/22/94	2	14.5	28.97	ND
11/22/94	3	0.0	55.54	ND
11/23/94	1	12.7	<0.14	ND
11/23/94	2	54.5	299.50	0.027
11/23/94	3	26.4	11.01	ND
11/24/94	1	0.0	4.30	ND
11/24/94	2	54.2	16.50	ND
11/24/94	3	14.2	38.69	ND
11/25/94	1	0.0	2.43	ND
11/25/94	3	266.2	78.33	ND
11/26/94	1	0.0	6.83	ND
11/26/94	2	2.7	8.81	ND
11/26/94	3	10.9	0.12	ND
11/27/94	2	0.0	5.96	ND
11/27/94	3	14.2	1.92	ND
11/28/94	1	21.8	4.54	ND
11/28/94	2	0.9	4.80	ND
11/28/94	3	3.6	15.87	ND

ND - Not Detected

PRELIMINARY

INTERNATIONAL TECHNOLOGY CORPORATION

Memorandum

To: Greg Hoover-USACE
Denzie White-USACE
Robert Rushing-IT Corporation

Date: January 30, 1995

From: David Buzzelli-IT Corporation
Pete Coutts-IT Corporation File

Subject: Lime Addition to Pretreated Material

I spoke with Kamal Gupta (NYSDEC-Albany) on 1/27/95 regarding the addition of a 1% agricultural lime admix to the pretreated soil to improve material handling through the LTTD's process feed system. We discussed the ongoing problems resulting from attempting to run highly saturated soil containing a high percentage of clay through the LTTD material feed system. I also explained to him that ambient temperatures were above freezing prohibiting us from implementing our original plan (processing frozen material). The 1% agricultural lime (CaO) admix would not alter the pH of the material nor would there be the "heat of hydration" problem associated with quick lime (CaOH).

Kamal agreed to a 1% addition of agricultural lime (CaO) to the pretreated material. The agricultural lime physically alters the plasticity of the clay causing the material to break up which allows excess water to evaporate.

cc: Doug Wehner

INTERNATIONAL TECHNOLOGY CORPORATION

Memorandum

To: Greg Hoover-USACE
Denzie White-USACE
Robert Rushing-IT Corporation

Date: January 31, 1995

From: David Buzzelli-IT Corporation

Pete Coutts-IT Corporation

Subject: Treated Water Discharge

I have requested authorization from Brian Baker (NYSDEC-Division of Water) to modify our existing proceedure for treating and discharging water generated as a result of ongoing dewatering operations. We have previuosly been successfully treating wastewater at a flow rate of approximately 40-45 gpm. Given the apparent elevated volatile organic concentrations in the pretreated water from the Area A excavation, and lower water temperatures, removal efficiencies for the air stripper have been reduced accordingly.

Treated water discharge criteria have been exceeded for the same 2 constituents (1,2-Dichloroethene, and TDS) on two separate occasions. TDS has been dismissed as a significant concern at this point because when discharged, the water will be naturally filtered as it infiltrates through the overburden soils prior to reaching the water table. As a result, IT has requested and received approval to to treat and discharge water in the following manner.

Water treatment flow rates will be reduced from 40-45 gpm to approximately 25 gpm in an effort to acheive proper removal efficiences for volatile organic compounds. Treated water will be sampled and analyzed for the constituents outlined in our existing discharge permit. In the event that the treated water does not meet discharge requirements after this initial treatment, the treated water will be retreated through the system and discharged directly to the ground surface. A confirmatory sample will be taken from the end of the treatment train and analyzed for the constituents which previously exceeded discharge criteria. Analytical results from the second treatment will not be required prior to discharge.

Variations on exact handling proceedures for the retreated water are permitted; however, at a minimum, we are required to retreat and sample for the failed constituents prior to discharge.

cc: Doug Wehner

INTERNATIONAL TECHNOLOGY CORPORATION

Memorandum

To: Greg Hoover-USACE
Denzie White-USACE
Robert Rushing-IT Corporation

Date: January 31, 1995

From: Dave Buzzelli-IT Corporation
Pete Coutts-IT Corporation

Subject: Excavation in Monitoring Well (MW-44) Area

Kamal Gupta (NYSDEC-Albany) had a previous request from Randy Battaglia (SEDA) to be present on site when we were excavating the bend-in-the-road area in Area A (the area represented by MW-44). I informed him that we had already excavated that area and would probably begin backfilling the area with treated material sometime next week. I told him that we would photograph the excavation floor prior to backfilling operations.

At this time, he informed me that he would not be present prior to backfilling the area.

cc: Doug Wehner

INTERNATIONAL TECHNOLOGY CORPORATION

February 2, 1995

Mr. Kamal K. Gupta
Div. of Hazardous Waste Remediation
New York State Department
of Environmental Conservation
Room 208
50 Wolf Road
Albany, New York 12233-7010

Project No. 519200

Seneca Army Depot Activity Ash Landfill Immediate Response Measure-
Completion of PM_{10} & TSP Monitoring

Dear Mr. Gupta:

IT Corporation (IT) is currently implementing an Immediate Response Measure (IRM) for the Ash Landfill site at the Seneca Army Depot Activity (SEDA) in Romulus, New York. As part of this program, ambient air monitoring stations have been located at the perimeter of the project site to assist in measuring the dispersion of volatile organic compounds (VOCs) and particulate matter generated from project activities. These monitoring stations have been in operation since the initiation of intrusive activities at the site on October 18, 1994. The perimeter monitoring stations include PM_{10} samplers, total suspended particulate (TSP) samplers, direct-read VOC monitors, and direct-read particulate monitors.

Pursuant to IT's letter to the USACE requesting termination of the sampling activities, dated January 25, 1995, IT wishes to discontinue PM_{10} and TSP perimeter monitoring on or before **Saturday, February 11, 1995**. IT has received verbal approval for this action from yourself, Mr. Dan Geraghty of the New York State Department of Health (NYSDOH), and Mr. Andrew Winslow of the U.S. Army Corps of Engineers (USACE), Omaha District. IT will continue to perform direct-read monitoring for VOCs and particulate matter at the perimeter stations as specified in the project Air Monitoring Plan.

For your reference, the PM_{10}/TSP/Direct-read comparison table originally attached to the January 25, 1995 letter is included.

At this time, IT requests written authorization from the NYSDEC to confirm the verbal approvals given to discontinue the PM_{10} and TSP sampling activities at the SEDA Ash Landfill site. As stated above, we currently plan to discontinue PM_{10} and TSP sampling operations on or before Saturday, February 11, 1995.

Regional Office
140 Allen's Creek Road • Suite 150 • Rochester, New York 14618 • 716-271-6430

IT Corporation is a wholly owned subsidiary of International Technology Corporation

Please contact the undersigned at (716) 271-6430 if you have any questions or comments. IT wishes to thank you ahead of time and appreciates your prompt and timely response to this issue.

Respectfully Submitted,

IT CORPORATION

Jeffrey D. Korb
Technical Manager- Air

Peter W. Coutts
Project Technical Manager

JDK:PWC:jk
Attachments

cc: Mr. Daniel Geraghty, NYSDOH, Bureau of Env. Exposure Investigation
Mr. Robert Scott, NYSDEC, Region 8 Office
Mr. Andrew Winslow- U.S. Army Corps of Engineers, Omaha District
Mr. Greg Hoover, U.S. Army Corps of Engineers, Romulus, N.Y.
Mr. Randall Battaglia- U.S. Army, Seneca Army Depot
Mr. Douglas Wehner- IT Corporation
Mr. Robert Rushing- IT Corporation
Ms. Carla Struble- U.S. EPA Region II

Table 2
U.S. Army Corps of Engineers Omaha District
Seneca Army Depot, Romulus, New York
Comparison of Direct-read, PM-10 and TSP-Lead Results

Date Sampled	Station Number	Average Direct-read Result (ug/m3)	PM-10 Result (ug/m3)	TSP-Lead Result (ug/m3)
10/18/94	2	0.0	24.67	0.0240
10/18/94	3	0.0	23.28	ND
10/19/94	2	0.0	23.38	0.0182
10/19/94	3	0.0	24.57	0.0148
10/20/94	1	0.0	13.63	ND
10/20/94	2	0.0	6.13	ND
10/20/94	3	0.0	14.22	ND
10/28/94	1	0.0	16.10	0.0191
10/28/94	2	0.0	18.12	0.0138
10/28/94	3	130.0	17.01	ND
10/31/94	1	0.0	17.16	ND
10/31/94	2	300.0	19.62	ND
10/31/94	3	0.0	17.31	ND
11/1/94	1	0.0	5.54	ND
11/1/94	2	0.0	6.64	ND
11/1/94	3	0.0	5.85	ND
11/2/94	1	0.0	10.66	ND
11/2/94	2	0.0	16.88	ND
11/2/94	3	80.0	14.98	ND
11/3/94	1	0.0	19.88	ND
11/3/94	2	40.0	19.40	ND
11/3/94	3	386.7	19.19	ND
11/16/94	1	66.7	25.10	ND
11/17/94	1	94.0	95.33	ND
11/17/94	2	0.0	11.11	ND
11/18/94	1	71.7	16.18	ND
11/18/94	2	0.0	29.01	ND
11/18/94	3	20.0	17.55	ND
11/19/94	1	90.0	12.45	ND
11/19/94	2	14.6	50.29	ND
11/19/94	3	81.5	35.84	ND
11/20/94	1	45.0	147.28	ND
11/20/94	2	35.8	9.63	ND
11/20/94	3	75.8	8.37	ND
11/21/94	1	63.0	56.76	ND
11/21/94	2	19.0	14.32	ND

ND - Not Detected

Table 2
U.S. Army Corps of Engineers Omaha District
Seneca Army Depot, Romulus, New York
Comparison of Direct-read, PM-10 and TSP-Lead Results

Date Sampled	Station Number	Average Direct-read Result (ug/m3)	PM-10 Result (ug/m3)	TSP-Lead Result (ug/m3)
11/21/94	3	8.0	18.22	ND
11/22/94	1	1.8	3.22	ND
11/22/94	2	14.5	28.97	ND
11/22/94	3	0.0	55.54	ND
11/23/94	1	12.7	<0.14	ND
11/23/94	2	54.5	299.50	0.027
11/23/94	3	26.4	11.01	ND
11/24/94	1	0.0	4.30	ND
11/24/94	2	54.2	16.50	ND
11/24/94	3	14.2	38.69	ND
11/25/94	1	0.0	2.43	ND
11/25/94	3	266.2	78.33	ND
11/26/94	1	0.0	6.83	ND
11/26/94	2	2.7	8.81	ND
11/26/94	3	10.9	0.12	ND
11/27/94	2	0.0	5.96	ND
11/27/94	3	14.2	1.92	ND
11/28/94	1	21.8	4.54	ND
11/28/94	2	0.9	4.80	ND
11/28/94	3	3.6	15.87	ND

ND - Not Detected

INTERNATIONAL TECHNOLOGY CORPORATION

TRANSMITTAL LETTER

IT Corporation
140 Allens Creek Road
Suite 150
Rochester, New York 14618
(716) 271-6430

February 24, 1995

Dear Sirs and Madam:

Please find enclosed the final version of the Mid-Project Data Report. This document is submitted as part of the Ash Landfill Immediate Response Measure- Phase 2 project at the Seneca Army Depot Activity, Romulus, New York under Contract No. DACW45-94-D-0054, Delivery Order No. 01.

The Mid-Project Data Report presents the results of project sampling activities performed at the Ash Landfill site from the completion of the Prove-Out Event on November 8, 1994 to December 17, 1994, when the project was suspended for the holiday season. Sampling activities summarized in this report include verification and confirmatory soil material sampling, water discharge sampling, perimeter monitoring sampling, and on-site meteorological data collection. This report summarizes the analytical results and other measurements over the reporting period.

Questions concerning this document can be addressed to Mr. Peter Coutts or Mr. Jeffrey Korb of IT Corporation at (716) 271-6430.

Respectfully,

IT CORPORATION

Jeffrey D. Korb
Air Technical Manager

Peter W. Coutts
Project Technical Manager

JDK:PWC:jdk
Encl.

INTERNATIONAL TECHNOLOGY CORPORATION

Memorandum

To: Andrew Winslow
U.S. Army Corps of Engineers Omaha District
Project Technical Manager

Date: February 24, 1995

From: Jeff Korb, IT Corp.
Technical Manager- Air

Subject:

SEDA Ash Landfill IRM Perimeter Air Monitoring Program- Completion of PM_{10} and TSP Sampling Activities

Perimeter monitoring stations, sited at the SEDA Ash Landfill Immediate Response Measure (IRM) project, have been collecting samples for PM_{10} and TSP for lead since the initiation of on-site activities. Recently, IT petitioned the State of New York to discontinue sampling activities for the PM_{10} and TSP monitoring based on the low levels of particulate matter seen at the perimeter stations and the ability of real-time monitors to collect representative samples in place of the PM_{10} and TSP instruments (see letter addressed to Mr. E. Bave of the USACE Omaha District office, dated 25 January 1995). IT received verbal approval for this action from the NYSDEC and NYSDOH on February 14, 1995.

This memorandum is intended to serve the purpose of informing all parties that approval to discontinue the PM_{10} and TSP sampling at the Ash Landfill project site has been received and that these monitoring activities officially concluded on February 14, 1995. The last 24-hour samples were collected on February 13th and into the morning of February 14th. No samples were started on that next day's cycle.

IT has dissembled the equipment and will be releasing it off site in the near future. Direct, real-time monitoring for particulate matter and VOCs continues at the site. If you have any questions or require additional information, please feel free to contact me, in the IT Rochester office. The phone number is (716) 271-6430.

NEW YORK STATE DEPARTMENT OF ENVIRONMENTAL CONSERVATION
50 Wolf Road, Albany, New York 12233

Langdon Marsh
Commissioner

March 8, 1995

RECEIVED
MAR 13 1995
ROCHESTER
EES

Mr. Randall Battaglia
Environmental Coordinator
Seneca Army Depot Activity
Romulus, NY 14541

Re: Seneca Army Depot Activity ID No. 850006
IRM - Ash Landfill Site

Dear Mr. Battaglia:

The New York State Department of Environmental Conservation (NYSDEC) and the New York State Department of Health (NYSDOH) have reviewed the IT Corporation's letter of February 2, 1995 regarding proposed changes to the perimeter air monitoring for the interim remedial measure being conducted at the Ash Landfill site.

Based on the monitoring results provided with the IT Corporation's letter, the NYSDEC and NYSDOH concur with the elimination of PM_{10} and total suspended particulates (TSP) samplers from the monitoring program. Air monitoring for volatile organic compounds and particulate matter at the perimeter stations will continue using direct read instruments.

If you have any questions, please call me at (518) 457-3976.

Sincerely,

Kamal Gupta
Bureau of Eastern Remedial Action
Division of Hazardous Waste Remediation

cc: D. Geraghty, NYSDOH
A. Winslow, USACE, Omaha Dist.
G. Hoover, USACE, SEAD
[illegible] Gibbs, IT Corp.
C. Struble, USEPA-Region II

INTERNATIONAL TECHNOLOGY CORPORATION

Memorandum

To: Peter Coutts, IT Corp.
Denzie White, USACE

Date: 3/31/95

From: David Buzzelli, IT Corp.

Subject: Discharge of Treated Water from Frac Tanks

Currently, treated water from the frac tanks is being discharged into the adjacent field approximately 150 feet due north of the tanks. This location is in the proximity of a groundwater plume that may be affected by the discharge and infiltration of the treated water. As a result, the water will now be discharged 600 feet further into the adjacent field and due north of the decon pad.

cc: File

DTB

INTERNATIONAL TECHNOLOGY CORPORATION

Mr. Kamal Gupta P.E. April 28, 1995

Division of Hazardous Waste Remediation
Room 223 A
New York State Department of Environmental Conservation
50 Wolf Road
Albany, New York 12233-7010

Re: **Wastewater Discharge Permit Modification**

Dear Mr. Gupta:

IT Corporation is requesting authorization to modify our existing procedure for treating and discharging wastewater generated as a result of ongoing dewatering operations. IT is currently successfully treating wastewater at a flow rate of approximately 25 gallons per minute (gpm).

Containerized water is presently treated and discharged in the following manner. Water generated from dewatering operations is collected in a covered ModuTank storage container. The water is then transferred into one (1) 20,000 gallon storage/surge tank. This water subsequently passes through a 5 micron particulate filter prior to entering the air stripper unit. The treated water then passes through a 1 micron particulate filter prior to being staged into six (6) 20,000 gallon effluent storage tanks. Treated water is discharged in 40,000 gallon batches when analytical data demonstrates that permit conditions have been met. Treated water is discharged into a topographic low area situated approximately 750 feet northeast of the treatment system.

IT Corporation is requesting to modify the above procedure from a batch operation to a continuous treatment and discharge operation. IT proposes to reduce the treatment flow rate from 25 gpm to 20 gpm and to discharge treated water directly to the topographic low area. Treated water would be sampled twice a week from the discharge line to demonstrate that permit conditions were being met. IT believes that given the history of successful treatment at 25 gpm, the increased stripper efficiency due to warmer weather conditions and higher water temperatures, that a 20 gpm treatment rate will provide a sufficient safety factor for a continuous discharge operation.

IT will request a relaxed sampling frequency in one month from approval of this modification if permit conditions have been satisfactorily met.

Regional Office
11499 Chester Road • Cincinnati, Ohio 45246-4012 • 513-782-4700 • FAX: 513-782-4807

IT Corporation is a wholly owned subsidiary of International Technology Corporation

Please call me at (607) 869-1680 if you have any questions regarding the above request.

Sincerely,

IT CORPORATION

Peter W. Coutts

Peter W. Coutts
Site Manager

INTERNATIONAL TECHNOLOGY CORPORATION

May 18, 1995

Mr. Ken Mueller
Quanterra
5815 Middlebrook Pike
Knoxville, TN 37921

IT Project No. 519200

SEDA Ash Landfill Project Phase II - Reissuance of Certificates of Analysis

Dear Mr. Mueller:

Please find enclosed the information necessary to reissue Certificates of Analysis for the listed air samples taken at SEDA by IT Corporation (IT). It was determined by IT that improper volume data were provided to Quanterra for the air samples provided on the following pages.

If you have any questions, please contact the undersigned at (716) 271-6430.

Thank you,

IT CORPORATION

Don Harrington
Project Engineer

Jeff Korb
Technical Manager
Air

PM10 Volume Corrections
for SEDA - Ash Landfill Phase II
PN: 519200

Sample Date	IT Sample ID	Lab ID	New Volume
1/4/95	SEDA-010495-1PM10A-A287450	AD7845	1240.7
1/4/95	SEDA-010495-2PM10A-A287449	AD7851	1269.7
1/4/95	SEDA-010495-3PM10A-A287448	AD7857	1190.1
1/5/95	SEDA-010595-1PM10A-A287452	AD7863	1430.3
1/5/95	SEDA-010595-2PM10A-A287451	AD7869	1630.9
1/5/95	SEDA-010595-3PM10A-A287453	AD7875	1761.9
1/6/95	SEDA-010695-1PM10A-A287454	AD7885	1665.9
1/6/95	SEDA-010695-2PM10B-A287455	AD7887	1151.0
1/6/95	SEDA-010695-3PM10A-A287456	AD7889	1873.8
1/7/95	SEDA-010795-1PM10A-A287457	AD7891	1548.8
1/7/95	SEDA-010795-2PM10B-A287458	AD7893	1736.3
1/7/95	SEDA-010795-3PM10A-A287459	AD7895	1795.5
1/8/95	SEDA-010895-1PM10A-A287462	AD7897	1789.5
1/8/95	SEDA-010895-2PM10B-A287461	AD7899	1669.7
1/8/95	SEDA-010895-3PM10A-A287460	AD7901	1836.3
1/9/95	SEDA-010995-1PM10A-A287465	AD7903	2353.5
1/9/95	SEDA-010995-2PM10B-A287464	AD7904	2294.3
1/9/95	SEDA-010995-3PM10A-A287463	AD7906	2450.4
1/10/95	SEDA-011095-1PM10A-287691	AD7908	1101.4
1/10/95	SEDA-011095-2PM10B-287692	AD7910	1164.0
1/10/95	SEDA-011095-3PM10A-287693	AD7912	1255.0
1/11/95	SEDA-011195-1PM10A-287694	AD7914	1758.7
1/11/95	SEDA-011195-2PM10B-287695	AD7916	1620.1
1/11/95	SEDA-011195-3PM10A-287696	AD7918	1850.9
1/12/95	SEDA-011295-1PM10A-287697	AD7920	1794.0
1/12/95	SEDA-011295-2PM10B-287698	AD7922	1752.5
1/12/95	SEDA-011295-3PM10A-287699	AD7924	1879.2
1/13/95	SEDA-011395-1PM10A-287700	AD7926	1792.1
1/13/95	SEDA-011395-2PM10B-287701	AD7928	1672.3
1/13/95	SEDA-011395-3PM10A-287702	AD7930	1863.8
1/14/95	SEDA-011495-1PM10A-287705	AD7932	1822.5
1/14/95	SEDA-011495-2PM10B-287704	AD7934	1744.1
1/14/95	SEDA-011495-3PM10A-287703	AD7936	1933.3
1/15/95	SEDA-011595-1PM10A-287706	AD7938	1840.1
1/15/95	SEDA-011595-2PM10B-287707	AD7939	1762.8
1/15/95	SEDA-011595-3PM10A-287708	AD7940	1800.9

TSP Volume Corrections
for SEDA - Ash Landfill Phase II
PN: 519200

Sample Date	IT Sample ID	Lab ID	New Volume
11/22/94	SEDA-112295-1TSP-6201320	AD3587	4345.7
11/23/94	SEDA-112395-1TSP-6201317	AD3590	1917.7
11/24/94	SEDA-112495-1TSP-6201314	AD3593	4155.0
11/25/94	SEDA-112595-1TSP-6201313	AD3596	4767.7
11/26/94	SEDA-112695-1TSP-6201308	AD3599	3976.7
11/27/94	SEDA-112795-1TSP-6201305	AD3607	4654.3
11/28/94	SEDA-112895-1TSP-6277593	AD3605	4445.8
1/4/95	SEDA-010495-1TSP-6277525	AD7847	3066.0106
1/4/95	SEDA-010495-2TSP-6277526	AD7854	5006.7295
1/4/95	SEDA-010495-3TSP-6277527	AD7860	2923.0029
1/5/95	SEDA-010595-1TSP-6277524	AD7867	4278.8070
1/5/95	SEDA-010595-2TSP-6277523	AD7874	6597.0913
1/5/95	SEDA-010595-3TSP-6277522	AD7880	3864.8808
1/6/95	SEDA-010695-1TSP-6277521	AD7886	4386.8261
1/6/95	SEDA-010695-2TSP-6277520	AD7888	6077.3884
1/6/95	SEDA-010695-3TSP-6277519	AD7890	4348.7487
1/7/95	SEDA-010795-1TSP-6277518	AD7892	3748.3224
1/7/95	SEDA-010795-2TSP-6277517	AD7894	7215.8752
1/7/95	SEDA-010795-3TSP-6277516	AD7896	2966.0623
1/8/95	SEDA-010895-1TSP-6277513	AD7898	4467.0989
1/8/95	SEDA-010895-2TSP-6277515	AD7900	6583.4499
1/8/95	SEDA-010895-3TSP-6277514	AD7902	4200.8155
1/9/95	SEDA-010995-2TSP-6277511	AD7905	8876.4232
1/9/95	SEDA-010995-3TSP-6277512	AD7907	5783.6453
1/10/95	SEDA-011095-1TSP-6265966	AD7909	2708.2672
1/10/95	SEDA-011095-2TSP-6265967	AD7911	4424.9803
1/10/95	SEDA-011095-3TSP-6265968	AD7913	2898.8230
1/11/95	SEDA-011195-1TSP-6265969	AD7915	4164.1421
1/11/95	SEDA-011195-2TSP-6265970	AD7917	7032.2472
1/11/95	SEDA-011195-3TSP-6265971	AD7919	4937.6166
1/12/95	SEDA-011295-1TSP-6265972	AD7921	4473.0230
1/12/95	SEDA-011295-2TSP-6265973	AD7923	6845.5301
1/12/95	SEDA-011295-3TSP-6265974	AD7925	3839.5275
1/13/95	SEDA-011395-1TSP-6265975	AD7927	4083.9355
1/13/95	SEDA-011395-2TSP-6265976	AD7929	6694.6159
1/13/95	SEDA-011395-3TSP-6265977	AD7931	4493.7664
1/14/95	SEDA-011495-1TSP-6265980	AD7933	4584.5535
1/14/95	SEDA-011495-2TSP-6265979	AD7935	6775.9538
1/14/95	SEDA-011495-3TSP-6265978	AD7937	4467.2555
1/15/95	SEDA-011595-2TSP-6265982	AD7941	6763.3465

INTERNATIONAL TECHNOLOGY CORPORATION

Memorandum

To: Peter Coutts, IT Corp.
Denzie White, USACE

Date: 6/5/95

From: David Buzzelli, IT Corp.

Subject: DEMOBILIZATION AND RESTORATION ACTIVITIES

Kamal Gupta, NYSDEC, was contacted and informed that all of the excavated material has been treated through the LTTD unit. Currently, the haul road and the area designated for staging pre-treated soil is being cut one foot below grade. The material generated from these activities will be treated through the LTTD unit. Also, Kamal was informed that the disturbed area's will be re-seeded and restored. The debris has been approved by the NYSDEC for off-site removal (landfill). It is anticipated that a hauler will be selected and approved early this week, and the debris shipped off-site shortly thereafter.

cc: File

INTERNATIONAL TECHNOLOGY CORPORATION

Memorandum

To: David Buzzelli

Date: June 7, 1995

From: Jeff Korb

Subject: **Continuation of Perimeter Monitoring and Meteorological Data Collection**

As we near the completion of the treatment phase of the project, the question has arose as to whether we need to continue to operate the meteorological station and the perimeter monitoring stations at the Ash Landfill site. This memo addresses these issues and the reasoning behind the conclusions. I spoke with Mr. D. Geraghty of the NYS Dept. of Health (NYSDOH) today to confirm their position. The discussion below reflects the direction and opinion of the NYSDOH and NYSDEC on this matter.

Perimeter Monitoring Stations

Monitoring activities at the perimeter stations includes real-time VOC and particulate matter sampling, occurring continuously for each 24-hour period. The VOC sampling is being conducted to monitor potential migration of volatile compounds off the project site due to project operations such as the LTTD treatment operations, soil storage, and excavation activities. When these activities are fully completed, VOC monitoring may be discontinued. The VOC samplers can be dismantled and removed from the site.

Particulate matter monitoring at the perimeter stations is also continuing at this time. Real-time particulate monitoring is being performed because of the potential for dust and particulate matter created by site activities may migrate off-site, similar to the VOCs. Site activities pertinent to this include the LTTD system operation, excavation and related activities, soil material staging and storage, backfilling, grading, and other ground material disturbance-type tasks that can create dust in the air. Particulate matter sampling at the perimeter stations must continue until all of the types of activities listed above (at a minimum) are completed and dust generation at the project site is minimal. My estimation is that this will be appropriate until the re-seeding task is completed and all structures are removed from the area. The NYSDOH has requested that we do this.

Meteorological Data Collection

The collection of meteorological data, including wind speed, wind direction, temperature,

precipitation and other parameters, is important to the understanding of the local atmosphere and its behavior. The meteorological station is required when the perimeter monitoring stations are operational.

At the completion of the project and associated activities, the remaining perimeter monitoring equipment and scaffolding can be removed from the site. At this same time, the meteorological station can be dismantled and returned to the vendor. I will plan to coordinate with you and Denzie on appropriate staffing, contacting vendors, organizing any required shipping arrangements, and any other tasks in the last few on-site days of this project.

I hope this memo provides you with adequate information. Please call me if you have questions.

cc: Doug Wehner, IT-Cincinnati

INTERNATIONAL TECHNOLOGY CORPORATION

June 7, 1995

Mr. Daniel Geraghty
Bureau of Env. Exposure Investigation
New York State Department of Health
Room 205
2 University Place
Albany, New York 12203-3313

Dear Mr. Geraghty:

Per our telephone conversations, this letter is being sent to request a downgrade in air monitoring requirements for the Seneca Army Depot Activity (SEDA) Ash Landfill VOC Removal Action project in Romulus, New York. The project in question has finished treatment actions and only demobilization and final site restoration activities remain to be completed. We at IT expect these tasks to require 2-3 weeks of on-site work before all phases of site activity are acccomplished.

In downgrading the air monitoring requirements, IT and the U.S. Army Corps of Engineers, Omaha District request approval for the following steps:

- Discontinuation of all VOC monitoring at the site except for worker health and safety purposes as necessary;
- Dismantling of the three (3) perimeter monitoring stations and instituting mobile monitoring around the perimeter of the site, where dust monitor will be stationed during downwind from dust-creating project activities as needed; and,
- Continuing real-time particulate matter on a periodic basis [every two (2) hours] at the site perimeter.

With approval and implementation of these actions, IT will continue to administer appropriate dust suppression and dust control methods for the remainder of the project. At this time, we do not anticipate the creation of excessive dust levels from any project activity. We appreciate your timely response to this request. If you have any questions concerning this request, please contact Mr. Jeffrey Korb of IT Corporation at (716) 271-6430.

Respectfully,

IT CORPORATION

Jeffrey D. Korb
Air Technical Manager

Don Harrington
For
Peter W. Coutts
Project Technical Manager

C:\JDK\SEDA\NYSDOH\Penm.607

STATE OF NEW YORK
DEPARTMENT OF HEALTH

Office of Public Health II University Place Albany, New York 12203-3399

Barbara A. DeBuono, M.D., M.P.H.
Commissioner

Karen Schimke
Executive Deputy Commissioner

June 12, 1995

Mr. Jeffery Korb
International Technology Corporation
140 Allen's Creek Road
Suite 150
Rochester, New York 14618

RE: Seneca Army Depot
Ash Landfill
Romulus, Seneca County
Site ID # 850006

Dear Mr. Korb:

I have reviewed the proposed changes for downgrading the air monitoring procedures at the referenced site which you outline in your June 7, 1995 letter. I understand the changes to include the dismantling of the three permanent air monitoring stations and that real-time particulate monitoring at the site perimeter will be conducted every two hours until demobilization is complete. In addition, dust control measures will continue to be administered during the final stages of this project.

Based on the fact that the completion of the Interim Remedial Measure using low temperature thermal desorption has occurred, I concur with your recommendations. If you have any questions, you may contact me at 518-458-6309.

Sincerely,

Daniel R. Geraghty
Environmental Health Specialist I
Bureau of Environmental Exposure
Investigation

drg95158PRO0464

cc: Dr. G.A. Carlson
Mr. A. Wakeman/Mr. M. Rivara
Dr. O. Smith-Blackwell - WRO
Mr. D. Napier - RFO
Mr. K. Gupta - DEC
Mr. B. Dombrowski - SCHD
Ms. M.J. Peachey - DEC Reg 8

RECEIVED
JUN 15 1995
ROCHESTER
EES

INTERNATIONAL TECHNOLOGY CORPORATION

Memorandum

To: Frank Ricotta, NYSDEC

Date: 6/19/95

From: David Buzzelli, IT Corp.

Subject: Seneca Army Depot, Ash Landfill Project, Water Discharge into the SEDA POTW

As per Peter Coutts', IT Corporation Project Supervisor, request this memorandum is to inform you that water generated from site activities is being discharged into the Seneca Army Depot (SEDA) POTW. This water is representative of water sampled and discharged into the SEDA POTW at the beginning of the project. Water generated from site activities is currently being stored in one of three 600 gallon poly tanks. These poly tanks DO NOT contain groundwater generated from excavation activities. The excavation has since been backfilled and all containerized groundwater has been treated and discharged.

Water being collected in the poly tanks is being discharged into the same designated manway as in the beginning of the Ash Landfill project. This manway was located and confirmed by Butch Leonard, Seneca Army Depot POTW.

If you have any questions or concerns please call the SEDA Ash Landfill site at (607) 869-1680 or x-1681.

cc: File

Appendix O

Photographs

Photographic documentation in Appendix O will be forwarded with correction sheets when the Final Report document is finalized